Installation, Operation, and Maintenance Manual

2026

SB SERIES (3-18 ton)

Vertical Self-Contained Units

The information in this document is subject to change. Printed versions may not reflect the most current updates. Please ensure that you have the most recent version prior to referencing any information within the document. Visit www.aaon.com to confirm your version is up to date, or to download the most recent version.

R-454B

Conforms to UL STDs 60335-1 and 60335-2-40

Rev D Version 20260915

This Page Intentionally Left Blank

TABLE OF CONTENTS

1. SAFETY 1
2. NOTES, CAUTIONS, AND WARNINGS 3
3. AAON SB SERIES FEATURES AND OPTIONS INTRODUCTION 12
4. SB SERIES FEATURE STRING NOMENCLATURE 13
   - 4.1. SB Series Feature String Description 13
5. GENERAL INFORMATION 20
   - 5.1. Certification of Steam or Hot Water Heat Models 20
   - 5.2. Certification of Electric Heat Models 20
   - 5.3. Certification of Cooling Models 20
   - 5.4. Codes and Ordinances 21
   - 5.5. Receiving Unit 21
   - 5.6. Storage 22
   - 5.7. Direct Expansion (DX) Systems 22
   - 5.8. Wiring Diagrams 23
   - 5.9. Condensate Drain Pans 23
6. INSTALLATION 24
   - 6.1. Locating the Unit 24
   - 6.2. Lifting and Handling the Unit 25
   - 6.3. Unit Assembly 25
   - 6.4. Refrigerant-to-Water Heat Exchanger Water Piping 28
   - 6.5. Electrical 33
   - 6.6. Duct Connection 37
   - 6.7. Condensate Drain Piping 37
   - 6.8. Waterside Economizer 38
   - 6.9. Heating Coils 39
   - 6.10. Energy Recovery Units 40
   - 6.11. Air Seals 46
   - 6.12. Wheel Drive Components 46
7. STARTUP 52
   - 7.1. Supply Fans 52
   - 7.2. Fan Set Screws Adjustment 52
   - 7.3. Fan Air Flow Adjustment 53
   - 7.4. Filters 54
   - 7.5. Adjustment Refrigerant Charge 54
   - 7.6. Freeze Stat Startup 55

8. OPERATION 60
8.1. Refrigerant Detection System 60
8.2. Packaged DX Cooling Operation and Control 61
8.3. Electric Heating Operation 61
8.4. Steam or Hot Water Preheating Operation 61
9. MAINTENANCE 62
9.1. Refrigerant Removal and Evacuation 63
9.2. DX Cooling 64
9.3. Condensate Drain Pan 64
9.4. E-Coated Coil Cleaning 65
9.5. Supply Fans 67
9.6. Filter Replacement 67
9.7. UV Lights 67
9.8. Filter Information 68
9.9. Replacement Parts 70
9.10. Decommissioning 70
10. WARRANTY 72
11. SB SERIES STARTUP FORMS 73
11.1. Pre-Startup Checklist 73
11.2. A2L Refrigerant Detection System (RDS) Pre-Start Checklist 74
11.3. Ambient Temperature 74
11.4. Voltage 74
11.5. Supply Fan Assembly 74
11.6. Compressors/DX Cooling 74
11.7. Refrigeration Systems Cooling Mode 75
11.8. Refrigeration Systems Heating Mode 75
11.9. Unit Configuration 75
11.10. Water/Glycol System 75
11.11. Mixing Box Dampers 76
11.12. Electric Heating 76
11.13. Additional Findings 77
11.14. Signature 77
12. APPENDIX A: UNIT SAFETY HIERARCHY 78
13. APPENDIX B: HEAT EXCHANGER CORROSION RESISTANCE 79
14. APPENDIX C: MAINTENANCE LOGS 81
15. APPENDIX D: MAINTENANCE LOG (E-COATED COIL) 82
16. LITERATURE CHANGE HISTORY 83

TABLE OF FIGURES

Figure 1: Lockable Handle 21
Figure 2: SB Series 24
Figure 3: SB Series Unit Orientation 25
Figure 4: SB Schematic with (1) Exhaust Fan, (2) Energy Recovery, (3) Air Handler, and (4) Compressor Section 26
Figure 5: Connect Sections 26
Figure 6: Bar Clamp 26
Figure 7: Flange Overlap 26
Figure 8: Self-Tapping Screw 26
Figure 9: Strap Types 27
Figure 10: Low Voltage Quick Connect 27
Figure 11: Ship Split Sections 28
Figure 12: Water Connections for Water-Source Heat Pumps 31
Figure 13: Electrical Connection 34
Figure 14: Drain Trap 37
Figure 15: Energy Recovery Wheel 40
Figure 16: Cross Section of Air Seal Structure 41
Figure 17: Wheel Adjusting Screws 42
Figure 18: Purge Angle Gauge 42
Figure 19: Wheel Adjusting Screws Can Be Used to Adjust the Purge Seal 42
Figure 20: Lifting Hole Locations 43
Figure 21: Diameter Seal Adjustment 46
Figure 22: Avoid Racking of Cassette Frame 47
Figure 23: Diameter Seal Adjustment 48
Figure 24: Hub Seal Adjustment 48
Figure 25: Segment Retainers 49
Figure 26: Segment Installation 49
Figure 27: Belt Replacements 51
Figure 28: Plenum Fan Gap Tolerances 52
Figure 29: Typical Wiring Diagram with EC Motor 53
Figure 30: Shows the Jumper That Is to Be Removed (Jumped Between S1 And S2) 53
Figure 31: Typical Wiring Diagram with VFD PM motor 53
Figure 32: Unit Safety Hierarchy 78
Figure 33: A2L Priority Jumper 78
Figure 34: Building Smoke Control Priority Jumper 78

TABLE OF TABLES

Table 1: SB Series Clearances 24
Table 2: Clearances for Coil Pull 24
Table 3: Glycol Concentration Freezing Points (Metric) 30
Table 4: Glycol Concentration Freezing Points (Imperial) 30
Table 5: Condenser Water Connections 30
Table 6: Water Connection Locations 31
Table 7: Nameplate Voltage Markings and Tolerances 33
Table 8: Control Wiring 36
Table 9: 35 KAIC Fuse Sizing 36
Table 10: 65 KAIC Fuse Sizing 36
Table 11: Drain Trap Dimensions (Metric) 38
Table 12: Drain Trap Dimensions (Imperial) 38
Table 13: Energy Recovery Wheel Cleaning Frequency 44
Table 14: Plenum Fan Set Screw Specifications 52
Table 15: Acceptable Water-Cooled Refrigeration Circuit Values (Metric) 55
Table 16: Acceptable Water–Cooled Refrigeration Circuit Values (Imperial) 55
Table 17: Minimum Airflow and Room Areas 56
Table 18: Minimum Airflow and Room Areas (Continued) 57
Table 19: Min and Max Charge per Cabinet Size 57
Table 20: R-454B Refrigerant Temperature-Pressure Chart (Metric) 58
Table 21: R-454B Refrigerant Temperature-Pressure Chart (Imperial) 59
Table 22: 3–5 ton (B Cabinet) Pre and Unit Filters 68
Table 23: 6–10 ton (C Cabinet) Pre and Unit Filters 68
Table 24: 14–18 ton (D Cabinet) Pre and Unit Filters 68
Table 25: 3–5 ton (B Cabinet) Mixing Box Filters 69
Table 26: 6–10 ton (C Cabinet) Mixing Box Filters 69
Table 27: 14–18 ton (D Cabinet) Mixing Box Filters 69
Table 28: Filter Conversation Table 69

1. SAFETY

Attention must be paid to the following statements:

Startup and service must be performed by a Factory-Trained Service Technician competent in working with flammable refrigerants.

Every unit has a unique equipment nameplate with electrical, operational, and unit clearance

specifications. Refer to the unit nameplate for specific ratings unique to the model purchased.

Install this appliance in accordance with local codes. In the absence of local codes, install in accordance with ASHRAE 15, ASHRAE 15.2, IAPMO Uniform Mechanical Code, ICC International Mechanical Code, or CSA B52.

Note: Read the entire installation, operation, and maintenance manual. Other important safety precautions are provided throughout this manual.

Keep this manual and all literature safeguarded near or on the unit.

This product is designed for the use of R-454B refrigerant only. The use of any other refrigerant in this product is not covered under ETL listing and will void the warranty.

This Page Intentionally Left Blank

2. NOTES, CAUTIONS, AND WARNINGS

Note: Notes are intended to clarify the unit installation, operation, and maintenance.

CAUTION

Caution statements are given to prevent actions that may result in equipment damage, property damage, or personal injury.

WARNING

Warning statements are given to prevent actions that may result in equipment damage, property damage, or serious injury.

DANGER

Danger statements are given to prevent actions that may result in equipment damage, property damage, and severe personal injury or death.

WARNING

Electric Shock, Fire, or Explosion Hazard:
Failure to follow safety warnings could result in dangerous operation, serious injury, death, or property damage.

Improper servicing could result in dangerous operation, serious injury, death, or property damage.

- Before servicing, disconnect all electrical power to the furnace. More than one disconnect may be provided.
- When servicing controls, label all wires prior to disconnecting. Reconnect wires correctly after servicing.
- Verify proper operation after servicing. Secure all doors with a key lock or a nut and bolt.

WARNING

Electric shock hazard. Before servicing, shut off all electrical power to the unit, including remote disconnects, to avoid shock hazard or injury from rotating parts. Follow proper Lockout-Tagout procedures.

WARNING

Fire, Explosion, or Carbon Monoxide Poisoning Hazard:
Failure to replace proper controls could result in fire, explosion, or carbon monoxide poisoning. Failure to follow safety warnings exactly could result in serious injury, death, or property damage. Do not store or use gasoline or other flammable vapors and liquids in the vicinity of this appliance.

WARNING

Carbon Monoxide Poisoning Hazard:
Failure to follow instructions could result in severe personal injury or death due to carbon-monoxide poisoning if combustion products infiltrate into the building.

Check that all openings in the outside wall around the vent (and air intake) pipe(s) are sealed to prevent infiltration of combustion products into the building.

Check that the furnace vent (and air intake) terminal(s) are not obstructed in any way during all seasons.

WARNING

During installation, testing, servicing, and troubleshooting of the equipment, it may be necessary to work with live electrical components. Only a qualified licensed electrician or an individual properly trained in handling live electrical components shall perform these tasks.

Standard NFPA-70E, an OSHA regulation requiring an Arc Flash Boundary to be field established and marked for identification of where appropriate Personal Protective Equipment (PPE) be worn, must be followed.

WARNING

Grounding Required:
All field installed wiring must be completed by qualified personnel. Field installed wiring must comply with NEC/CEC, local and state electrical code requirements. Failure to follow code requirements could result in serious injury or death. Provide proper unit ground in accordance with these code requirements.

WARNING

Rotating Components:
The unit contains fans with moving parts that can cause serious injury. Do not open the door containing fans until the power to the unit has been disconnected and the fan wheel has stopped rotating.

WARNING

Unit Handling:
To prevent injury or death lifting equipment capacity shall exceed the unit weight by an adequate safety factor. Always test-lift the unit not more than 61 centimeters (24 inches) high to verify the proper center of gravity lift point to avoid unit damage, injury, or death.

CAUTION

Failure to properly drain and vent coils when not in use during freezing temperatures may result in coil and equipment damage.

WARNING

Do not use oxygen, acetylene, or air in place of refrigerant and dry nitrogen for leak testing. A violent explosion may result causing injury or death.

CAUTION

Rotation must be checked on all Motors and Compressors of three phase units at startup by a qualified service technician. Scroll compressors are directional and can be damaged if rotated in the wrong direction. Compressor rotation must be checked using suction and discharge gauges. Fan motor rotation must be checked for proper operation. Alterations must only be made at the unit power connection

WARNING

Always use a pressure regulator, valves, and gauges to control incoming pressures when pressure testing a system. Excessive pressure may cause line ruptures, equipment damage, or an explosion, which may result in injury or death.

WARNING

Water Pressure:
Prior to connection of condensing water supply, verify water pressure is less than the maximum pressure of 2068.4 kPa (300psi). To prevent injury or death due to the instantaneous release of high-pressure water, relief valves must be field supplied on system water piping.

WARNING

Do not work in a closed area where refrigerant or nitrogen gases may be leaking. A sufficient quantity of vapors may be present and cause injury or death.

WARNING

Do not use a torch or other potential ignition source to detect refrigerant leaks. Use only an electronic detector suitable for the refrigerant, or the bubble method with a chlorine free detergent.

CAUTION

Do not clean DX refrigerant coils with hot water or steam. The use of hot water or steam on refrigerant coils will cause high pressure inside the coil tubing and damage to the coil.

WARNING

If a refrigerant leak is detected, remove/extinguish all sources of open flame. If repairing a refrigerant leak requires brazing, remove all refrigerant before beginning brazing.

CAUTION

To prevent damage to the unit, do not use acidic chemical coil cleaners. Do not use alkaline chemical coil cleaners with a pH value greater than 8.5, after mixing, without first using an aluminum corrosion inhibitor in the cleaning solution.

CAUTION

Cleaning the cooling tower or the condenser water loop with harsh chemicals, such as hydrochloric acid (muriatic acid) or chlorine, can damage the water-cooled condenser. Care must be taken to avoid allowing chemicals to enter the water-cooled condenser. See Appendix A - Heat Exchanger Corrosion Resistance for more information.

WARNING

Some chemical coil cleaning compounds are caustic or toxic. Use these substances only in accordance with the manufacturer's usage instructions. Failure to follow instructions may result in equipment damage, injury, or death.

WARNING

Open Loop Applications:
Failure of the condenser as a result of chemical corrosion is excluded from coverage under AAON Inc. warranties and the heat exchanger manufacturer's warranties.

CAUTION

Door compartments containing hazardous voltage or rotating parts are equipped with door latches to allow locks. Door latches are shipped with nuts and bolts requiring tooled access. If you do not replace the shipping hardware with a padlock, always reinstall the nut & bolt after closing the door.

WARNING

Water Freezing:
Failure of the condenser due to freezing will allow water to enter the refrigerant circuit and will cause extensive damage to the refrigerant circuit components. Any damage to the equipment as a result of water freezing in the condenser is excluded from coverage under AAON warranties and the heat exchanger manufacturer's warranties.

CAUTION

Unit power supply wire must only be copper or aluminum.

CAUTION

PVC (Polyvinyl Chloride) and CPVC (Chlorinated Polyvinyl Chloride) are vulnerable to attack by certain chemicals. Polyolester (POE) oils used with R-454B and other refrigerants, even in trace amounts, in a PVC or CPVC piping system will result in stress cracking of the piping and fittings and complete piping system failure.

WARNING

Compressor Cycling:

3 Minute Minimum Off Time - To prevent the motor from overheating, compressors must cycle off for a minimum of 3 minutes.

5 Minute Minimum on Time - To maintain the proper oil level, compressors must cycle on for a minimum of 5 minutes.

The cycle rate must not exceed 7 starts per hour.

WARNING

This appliance is not intended for use by persons with reduced physical, sensory, or mental capabilities, or a lack of experience and knowledge, unless they have been given supervision or instruction concerning use of the appliance by a person responsible for their safety. Children must be supervised around this appliance.

CAUTION

To avoid a hazard due to inadvertent resetting of the Thermal Cut-Out, this appliance must not be supplied through an external switching device, such as a timer, or connected to a circuit that is regularly switched on and off by the utility.

WARNING

Ensure that sufficient dampers will be open to provide an air path before the fan is allowed to run.

WARNING

Units with VFD driven motors/compressors have adjustable overload settings. These are set by the AAON factory for the protection of these motors/compressors and must not be adjusted over this factory setpoint or bypassed.

WARNING

Do not weld or cut foam panels with plasma cutters or a cutting torch; when burnt, the foam produces dangerous fumes.

WARNING

Only auxiliary devices approved by manufacturers or declared suitable with the refrigerant may be installed in ductwork.

WARNING

Connected ductwork must be free of potential ignition sources, such as hot surfaces above 700°C (1292°F) or electrical devices prone to arcing or sparking. Potential ignition sources within the ductwork may only be allowed if the minimum air velocity across these components is above 1 m/s (200 ft/min) during any point which the component can function.

WARNING

If any damage or fault to electrical equipment exists, do not provide power to the unit. If the issue cannot be resolved immediately, report the issue to the equipment owner to ensure power is not supplied before the issue is resolved.

WARNING

If a refrigerant leak is detected, remove/extinguish all sources of open flame. If repairing a refrigerant leak requires brazing, remove all refrigerant before beginning brazing.

WARNING

The appliance shall be stored in a room without continuously operating ignition sources (i.e., open flames, gas appliances, or electric heaters).

WARNING

This appliance contains a flammable refrigerant. Minimum floor area on the nameplate is based on factory charge at a ceiling/release height of 2.2 m (7.2 ft) in accordance with UL 60335-2-40. Refer to Table 16 for different allowable room areas based on other charges and ceiling/release heights. Apply the altitude adjustment factor to table values as required by local codes.

WARNING

Refrigerant Detection System activated circulation airflow. In the event of a refrigerant leak within the airstream, the indoor blower is activated to provide circulation airflow. The mitigation board is equipped with an alarm output. Wire all zone dampers and VAV boxes to alarm output to open in the event of a refrigerant leak alarm.

WARNING

If this appliance is installed to serve a conditioned area less than the minimum area as indicated in Table 17, the served space must be free of continuously operating open flames or other sources of ignition. Additional ventilation is required in accordance with ASHRAE 15.

WARNING

Ensure that there are no live electrical components or wiring exposed when adjusting charge, recovering charge, or purging the system. Ensure that the earthing continuity is unbroken.

CAUTION

Minimum circulation airflow is required to prevent stagnation of refrigerant in the event of a refrigerant leak. Zone dampers and VAV boxes must be operated to allow for minimum circulation airflow in the event of a refrigerant leak.

CAUTION

Do not use means to accelerate the defrosting process or to clean, other than those recommended in this manual.

CAUTION

Do not operate UV-C lamps outside of the unit.

CAUTION

The appliance shall be stored in a room without continuously operating ignition sources (i.e., open flames, gas appliances, or electric heaters).

CAUTION

Flammable refrigerant. Be aware that refrigerant does not contain an odor.

CAUTION

Flammable refrigerant. Do not pierce or burn tubing or refrigerant containing components.

CAUTION

Disconnect power to the unit before servicing UV-C lamps.

CAUTION

Doors and panels with access to UV-C lamps, with possible spectral irradiance exceeding 1.7 $\mu W/cm^2$ are provided with an interlock switch. Do not override.

WARNING

Units containing UV-C Germicidal lamps should not be operated with damage to the cabinet of the unit. UV-C radiation may, even in small doses, cause harm to the eyes and skin.

This Page Intentionally Left Blank

3. AAON SB SERIES FEATURES AND OPTIONS INTRODUCTION

Energy Efficiency

- Direct Drive Backward Curved Plenum Fans
- 10-100% Variable Capacity Scroll Compressors
- Double Wall Rigid Polyurethane Foam Injected Cabinet Construction
- Airside Economizers
- Modulating/SCR Electric Heat
- IE5 Efficiency Permanent Magnet (PM) Supply Fan Motors
- High Efficiency Electronically Commutated Motor (ECM) Exhaust Fans
- Coaxial Refrigerant-to-Water Heat Exchangers
- Water-Source and Geothermal Heat Pump Configuration
- Single Zone Variable Air Volume
- Energy Recovery Wheels

Indoor Air Quality

- Up to 100% Outside Air Capabilities
- Multiple High Efficiency Unit and Mixing Box Filtration Options
- Double wall construction with no exposed insulation
- Interior Corrosion Protection
- Stainless-Steel Drain Pans
- Up to MERV 14 Filtration Options

Humidity Control

- High-Capacity Cooling Coils
- Variable Capacity Compressors
- Modulating Hot Gas Reheat
- Total Energy Recovery Wheel

Safety

- Phase and Brown Out Protection
- Supply Air Smoke Detector
- Freeze Stats
- Overflow Switch

Installation and Maintenance

- Clogged Filter Switch
- Magnehelic Gauge
- Color Coded Wiring and Wiring Diagrams
- Compressor in Isolated Compartment
- Compressor Isolation Valves
- Direct Drive Supply Fans
- Hinged Access with Lockable Handles
- Compressor and Control Compartment Service Lights
- Sight Glass
- Split Configuration for Retrofit or Space Limited Applications

System Integration

- Customer Provided Controls
- Electric/Steam/Hot Water Heat
- Refrigerant-to-water Heat Exchangers
- Condensing Unit Only Options

Environment Friendly

- Airside Economizers
- R-454B Refrigerant
- Geothermal Heat Pump Configuration

Extended Life

- 5 Year Compressor Warranty
- Double Wall Rigid Polyurethane Foam Injected Cabinet Construction
- Interior Corrosion Protection
- Polymer E-Coated Coils - 5 Year Coating Warranty
- Stainless-Steel Drain Pans

4. SB SERIES FEATURE STRING NOMENCLATURE

The following is an example of the SB Series Feature String.

SB-007-3-0-L70A-000:0000-000-EF1-0A0-000000Y-E0-00A00000B

4.1. SB Series Feature String Description

4.1.1. Model Options Breakdown

GEN	SIZE	VLT	CONFIG	A1	A2	A3	A4	
SB -	007 -	3 -	0 -	L	7	0	A -	000:0000-000-EF1-0A0-000000Y-E0-00A00000B

Series and Generation

SB

Unit Size

003 = 3-ton Capacity
004 = 4-ton Capacity
005 = 5-ton Capacity
006 = 6-ton Capacity
007 = 7-ton Capacity
009 = 9-ton Capacity
010 =10-ton Capacity
014 =14-ton Capacity
016 = 16-ton Capacity
018 = 18-ton Capacity

Voltage

2 = 230V/3Φ/60Hz
3 = 460V/3Φ/60Hz
4 = 575V/3Φ/60Hz
8 = 208V/3Φ/60Hz

Configuration

0 = Right Hand Unit + Top Vertical Discharge
A = Left Hand Unit + Top Vertical Discharge

A1: Refrigerant Style

L = R-454B Variable Capacity Scroll Compressor

A2: Unit Configuration

0 = Water-Cooled Condenser - Condensing Unit Only
7 = Water-Source/Geothermal Heat Pump + Std Evap. Coil - Coaxial Heat Exchanger
8 = Water-Source/Geothermal Heat Pump + 6 Row Evap. Coil - Coaxial Heat Exchanger
9 = Water-Source/Geothermal Heat Pump - Condensing Unit Only

A3: Coil Coating

0 = Standard - None
1 = Polymer E-coated Cooling and Reheat Coils

A4: Cooling / Heat Pump Staging

0 = No Air Side
A = Modulating - Variable Capacity Compressor

4.1.2. Model Options Breakdown (Continued)

		B1	B2	B3		
SB-007-3-0-L70A	-	**0**	**0**	**0**	:	0000-000-EF1-0A0-000000Y-E0-00A00000B

B1: Heating Type

0 = No Heating
7 = Electric Heat
C = Steam Distributing Standard Coil
D = Steam Distributing Polymer E-Coated Coil
E = Hot Water Standard Coil
F = Hot Water Polymer E-Coated Coil

B2: Heating Designation

0 = No Heating
1 = 1 Row Coil
2 = 2 Row Coil
4 = 4 Row Coil
A = 7 kW (5.3 kW @ 208V)
B = 14 kW (10.5 kW @ 208V)
C = 21 kW (15.8 kW @ 208V)
D = 28 kW (21.0 kW @ 208V)
E = 35 kW (26.3 kW @ 208V)
F = 42 kW (31.5 kW @ 208V)
G = 49 kW (37.0 kW @ 208V)
H = 56 kW (42.0 kW @ 208V)
J = 63 kW (47.3 kW @ 208V)
K = 70 kW (52.5 kW @ 208V)

B3: Heating Staging

0 = No Heating
1 = 1 Stage
2 = 2 Stage
3 = 3 Stage
4 = 4 Stage
5 = 5 Stage
6 = 6 Stage
9 = Modulating/SCR Electric - Potentiometer Control
A = Modulating/SCR Electric – 0–10VDC Control Signal
H = Single Serpentine 8 fpi
J = Half Serpentine 8 fpi
K = Single Serpentine 10 fpi
L = Half Serpentine 10 fpi
M = Single Serpentine 12 fpi
N = Half Serpentine 12 fpi

4.1.3. Unit Features Options

		1A	1B	1C	1D		2	
SB-007-3-0-L70A-000	:	0	0	0	0	-	0	00-EF1-0A0-000000Y-E0-00A00000B

1A: Return / Outside Air Section

0 = Standard
2 = Mixing Box - Top and Front Openings

1B: Exhaust Fan

0 = Standard
A = 250 mm Exhaust Fan, 800 W EC Motor
B = 310 mm Exhaust Fan, 1.0 kW EC Motor
C = 310 mm Exhaust Fan, 1.7 kW EC Motor
D = 355 mm Exhaust Fan, 1.7 kW EC Motor
E = 450 mm Exhaust Fan, 3.0 kW EC Motor
F = 450 mm Exhaust Fan, 6.0 kW EC Motor
G = Dual 310 mm Exhaust Fan, 1.0 kW EC Motor
H = Dual 310 mm Exhaust Fan, 1.7 kW EC Motor
J = Dual 355 mm Exhaust Fan, 1.7 kW EC Motor
K = Dual 450 mm Exhaust Fan, 3.0 kW EC Motor
L = Dual 450 mm Exhaust Fan, 6.0 kW EC Motor
M = 250 mm Exhaust Fan, 800 W EC Motor + Piezo Ring
N = 310 mm Exhaust Fan, 1.0 kW EC Motor + Piezo Ring
P = 310 mm Exhaust Fan, 1.7 kW EC Motor + Piezo Ring
Q = 355 mm Exhaust Fan, 1.7 kW EC Motor + Piezo Ring
R = 450 mm Exhaust Fan, 3.0 kW EC Motor + Piezo Ring
S = 450 mm Exhaust Fan, 6.0 kW EC Motor + Piezo Ring

1B: Exhaust Fan (Continued)

T = Dual 310 mm Exhaust Fan, 1.0 kW EC Motor + Piezo Ring
U = Dual 310 mm Exhaust Fan, 1.7 kW EC Motor + Piezo Ring
V = Dual 355 mm Exhaust Fan, 1.7 kW EC Motor + Piezo Ring
W = Dual 450 mm Exhaust Fan, 3.0 kW EC Motor + Piezo Ring
Y = Dual 450 mm Exhaust Fan, 6.0 kW EC Motor + Piezo Ring

1C: Filter Location

0 = Standard

1D: Mixing Box Damper Control

0 = Standard - None
A = 2 Position Actuators (24V)
B = Fully Modulating Actuators (DDC)
C = Fixed Position Dampers
D = Fully Modulating Actuator - Enthalpy Limit
E = Fully Modulating Actuator - Sensible Limit

2: Waterside Economizer

0 = Standard - None

4.1.4. Unit Features Options (Continued)

	3	4		5A	5B	5C		6A	6B	6C		
SB-007-3-0-L70A-000:0000-0	0	0	-	E	F	1	-	0	A	0	-	000000Y-E0-00A00000B

3: Energy Recovery Type

0 = Standard
A = Energy Recovery Wheel - Total + High CFM, Polymer
B = Energy Recovery Wheel - High Efficiency - Total + High CFM, Polymer
C = Energy Recovery Wheel - Total + High CFM, 1% Purge, Polymer
D = Energy Recovery Wheel - High Efficiency - Total + High CFM, 1% Purge, Polymer
E = Energy Recovery Wheel - Sensible + High CFM, Polymer
G = Energy Recovery Wheel - Sensible + High CFM, 1% Purge, Polymer
J = Energy Recovery Wheel - Total + High CFM, Aluminum
L = Energy Recovery Wheel - Total + High CFM, 1% Purge, Aluminum

4: Maintenance Options

0 = Standard
A = Blower Aux. Contact - Low Voltage Terminal Block
B = Remote Start/Stop Terminals - Low Voltage Terminal Block
C = Options A + B

5A: Supply Air Blower Configuration

0 = No Airside - Condensing Unit Only
E = 1 Blower + 1 Perm Magnet AC TEAO Motor + 1 VFD
F = 2 Blowers + 2 Perm Magnet AC TEAO Motors + 2 VFDs

5B: Supply Air Blower

0 = No Airside - Condensing Unit Only
F = 13.5" Backward Curved Plenum, 70% Width
G = 15" Backward Curved Plenum, 70% Width
1 = 15" Backward Curved Plenum
4 = 18.5" Backward Curved Plenum, 70% Width

5C: Supply Air Blower Motor

0 = No Airside - Condensing Unit Only
1 = 1 HP
2 = 2 HP
3 = 3 HP
4 = 5 HP

6A: Pre-Filter Type

0 = No Pre Filter
A = 2" Pleated - MERV 8

6B: Unit Filter Type

0 = No Unit Filter
A = 2" Pleated - MERV 8
B = 4" Pleated - MERV 8
C = 4" Pleated - MERV 11
D = 4" Pleated - MERV 13
E = 4" Pleated - MERV 14

6C: Filter Options

0 = Standard
A = Clogged Filter Switch
B = Magnehelic Gauge
C = Options A + B

4.1.5. Unit Features Options (Continued)

		7	8	9	10	11	12	13		
SB-007-3-0-L70A-000:0000-000-EF1-0A0	-	**0**	**0**	**0**	**0**	**0**	**0**	**Y**	-	E0-00A00000B

7: Refrigeration Control

0 = Standard
C = Freeze Stat - Each Circuit

8: Refrigeration Options

0 = Standard
D = Modulating Hot Gas Reheat

9: Refrigeration Accessories

0 = Standard
A = Sight Glass
B = Compressor Isolation Valves
C = Options A + B

10: Power Options

0 = Standard Power Block

11: Safety Options

0 = Standard
C = Supply Air Smoke Detector
H = Remote Safety Shutoff Terminals
L = Options C + H

12: Controls

0 = Standard
A = Low Limit Controls
B = Phase and Brown Out Protection
C = Options A + B
D = Energy Recovery Wheel Rotation Detection
E = Options A+D
F = Options B+D
G = Options A+B+D

13: Special Controls

D = VAV Unit Controller - VAV Cool + CV Heat
Y = Single Zone VAV Heat Pump Unit Controller - VAV Cool + VAV Heat
Z = Constant Volume Heat Pump Unit Controller - CV Cool + CV Heat
1 = Make Up Air Heat Pump Unit Controller - CV Cool + CV Heat
5 = Field-Installed DDC Controls by Others with Isolation Relays
6 = Factory-Installed DDC Controls Furnished by Others with Isolation Relays

4.1.6. Unit Features Options (Continued)

		14A	14B		15	16	17	18	19	
SB-007-3-0-L70A-000:0000-000-EF1-0A0-000000Y	-	**E**	**0**	**-**	**0**	**0**	**A**	**0**	**0**	000B

14A: Water-Cooled Condenser

B = Water Flow Switch
E = Balancing Valves + Option B
H = Motorized Shut-Off Valve + Option B
J = Two-Way Head Pressure Control + Option B
M = Balancing Valves + Option J
T = CuNi Corrosion Resistant Coaxial Heat Exchanger + Option B
W = CuNi Corrosion Resistant Coaxial Heat Exchanger + Option E
1 = CuNi Corrosion Resistant Coaxial Heat Exchanger + Option H
2 = CuNi Corrosion Resistant Coaxial Heat Exchanger + Option J
4 = CuNi Corrosion Resistant Coaxial Heat Exchanger + Option L
5 = CuNi Corrosion Resistant Coaxial Heat Exchanger + Option M

14B: Waterside Economizer Piping

0 = Standard – None

15: Glycol Percentage

0 = Standard - None
A = Minimum 20% Propylene Glycol
B = Minimum 40% Propylene Glycol

16: Interior Cabinet Options

0 = Standard - Double Wall Construction + R-6.5 Foam Insulation + Stainless-Steel Drain Pan
A = Overflow Switch
B = Compressor Sound Blanket
C = Options A + B

17: Exterior Cabinet Options

A = AAON Gray Exterior Paint
B = Special Paint
D = Options A + Interior Corrosion Protection
E = No Paint

18: Energy Recovery Cabinet

0 = Standard - None
A = Top RA + Back EA + Back OA Connections
G = OA + EA Dampers - Top RA + Back EA + Back OA Connections
N = OA + Economizer Dampers - Top RA + Back EA + Back Connections
U = OA + EA + Economizer Dampers - Top RA + Back EA + Back OA Connections

19: Code Options

0 = Standard - ETL U.S.A. Listing
H = ETL U.S.A. + Canada Listing

4.1.7. Unit Features Options (Continued)

	20	21	22	23
SB-007-3-0-L70A-000:0000-000-EF1-0A0-000000Y-E0-00A00	**0**	**0**	**0**	**B**

20: Crating

0 = Standard
A = Export Crating
B = Forkliftable Base - 5" Base
D = Options A + B
E = Shipping Shrink Wrap
F = Options B + E
G = Options A + B + E

21: Unit Splits

0 = Standard - One Piece Unit
A = 1 Shipping Split (2 pallets)
B = 2 Shipping Splits (3 pallets)
C = 3 Shipping Splits (4 pallets)
D = 4 Shipping Splits (5 pallets)
H = Special Shipping Split

22: Control Vendors

0 = Standard
V = VCC-X Controls + Integrated BACnet IP

23: Type

B = Standard
X = Special Pricing Authorization

5. GENERAL INFORMATION

SB Series self-contained units have been designed for indoor installation only. Units are assembled, wired, charged, and run-tested at the factory. SB Series units are intended for installation up to 3500 meters (11,500 ft)

WARNING

Improper installation, adjustment, alteration, service or maintenance can cause property damage, personal injury, or loss of life. Startup and service must be performed by a Factory Trained Service Technician. A copy of this IOM must be kept with the unit.

CAUTION

These units must not be used as a "construction heater" at any time during any phase of construction. Very low return air temperatures, harmful vapors, and misplacement of the filters will damage the unit and its efficiency.

5.1. Certification of Steam or Hot Water Heat Models

- Certified as a forced air heating system with cooling.
- Certified for indoor installation only.

5.2. Certification of Electric Heat Models

- Certified as an electric warm air furnace with cooling.
- Certified for indoor installation only.

5.3. Certification of Cooling Models

- Certified as a commercial central air conditioner with electrically operated compressors.
- Certified for indoor installation only.
- Certified with refrigerant R-454B coils.

5.4. Codes and Ordinances

SB Series units have been tested and certified, by ETL, in accordance with CSA C22.2 No. 236 and UL-60335-2-40 and Z21.47-2016.

Size system in accordance with the American Society of Heating, Refrigeration, and Air Conditioning Engineers Handbook.

Installation of units must conform to the ICC standards of the International Mechanical Code, the International Building Code, the Installation of Air Conditioning and Ventilating Systems Standard, NFPA 90A, and local building, plumbing, and wastewater codes. All appliances must be electrically grounded in accordance with local codes, or in the absence of local codes, the current National Electric Code, ANSI/NFPA 70, or the current Canadian Electrical Code, CSA C22.1.

CAUTION

The Clean Air Act of 1990 bans the intentional venting of refrigerant as of July 1, 1992. Approved methods of recovery, recycling, or reclaiming must be followed.

WARNING

Coils and sheet metal surfaces present sharp edges, and care must be taken when working with equipment.

WARNING

Failure to observe the following instructions will result in premature failure of your system and possible voiding of the warranty.

5.5. Receiving Unit

When received, check the unit for damage that might have occurred in transit. If damage is found, it must be noted on the carrier's Freight Bill. A request for inspection by the carrier's agent must be made in writing at once.

Check the nameplate to ensure the correct model sizes and voltages have been received to match the job requirements.

If repairs must be made to damaged goods, then the factory must be notified before any repair action is taken to protect the warranty. Certain equipment alterations, repairs, and manipulations of equipment without the manufacturer's consent may void the product warranty. Contact the AAON Warranty Department for assistance with handling damaged goods, repairs, and freight claims: (918) 382-6450.

Note: Upon receipt, check the shipment for items that ship loose, such as filters and remote sensors. Consult order and shipment documentation to identify potential loose-shipped items. Loose-shipped items may have been placed inside the unit cabinet for security. Installers and owners must secure all doors with locks or nuts and bolts to prevent unauthorized access.

Figure 1: Lockable Handle

5.6. Storage

If installation will not occur immediately following delivery, store equipment in a dry, protected area away from construction traffic and in the proper orientation as marked on the packaging, with all internal packaging in place. Secure all loose-shipped items. Unit must be stored in accordance with ASHRAE 15 requirements for machine rooms

5.7. Direct Expansion (DX) Systems

WARNING

Compressor Cycling:

3 Minute Minimum Off Time - To prevent the motor from overheating, compressors must cycle off for a minimum of 3 minutes.

5 Minute Minimum on Time - To maintain the proper oil level, compressors must cycle on for a minimum of 5 minutes.

The cycle rate must not exceed 7 starts per hour.

All water-cooled condenser DX systems are factory assembled, leak tested, charged with R-454B refrigerant, and run tested.

All DX systems include evaporator coils, liquid line filter dryers, thermal expansion valves (TXV), and digital scroll compressors.

CAUTION

Crankcase Heater:

Some units are equipped with compressor crankcase heaters, which must be energized at least 24 hours prior to condenser operation, to clear any liquid refrigerant from the compressors.

Never turn off the main power supply to the unit, except for servicing, emergencies, or a complete shutdown of the unit. When power is cut off from the unit crankcase heaters cannot prevent refrigerant migration into the compressors. This means the compressor may cool down, and liquid refrigerant may accumulate in the compressor. The compressor is designed to pump refrigerant gas, and damage may occur when power is restored.

If power to the unit must be off for more than an hour, turn the thermostat system switch to "OFF", or turn the unit off at the control panel, and leave the unit off until the main power switch has been turned on again for at least 24 hours for units with compressor crankcase heaters. This will give the crankcase heater time to clear any liquid accumulation out of the compressor before it is started.

Always control the unit from the thermostat or control panel, never at the main power supply, except for emergencies or a complete shutdown of the unit.

During the cooling season, if the air flow is reduced due to dirty air filters or any other reason, the cooling coils can get too cold, which will cause excessive liquid to return to the compressor. As the liquid concentration builds up, oil is washed out of the compressor, leaving it starved for lubrication.

The compressor life will be seriously shortened by reduced lubrication and the pumping of excessive amounts of liquid oil and refrigerant.

5.8. Wiring Diagrams

Unit specific wiring diagrams are laminated and affixed inside the controls compartment door.

5.9. Condensate Drain Pans

Units require drain p-traps and lines to be connected to the condensate drain pans of the unit. The lines must be the same pipe size or larger than the drain connection, include a p-trap, and pitch downward toward the drain. An air brake must be used with long runs of condensate lines.

Waterside economizer coil units include a separate condensate drain pan, which drains into the evaporator coil drain pan.

CAUTION

Crankcase Heater:
Some units are equipped with compressor crankcase heaters, which must be energized at least 24 hours prior to condenser operation, to clear any liquid refrigerant from the compressors.

6. INSTALLATION

AAON equipment has been designed for quick and easy installation.

6.1. Locating the Unit

The placement of the unit relative to ductwork, electrical, and plumbing must be carefully considered. The return air plenum or duct can be mounted directly to the return air flanges. Use flexible gasket material to seal the duct to the unit.

Verify floor or foundation can support the total unit weight, including accessory weights. The unit must be level in both horizontal axes to support the unit and reduce noise and vibration from the unit. If the unit is to be installed indoors or in areas without sufficient ventilation, provide venting from all pressure relief outlets to outdoors in accordance with ASHRAE 15 requirements.

Allow adequate service clearances as shown on the unit nameplate and unit drawing. Consult your local building codes for additional service clearance requirements.

Allow adequate space for piping access and panel removal. Condenser water piping and condensate drain connections are located on either side of the unit.

Figure 2: SB Series

Table 1: SB Series Clearances

Location	Minimum Clearance Required
Access Door Sides	91.4 cm (36 inches)[1]
All Other Sides	15.2 cm (6 inches)[2]

1. Additional clearance may be required to allow for coil removal. See Table 2
2. May be installed flush, depending upon local codes.

Table 2: Clearances for Coil Pull

Unit Size	Access Side
SB 3–5 tons	81.3 cm (32 inches)
SB 6–10 tons	111.8 cm (44 inches)
SB 14–18 tons	147.3 cm (58 inches)

CAUTION

An emergency drain pan is recommended for all applications where there is a risk of water damage to the surrounding structure or furnishings. Refer to local codes.

6.1.1. Floor Mounted Units

Make sure the unit is level and mounted on a field supplied platform with a minimum height to allow for proper depth of the condensate line p-trap. Other installation provisions may be necessary according to job specifications. SB Series vertical air handling units are designed for up flow applications only.

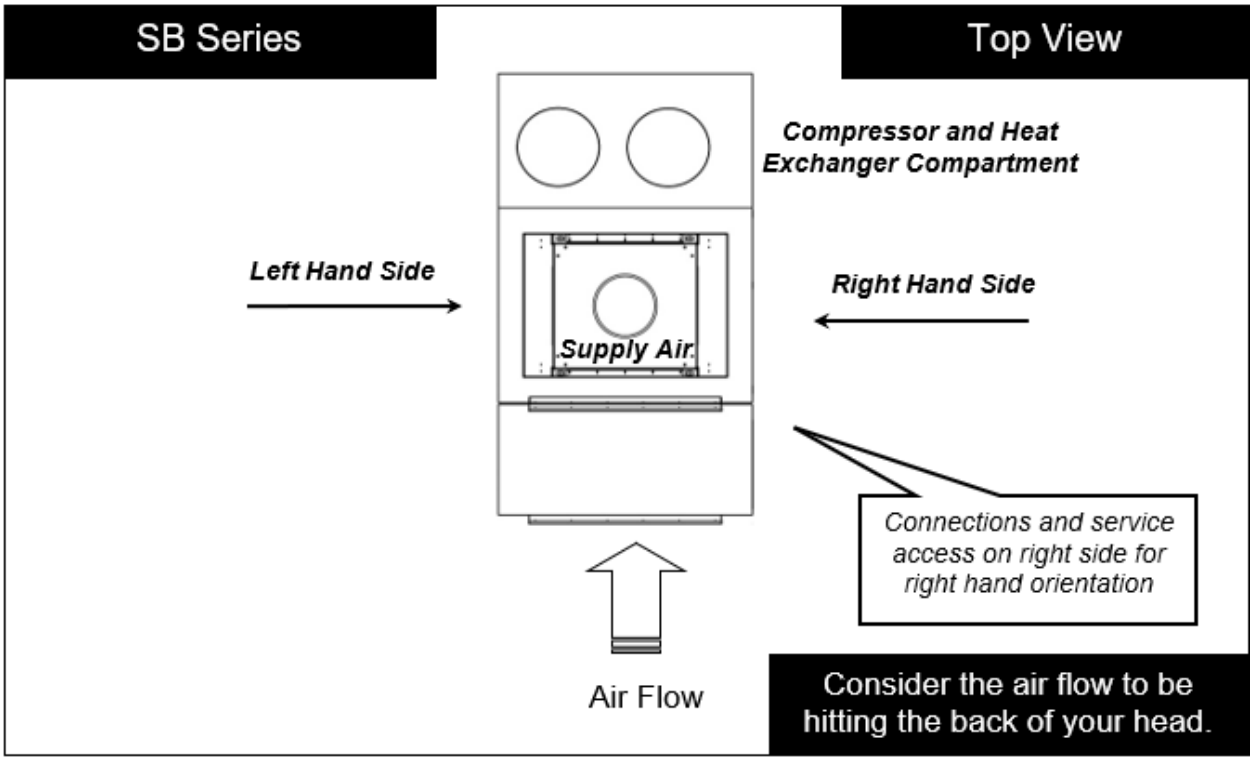

Figure 3: SB Series Unit Orientation

6.2. Lifting and Handling the Unit

Before lifting the unit, be sure that all shipping material has been removed from the unit.

WARNING

Unit Handling:
Incorrect lifting can cause damage to the unit, injury, or death. Lifting equipment capacity must exceed unit weight by an adequate safety factor. Always test the lift unit not more than 61 cm (24 inches) high to verify the proper center of gravity lift point.

Care must be taken if using spreader bars, blocking, or other lifting devices to prevent damage to the cabinet, coil, or fans.

6.3. Unit Assembly

Although SB Series units are shipped factory assembled as standard, the unit may be ordered as shipping splits for certain applications, such as for assembly in existing structures where modules must be manipulated separately. If the unit was ordered as shipping splits, then they must be assembled in the field.

If the Air Handler section and the Compressor section ship split, the refrigerant piping must be field installed to connect these two sections.

Locate the schematic in the equipment's literature packet.

6.3.1. Identify and Situate Splits

SB Units can have the following ship split sections:

1. Exhaust Fan
2. Energy Recovery
3. Air Handler
4. Water-Cooled Condenser
5. Electric Heat
6. Pre-filter
7. Mixing box

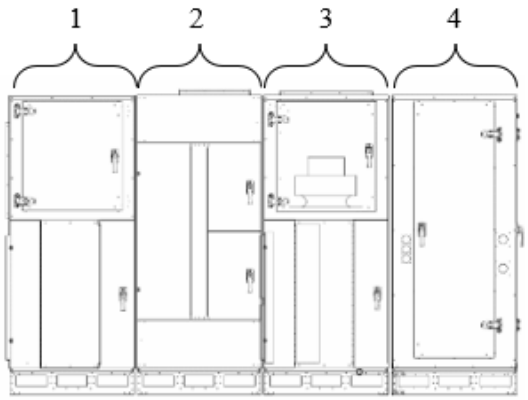

Figure 4: SB Schematic with (1) Exhaust Fan, (2) Energy Recovery, (3) Air Handler, and (4) Compressor Section

6.3.2. Connect Sections

Using the SB Schematic as an example, section 1 will have a duct flange, and it will connect to section 2 on the side that does not have a flange. First, make sure the gasket is on the panel around the edges of the exposed duct flanges. Push sections 1 and 2 together so that the flange from section 1 is inside section 2.

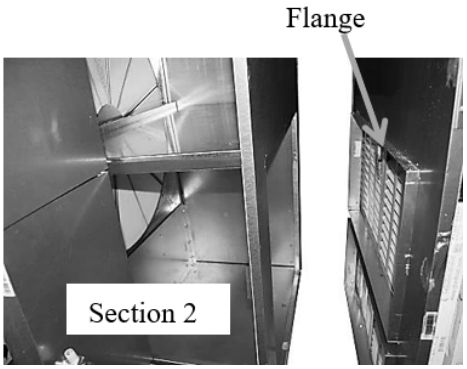

Figure 5: Connect Sections

Use bar clamps or other non-destructive winching devices to pull the tops of the modules together tightly.

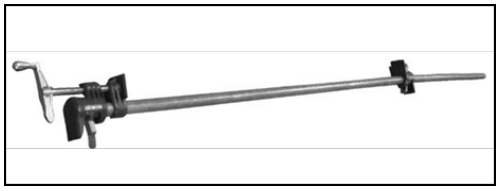

Figure 6: Bar Clamp

At each of the pre-drilled holes in the flange, drill 8 mm (5/16") hex head self-tapping screws to secure the two sections together.

Figure 7: Flange Overlap

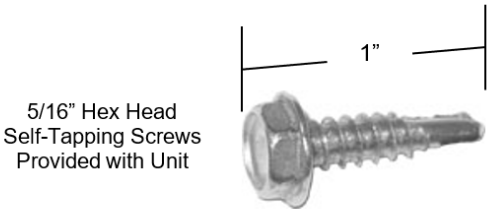

Figure 8: Self-Tapping Screw

All connection hardware is shipped with the unit.

6.3.3. Secure Module Joints

The metal straps are to be used to secure module joints. Straps are provided with pre-drilled holes. Self-tapping sheet metal screws are provided to attach the straps to the unit cabinet.

Leave bar clamps in place until the strap is secure.

Place the strap over a module joint, ensure the strap completely covers the joint, and that it is square with the unit casing.

Insert self-tapping screws through pre-drilled holes in the strap and secure the screws into the unit casing using a power drill. For best results, use the lowest effective power drill torque setting. Be careful not to over-tighten the screws.

Remove bar clamps and repeat for all remaining module joints.

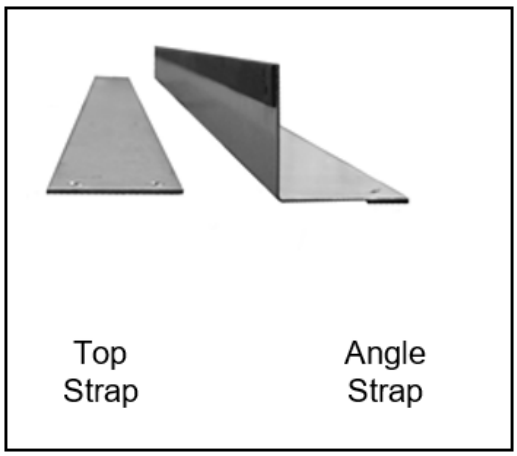

Figure 9: Strap Types

6.3.4. Connect Power and Control Wiring

SB Series units are equipped with low and high voltage quick connects to connect wiring from one section to the next. Wire from the unit to external controls and power sources must be provided in the field.

Figure 10: Low Voltage Quick Connect

A color-coded wiring diagram is laminated and affixed to the inside of the control compartment access door. SB Series units are equipped with a single point power connection.

When the AHU ships split from the compressor section, the A2L sensor in the evaporator coil section will need to be field connected to the mitigation board. The A2L sensor will be mounted on the wall near the evaporator coil and the wiring coiled up to be field wired to the mitigation board in the controls section (labeled A2L-AIR on the wiring diagram).

6.3.5. Final Sealing

It is very important to keep air from infiltrating the unit cabinet. Seal all piping penetrations with Armaflex, Permagum, or other suitable sealant. Also, seal around drain connections, electrical connections, and all other inlets where air may enter the cabinet. This is especially important when the unit is installed in an unconditioned area.

CAUTION

Proper sealing of the electrical and piping entries into the unit must be verified by a qualified technician. Failure to seal the entries may result in damage to the unit and property.

6.3.6. Refrigerant Piping

If the Air Handler section and the Compressor section ship split, the refrigerant piping must be field installed to connect these two sections. The copper to connect each refrigerant line is taped together and shipped inside the unit.

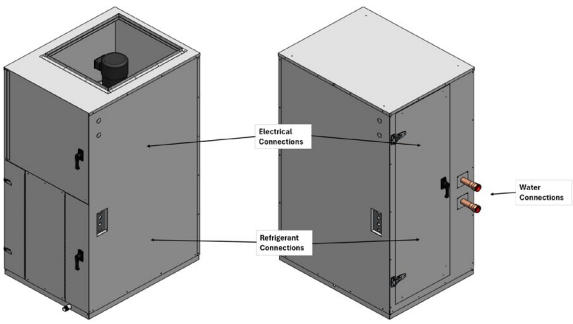

Figure 11: Ship Split Sections

6.4. Refrigerant-to-Water Heat Exchanger Water Piping

Condenser water pump, condenser water piping, cooling tower, pressure gauges, strainers, piping insulation and all components of the waterside piping must be field installed.

6.4.1. Open Loop Applications

This product contains one or more refrigerant-to-water heat exchangers made of cupronickel or copper and is subject to severe corrosion and failure when exposed to chlorides.

CAUTION

Field installed pipework must be protected from physical damage in operation and service. All joints must be accessible for inspection prior to being covered. Install in accordance with applicable local codes. In the absence of local codes, install in accordance with ASHRAE 15, ASHRAE 15.2, IAPMO Uniform Mechanical Code, ICC International Mechanical Code, or CSA B52. Do no install any field made joints within conditioned airstream.

WARNING

Open Loop Applications:
Failure of the refrigerant-to-water heat exchanger as a result of chemical corrosion is excluded from coverage under AAON Inc. warranties and the heat exchanger manufacturer's warranties.

Do not allow water containing any form of chlorides to enter this heat exchanger.

Common forms of chlorides include:

1. Sea water mist entering an open cooling tower system.
2. Contaminated make-up water containing salt water.
3. Water loops are disinfected with solutions containing sodium hypochlorite.

Chlorides will result in a premature failure of the refrigerant-to-water heat exchanger.

Failure of the refrigerant-to-water heat exchanger as a result of chemical corrosion is excluded from coverage under AAON warranties and the heat exchanger manufacturer warranties.

Failure of the refrigerant-to-water heat exchanger will allow water to enter the refrigerant circuit and will cause extensive damage to the refrigerant circuit components. Any damage to the equipment as a result of refrigerant-to-water heat exchanger failure from chemical corrosion due the fluid in the refrigerant-to-water heat exchanger is excluded from coverage under AAON warranties and the heat exchanger manufacturer warranties.

WARNING

Open Loop Applications:
Cupronickel refrigerant-to-water heat exchangers must be used with all open loop applications. Failure to use a Cupronickel heat exchanger may result in premature failure of your system and possible voiding of the warranty.

CAUTION

Cleaning the cooling tower or condenser water loop with harsh chemicals such as hydrochloric acid (muriatic acid), chlorine, or other chlorides can damage the refrigerant-to-water heat exchanger. Care must be taken to avoid allowing chemicals to enter the refrigerant-to-water heat exchanger. See Appendix B: Heat Exchanger Corrosion Resistance for more information.

6.4.2. Freezing Water in the Heat Exchanger

This product contains one or more refrigerant-to-water heat exchangers. A refrigerant-to-water heat exchanger contains refrigerant in one passage and water in another passage. Water is subject to freezing at 0°C (32°F). When water freezes in a heat exchanger, a significant amount of force is exerted on the components of the heat exchanger where the water is confined.

Failure of the condenser due to freezing will allow water to enter the refrigerant circuit and will cause extensive damage to the refrigerant circuit components. Any damage to the equipment as a result of water freezing in the condenser is excluded from coverage under AAON warranties and the heat exchanger manufacturer's warranties.

WARNING

Water Freezing:
Failure of the condenser due to freezing will allow water to enter the refrigerant circuit and will cause extensive damage to the refrigerant circuit components. Any damage to the equipment as a result of water freezing in the condenser is excluded from coverage under AAON warranties and the heat exchanger manufacturer's warranties.

Unit is capable of operating with Entering Water Temperatures (EWT) as low as 13.9°C (57°F) during cooling mode without the need for head pressure control. If the EWT is expected to be lower than 13.9°C (57°F) or more stable operation is desired, a factory provided head pressure control water valve option is available.

Glycol solutions are required if ambient temperatures are expected to fall below freezing or if the loop water temperature is below 10°C (50°F) while operating in the heating mode with the design minimum flow rate (heat pump units only). Adding glycol to condenser water causes an increase in pressure drop resulting in a decrease in unit performance. A minimum concentration of 20% glycol solution is required.

Table 3: Glycol Concentration Freezing Points (Metric)

% Glycol	Ethylene Glycol	Propylene Glycol
20	-7.8°C	-7.2°C
30	-13.9°C	-12.8°C
40	-21.7°C	-21.1°C
50	-33.3°C	-32.8°C

Table 4: Glycol Concentration Freezing Points (Imperial)

% Glycol	Ethylene Glycol	Propylene Glycol
20	18°F	19°F
30	7°F	9°F
40	-7°F	-6°F
50	-28°F	-27°F

Water loop piping runs through unheated areas or outside the building must be insulated.

Never operate the unit in heat pump mode with a saturated suction temperature below 1.7°C (35°F) for pure water systems or below the freezing point + (-16.1°C [3°F]) of the aqueous solution of water and glycol.

6.4.3. Water Piping

A water flow switch is factory installed between the condenser water supply and return connections. This sensor provides a signal to the unit controller that water flow is present in the heat exchanger, and the unit can operate without damaging unit components.

WARNING

Water Pressure:
Prior to connection of condensing water supply, verify water pressure is less than the maximum pressure of 2068.4 kPa (300 psi). To prevent injury or death due to the instantaneous release of high-pressure water, relief valves must be field supplied on water piping. Supply water connection may require a backflow preventer to prevent supply makeup water from backing up into the public water system.

CAUTION

PVC (Polyvinyl Chloride) and CPVC (Chlorinated Polyvinyl Chloride) are vulnerable to attack by certain chemicals. Polyolester (POE) oils used with R-454B and other refrigerants, even in trace amounts, in a PVC or CPVC piping system, will result in stress cracking of the piping and fittings and complete piping system failure.

Only use approved water pipe material. Avoid using galvanized material for water lines/fittings as the material is corrosive and may cause fouling of the water system.

Table 5: Condenser Water Connections

Model (SB-)	Supply and Return Connection Size (FPT)
003, 004, 005	25 mm (1")
006, 007	32 mm (1 1/4")
009, 010	38 mm (1 1/2")
014, 016, 018	51 mm (2")

Condenser water pump must be field sized and installed between the cooling tower or geothermal wellfield and self-contained unit. Size system in accordance with the ASHRAE Handbook. Use engineering guidelines to maintain equal distances for supply and return piping and limit bend radius to maintain balance in the system. Balancing valves, permanent thermometers and gauges may be required.

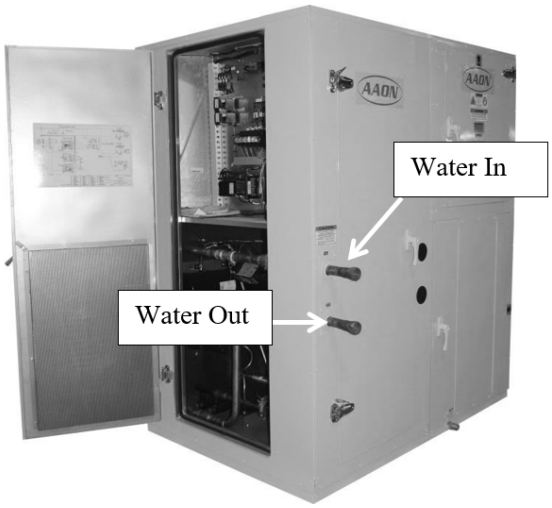

Figure 12: Water Connections for Water-Source Heat Pumps

Table 6: Water Connection Locations

Unit Configuration	Locations
Water-Source Heat Pump	Water In - Top
	Water Out - Bottom
Water-Cooled Condenser	Water In - Bottom
	Water Out - Top

CAUTION

Water system components must be properly sized and correctly installed by a qualified technician. Improper fluid flow due to valves, piping, or improper pump operation may result in unacceptable unit operation and void warranty.

CAUTION

Water Piping:
Follow national and local codes when installing water piping. Connections to the unit must incorporate vibration eliminators to reduce noise and vibration and shut-off valves to facilitate servicing. Supply and return-water piping must be at least as large as the unit connections and larger depending on the length of runs, rise, and bends.

Before connecting to the unit, flush the condenser water system to remove foreign material that could cause condenser fouling. Install a screen strainer with a minimum of 20 Mesh ahead of the condenser inlet to prevent condenser fouling and internal tube damage. Mineral content of the condenser water must be controlled. All make-up water has minerals in it, and as the water is evaporated in the cooling tower, these minerals remain. As the mineral content of the water increases, the conductivity of the water increases.

Field provided and installed water treatment program must be compatible with stainless-steel, copper, aluminum, ABS plastic, and PVC. Batch feed processes must never be used as concentrated chemicals can cause corrosion. Never use hydrochloric acid (muriatic acid) or chlorine as it will corrode stainless-steel.

Water loop piping runs through unheated areas or outside the building must be insulated.

Note: For unit isolation and water flow balancing, characterized ball valves must be factory or field installed in the condenser water supply and return. All manual flow valves in the condenser water system must be of the characterized ball valve design. Globe or gate valves must not be used due to high pressure drops and poor throttling characteristics.

Pressure and temperature ports are recommended in condenser water supply and return lines for system balancing. These openings must be 5 to 10 pipe diameters from the unit water connections. To allow for mixing and temperature stabilization, wells in the water piping must extend at least 1/2 pipe diameter into the pipe.

Piping systems must not exceed 10 ft/sec fluid velocity to ensure tube wall integrity and reduce noise.

6.5. Electrical

For units not equipped with incoming power disconnect, means for all pole disconnection must be provided in the fixed wiring in accordance with local or national electrical codes The single point electrical power connections are made in the electrical control compartment.

Verify the unit nameplate agrees with the power supply. Connect power and control field wiring as shown on the unit wiring diagram provided with the unit.

Table 7: Nameplate Voltage Markings and Tolerances

Hz	Nameplate Voltage	Nominal System Voltage	Operating Voltage Range 1		Acceptable Performance Range2	
			Min	Max	Min	Max
60	115	120	104	127	108	126
	208/230	208/240	187	254	187	252
	208	208	187	228	187	228
	230	240	208	254	216	252
	265	277	240	293	249	291
	460	480	416	508	432	504
	575	600	520	635	540	630
50	230	230	198	254	208	254
	400	400	344	440	360	440

Notes:

1. Operating voltage is the minimum and maximum voltage for which the unit can function. Never operate outside of this min and max voltage.
2. The Acceptable Performance Range is the minimum and maximum voltage for which the unit performance is designed and rated to give acceptable performance.

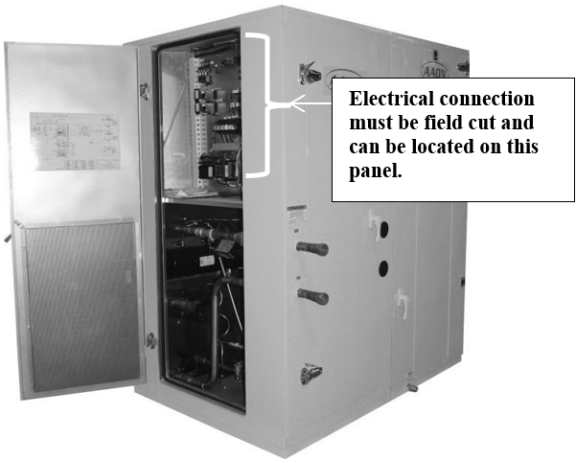

Figure 13: Electrical Connection

WARNING

Disconnect all electrical power sources before servicing the unit. More than one power source may be provided. Failure to do so may result in injury or death from electrical shock or entanglement in moving parts.

All units require field supplied electrical overcurrent and short circuit protection. The device must not be sized larger than the Maximum Overcurrent Protection (MOP) shown on the unit nameplate.

Codes may require a disconnect switch to be within sight of the unit. It is recommended that the field installed overcurrent protection or disconnect switch not be installed on the unit.

Electrical supply can enter through the top or side of the controls compartment. The entry must be field cut into panels of the unit.

A single point connection to a terminal block is provided. Split units may require a connection between the units. High voltage conductors must enter the control panel in a separate opening and separate conduit than the 24V low voltage conductors.

WARNING

The foam insulation releases dangerous fumes when it is burnt. Do not cut a foam part with a cutting torch or plasma cutter. Do not weld to a foam filled part.

Note: Locations for field cut electrical entries are marked on the unit. Field cut openings must be a minimum of 15.2 cm (6 inches) away from all components and wiring to prevent damage due to drilling or cutting.

To pass wires through the wall or roof of the unit, cut a hole and pass conduit through it. Use the following procedure to cut a round hole in a foam panel.

6.5.1. Cutting Electrical Openings

1. Locate the placement of the hole. Be sure that the conduit will not interfere with the operation of any component or prevent access to any door or removable panel.
2. Drill a pilot hole all the way through the foam panel.
3. Using a hole saw, cut the hole through the metal on both sides of the foam part.
4. With a knife, cut the foam out of the hole.
5. After the conduit is installed in the hole, caulk the entire perimeter of the hole on both sides with an industrial-grade silicone sealant or a duct seal compound.

CAUTION

A qualified technician must ensure proper sealing of the electrical entries into the unit. Failure to seal the entries may result in damage to the unit and property.

If a larger cut-out is needed for additional duct connections not provided by the factory, or for any other reason, it is very important that the foam be completely sealed. Insulation covers must be fabricated from sheet metal to cover the foam at the cut. The edges and corners that are not covered must then be sealed using silicone caulking or a duct seal compound.

If a reciprocating saw is used to make the cut-out, take care that the metal skins of the foam part do not separate from the foam, as this would result in reduced structural integrity of the part.

Size supply conductors are based on the unit Minimum Current Ampacity (MCA) rating. Supply conductors must be rated a minimum of 75°C (167°F).

Protect the branch circuit in accordance with code requirements. The unit must be electrically grounded in accordance with local codes, or in the absence of local codes, the current National Electric Code, ANSI/NFPA 70, or the current Canadian Electrical Code, CSA C22.1.

Note: Units are factory wired for 208V, 230V, 460V, or 575V. In some units, the 208V and 230V options may also be provided in single or three-phase configurations. The transformer configuration must be checked by a qualified technician prior to startup.

Wire power leads to the unit's terminal block or main disconnect. All wiring beyond this point has been completed by AAON and cannot be modified without effecting the unit's agency/safety certification.

Supply voltage must be within the min/max range shown on the unit nameplate. Available short circuit current must not exceed the short circuit current rating (SCCR) shown on the unit nameplate.

Three phase voltage imbalances will cause motor overheating and premature failure. The maximum allowable imbalance is 2%.

Voltage imbalance is defined as 100 times the maximum deviation from the average voltage divided by the average voltage.

Example:

(221V+230V+227V)/3 = 226V, then 100*(226V–221V)/226V = 2.2%, which exceeds the allowable imbalance.

Check voltage imbalance at the unit disconnect switch and at the compressor terminal. Contact your local power company for line voltage corrections.

CAUTION

Ensure that wires are protected from damage and wear caused by normal operation of the unit and environmental factors.

A qualified technician must check for proper motor rotation and check blower motor amperage listed on the motor nameplate is not exceeded.

CAUTION

Rotation must be checked on all Motors and Compressors of three-phase units. Supply fan motors must all be checked by a qualified service technician at startup, and any wiring alteration must only be made at the unit's power connection.

Wire control signals to the unit's low voltage terminal block located in the controls compartment.

CAUTION

Scroll compressors are directional and will be damaged by operation in the wrong direction. Low pressure switches on compressors have been disconnected after factory testing. Rotation must be checked by a qualified service technician at startup using suction and discharge pressure gauges, and any wiring alteration must only be made at the unit's power connection.

6.5.2. Thermostat Control Wiring

If a thermostat is used for unit control, locate the thermostat on an inside wall 1.2–1.5 meters (4–5 feet) above the floor where it will not be subjected to drafts, sun exposure, or heat from electrical fixtures of appliances. Control wiring must deliver adequate voltage to components to ensure proper operation. Control voltage returning from controller circuit must be a minimum of 21 VAC. To ensure proper wiring use the following chart to determine the allowable wiring distances.

Table 8: Control Wiring

Wire Size (Stranded) - Copper Conductors Only	Total Wire Distance Allowable	
20 AWG	60.96 m	200 ft
18 AWG	106.7 m	350 ft
16 AWG	152.4 m	500 ft
14 AWG	228.6 m	750 ft
12 AWG	381.0 m	1250 ft

Total Wire Distance Allowable = (Quantity of Control Wires) x (Control Wire Distance)

Take the total wire distance allowable and divide by the number of wires to be connected. This indicates the distance allowable for that size wire. The wiring to the unit must not exceed the total wire distance allowable. If the voltage at the connectors is less than 21 VAC, isolation relays must be installed. If under external control, 21 VAC must be field verified.

All external devices must be powered via a separate external power supply.

Example:

A total of 8 wires must be pulled 75ft to a control the unit. What size wire must be used?

According to the Table 8, 16 AWG allows for 63ft (500 ft/8 wires) and 14 AWG allows for 94ft (750 ft/8 wires). Thus, 14 AWG must be used.

6.5.3. Fuses and Circuit Breakers

The interrupting rating of fuses and circuit breakers is to be determined based on the KAIC rating of the unit. Refer to the wiring diagram for fuse sizing.

Table 9: 35 KAIC Fuse Sizing

35 KAIC Construction		
Component	Description	Interrupting Rating (kA)
Fuse	Class CC, 600V, 0.5A–30A	200
Fuse	Class J, 600V, 35A–600A	200
Disconnect	3P, 600V, 15A–600A	35

Table 10: 65 KAIC Fuse Sizing

65 KAIC Construction		
Component	Description	Interrupting Rating (kA)
Fuse	Class CC, 600V, 0.5A–30A	200
Fuse	Class J, 600V, 35A–600A	200
Disconnect	3P, 600V, 15A–600A	65

6.6. Duct Connection

Remove shipping covers and attach the duct to the flanges provided on the unit. The installer is responsible for sealing ducts to the flanges to prevent water leaks.

Intake air enters the back of the SB Series unit, where the air filters are located. Size ductwork in accordance with the ASHRAE Handbook. Ductwork must be installed in accordance with NFPA Standard 90A.

When attaching duct to the unit, use a flexible/compressible material rated for duct connections. A three-inch flexible connector for both return and supply duct connections is recommended.

6.7. Condensate Drain Piping

The unit is equipped with one condensate drain pan connection. A p-trap and drain line must be installed on at least one section's drain connection, with the p-trap not to exceed 15.2 cm (6") from the drain connection. The lines must be the same pipe size or larger than the drain connection, include a p-trap, and pitch downward toward drain. An air brake must be used with long runs of condensate lines.

CAUTION

The unit must not be operated without p-traps. Failure to install a p-trap may result in overflow of condensate water.

Draw-through cooling coils will have a negative static pressure in the drain pan area. This will cause an un-trapped drain to back up due to air being pulled up through the condensate drain piping.

Condensate drain trapping and piping must conform to all applicable governing codes.

Note: The drain pan connection(s) is a 2.5 cm (1") MPT fitting.

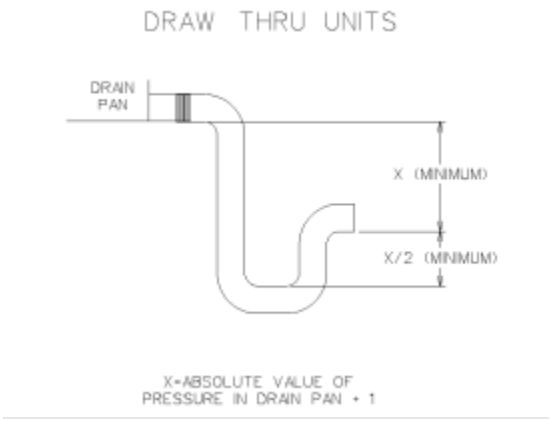

Figure 14: Drain Trap

The X dimension on the draw-through trap must be at least equal to the absolute value of the negative static pressure in the drain pan plus one inch. To calculate the static pressure at the drain pan add the pressure drops of all components upstream of the drain pan, including the cooling coil, and add the return duct static pressure. Include the dirt allowance pressure drop for the filters to account for the worst-case scenario.

The height from top of the bottom bend of the trap to the bottom of the leaving pipe must be at least equal to one half of the X dimension. This ensures that enough water is stored in the trap to prevent losing the drain seal during unit startup

Note: The absolute value of the fan inlet pressure will always be greater than or equal to the absolute value of the static pressure in the drain pan on draw-through units, so the fan inlet pressure is a safe value to use for the drain pan static pressure.

Table 11: Drain Trap Dimensions (Metric)

Draw-Through		
Drain Pan Pressure	Trap Dimensions	
Negative Static	X	X/2
(mm of mercury)	(mm)	(mm)
-0.93	12.70	6.4
-1.87	25.40	12.7
-2.80	38.10	19.1
-3.74	50.80	25.4
-4.67	63.50	31.8
-5.60	76.20	38.1

Table 12: Drain Trap Dimensions (Imperial)

Draw-Through		
Drain Pan Pressure	Trap Dimensions	
Negative Static	X	X/2
(inches of water)	(inch)	(inch)
-0.50	1.50	0.75
-1.00	2.00	1.00
-1.50	2.50	1.25
-2.00	3.00	1.50
-2.50	3.50	1.75
-3.00	4.00	2.00

6.8. Waterside Economizer

Cooling and pre-cooling waterside economizer coil is factory installed upstream of the evaporator coil. Factory tested and field installed water-piping kit includes a fully modulating waterside economizer valve and a fully modulating waterside economizer bypass valve.

The waterside economizer circuit can operate in three modes: waterside economizer only, waterside economizer with mechanical cooling, and mechanical cooling only.

During waterside economizer only mode of operation, the condenser water flows through the waterside economizer coil with modulating valves maintaining the supply air temperature setpoint. The condenser water completely bypasses the water-cooled condenser.

During waterside economizer with mechanical cooling mode of operation, condenser water flows through the waterside economizer coil with the waterside economizer modulating valve fully open. The condenser water then passes through the water-cooled condenser.

During the mechanical cooling only mode of operation, the condenser water flows around the waterside economizer coil with the waterside economizer bypass valve fully open. The condenser water then passes through water-cooled condenser.

Waterside economizer coil condensate drain outlet drains into the evaporator coil drain pan. See the previous section on evaporator coil condensate drain piping.

Mineral content of the condenser water must be controlled. All make-up water has minerals in it, and as the water is evaporated in the cooling tower, these minerals remain. As the mineral content of the water increases, the conductivity of the water increases.

Field provided and installed water treatment program must be compatible with stainless-steel, copper, aluminum, ABS plastic, and PVC. Batch feed processes must never be used, as concentrated chemicals can cause corrosion. Never use hydrochloric acid (muriatic acid) or chlorine, as it will corrode stainless-steel.

6.9. Heating Coils

Factory installed one, two, or four row hot water and steam heating coils can be factory mounted. These coils are supplied from a source through separate piping from the condenser water source. All controls for heating operation are field supplied and field installed.

Always connect the supply to the top of the coil and the return to the bottom. Water coils must not be subjected to entering air temperatures below 3.3°C (38°F) to prevent coil freeze-up. If the air temperature across the coil is going to be below this value, use a glycol solution to match the coldest air expected.

	Hot Water
Min. Entering Air	4.4 °C (40°F)
Max Entering Air	26.7°C (80°F)
Min. Entering Water	60°C (140°F)
Max Entering Water	93.3°C (200°F)
Min. Water Pressure	0 kPa (15 psig)
Max Water Pressure	2068 kPa (300 psig)

WARNING

Piping shall be in accordance with national and local codes. Pressure limiting devices, backflow preventers, and all other safety requirements must be verified by a qualified technician.

CAUTION

Proper sealing of the water piping entries into the unit must be verified by a qualified technician. Failure to seal the entries may result in damage to the unit and property.

6.10. Energy Recovery Units

Some SB units have been equipped with an energy recovery wheel. This section is provided to ensure the energy recovery feature will be properly set up to perform in accordance with the job specifications for your particular application.

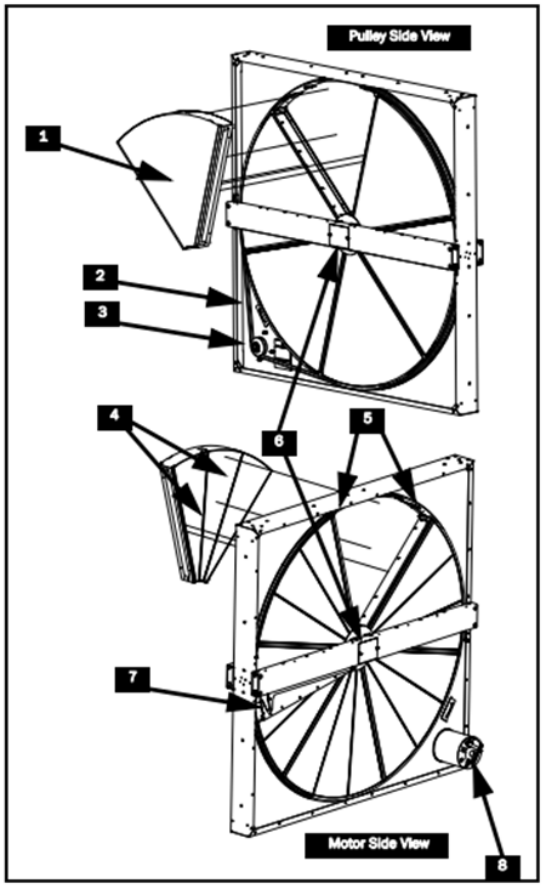

Figure 15: Energy Recovery Wheel

1. Removable Segment (NA for monolith)
2. Permanent Tension Belt
3. Pulley
4. Embedded Segment Stiffeners (NA for monolith)
5. Segment Retaining Latches (NA for monolith)
6. Bearing Beam and Bearing Access Cover Plate (Diameter Seals are behind Bearing Beam on both sides)
7. Adjustable Purge
8. Motor

The Energy Recovery Cassette consists of a frame wheel, wheel drive system, and energy transfer segments. Segments are removable for cleaning or replacement. The segments rotate through counter flowing exhaust and outdoor air supply streams where they transfer heat and/or water vapor from the warm, moist air stream to the cooler and/or drier air stream.

The initial setup and servicing of the energy recovery wheel is very important to maintain proper operation efficiency and building occupant comfort.

Normal maintenance requires periodic inspection of filters, the cassette wheel, drive belts, air seals, wheel drive motor, and its electrical connections.

Wiring diagrams are provided with each motor. When wired according to the wiring diagram, the motor rotates clockwise when viewed from the shaft/pulley side.

By carefully reviewing the information within this section and following the instructions, the risk of improper operation and/or component damage will be minimized.

It is important that periodic maintenance be performed to help ensure trouble-free operation.

6.10.1. Initial Mechanical Check and Setup

Outdoor air intake adjustments must be made according to building ventilation or local code requirements.

After the unit installation is complete, open the cassette access door and determine that the energy wheel rotates freely when turned by hand with no interference noise. Apply power and observe that the wheel rotates at approximately 45-50 RPM. If the wheel does not rotate when power is applied, it may be necessary to readjust the “diameter air seals”.

6.10.2. Air Seal Adjustments

Pile type air seals across both sides of the energy wheel diameter are factory adjusted to provide close clearance between the air seal and wheel.

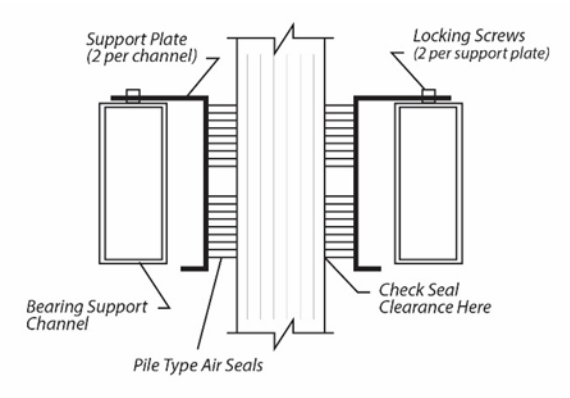

Figure 16: Cross Section of Air Seal Structure

Racking of the unit or cassette during installation, and/or mounting of the unit on a non-level support or in other than the factory orientation can change seal clearances. Tight seals will prevent rotation.

6.10.3. Wheel to Air Seal Clearance

To check wheel-to-seal clearance, first disconnect power to the unit. In some units, the energy recovery wheel assembly can be pulled out from the cabinet to view the air seals. On larger units, the energy recovery wheel may be accessible inside the walk-in cabinet.

A business card or two pieces of paper can be used as a feeler gauge (typically each 0.1 mm (.004") thick) by placing it between the face of the wheel and the pile seal.

Using the paper, determine if a loose slip fit exists between the pile seal and wheel when the wheel is rotated by hand.

To adjust air seal clearance, loosen all seal plate retaining screws holding the separate seal retaining plates to the bearing support channels and slide the seal plates away from the wheel. Using the paper feeler gauge, readjust and retighten one seal plate at a time to provide slip fit clearance when the wheel is rotated by hand.

Confirm that the wheel rotates freely. Apply power to the unit and confirm rotation. Visually inspect the belt and ensure the belt is tracking near the center of the rim. Verify the wheel speed is approximately 45-50 RPM. Confirm there is no excessive noise such as scraping, brushing, or banging.

6.10.4. Set Purge Angle (if included)

When installed, the purge angle is factory set to 5 degrees. If a different angle is required, complete the following steps to adjust the purge:

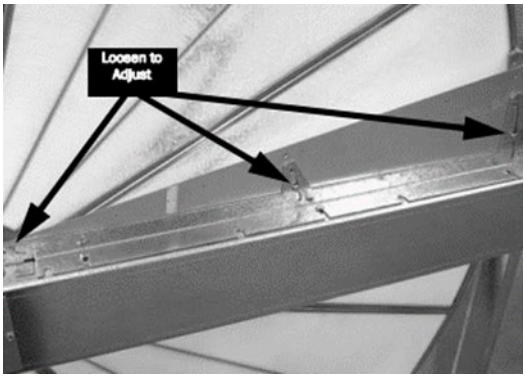

Figure 17: Wheel Adjusting Screws

1. Loosen the three purge adjusting screws.
2. Adjust purge sector to the specified angle.

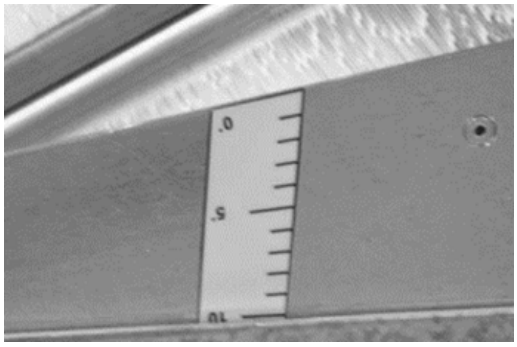

Figure 18: Purge Angle Gauge

3. Tighten the purge adjusting screws.
4. Turn the wheel by hand clockwise (when viewed from the pulley side) to check for interference.

6.10.5. Check Purge Seal

If a purge is installed, check for a slight interference fit between the seal and the face of the wheel by sliding a piece of paper ("feeler gauge") between the seal and the wheel at multiple locations along the purge seal as you rotate the wheel slowly by hand (clockwise when viewed from the pulley side). Verify that the wheel slightly grabs the paper during rotation.

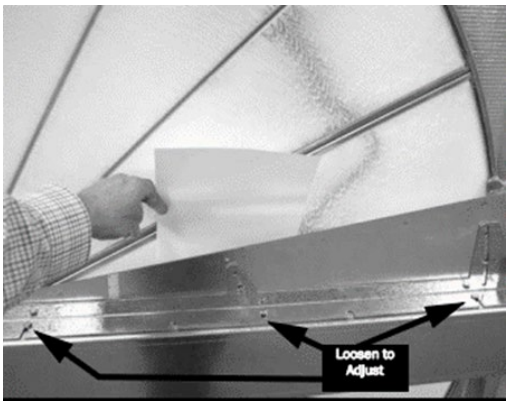

Figure 19: Wheel Adjusting Screws Can Be Used to Adjust the Purge Seal

If it is necessary to adjust a purge seal to the face of the wheel, loosen the two or three screws along the bearing beam and adjust to the proper distance from the wheel surface. Tighten the screws and retest the seal.

6.10.6. Airflow Balancing and Checking

High performance systems commonly have complex air distribution and fan systems. Unqualified personnel must not attempt to adjust the fan operation or air circulation, as all systems have unique operational characteristics. Professional air balance specialists must be employed to establish actual operating conditions and to configure the air delivery system for optimal performance.

6.10.7. Controls

A variety of controls and electrical accessories may be provided with the equipment. Identify the controls on each unit by consulting the appropriate submittal or order documents, and operate according to the control manufacturer's instructions. If you cannot locate installation, operation, or maintenance information for the specific controls, then contact your sales representative or the control manufacturer for assistance.

WARNING

Do not alter factory wiring. Deviation from the supplied wiring diagram will void all warranties and may result in equipment damage or personal injury. Contact the factory with wiring discrepancies.

6.10.8. Routine Maintenance and Handling

Handle cassettes with care. All cassettes must be lifted by the bearing support beam. Holes are provided on both sides of the bearing support beams to facilitate rigging as shown in the following illustration.

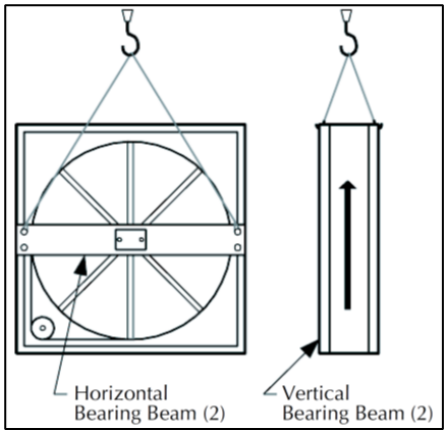

Figure 20: Lifting Hole Locations

Routine maintenance of the Energy Recovery Cassettes includes periodic cleaning of the Energy Recovery Wheel as well as inspection of the Air Seals and Wheel Drive Components as follows:

6.10.9. Cleaning

Cleaning the energy transfer wheel will help maintain optimal performance. The frequency of cleaning is largely dependent on the application and air quality. Use ASHRAE's Classes of Air categories, to create a routine cleaning schedule.

Class 1 air has a low contaminant concentration with an inoffensive odor and sensory irritation intensity.

Class 2 air has moderate contaminant concentration, with mildly offensive odors or sensory-irritation intensity.

Class 3 air has a significant contaminant concentration and significant offensive odor or sensory-irritation intensity.

Class 4 air has highly objectionable fumes or gases and potentially contains dangerous particles, bio-aerosols, or gases at a concentration high enough to be considered harmful, not suitable for recirculation or transfer to any other space.

Table 13: Energy Recovery Wheel Cleaning Frequency

Class of Air	Examples	Cleaning Frequency
Class 1 - Clean Air	• Offices • Classrooms • Assembly rooms • Churches	Every 8–10 years
Class 2 - Moderately Clean Air	• Restrooms • Swimming pools • Dining rooms • Locker rooms • Warehouse • Dorms	Every 4–6 years
Class 3 - Dirty Air	• Kitchens • Dry cleaners • Beauty salons • Laboratories • Pet shops	Every 1–2 years
Class 4 - Contaminated Air	• Paint spray booths • Laboratory fume exhaust • Kitchen grease exhaust	Do not use in this application

The energy recovery wheel is "self-cleaning" with respect to dry particles due to its laminar flow characteristics. Smaller particles pass through; larger particles land on the surface and are blown clear as the flow direction is reversed. Any material that builds up on the face of the wheel can be removed with a brush or vacuum. The primary need for cleaning is to remove oil-based aerosols that have condensed on energy transfer surfaces.

A characteristic of all dry desiccants, such films can close off micron-sized pores at the surface of the desiccant material, reducing the efficiency by which the desiccant can adsorb and desorb moisture, and also build up so as to reduce airflow.

In a reasonably clean indoor environment, such as a school or office building, measurable reductions of airflow or loss of sensible (temperature) effectiveness may not occur for several years. Measurable changes in latent energy (water vapor) transfer can occur in shorter periods of time in applications such as moderate occupant smoking or cooking facilities. In applications experiencing unusually high levels of occupant smoking or oil-based aerosols, such as industrial applications involving the ventilation of machine shop areas, for example, annual washing of energy transfer may be necessary to maintain latent transfer efficiency. Proper cleaning of the energy recovery wheel will restore latent effectiveness to near original performance.

To clean, gain access to the energy recovery wheel, and remove segments. Brush foreign material from the face of the wheel. Wash the segments or small wheels in a 5% solution of non-acid based coil cleaner or alkaline detergent and warm water.

CAUTION

Do not use acid-based cleaners, aromatic solvents, steam, or temperatures in excess of 76.7°C (170°F); damage to the wheel may occur!

Warning: Monolithic wheels with internal bearings must not be soaked to avoid corroding bearing.

Note: Some staining of the desiccant may remain and is not harmful to performance.

Before removing, rapidly run finger across surface of segment to separate polymer strips for better cleaning action. Rinse dirty solution from segment and remove excess water before reinstalling in wheel.

6.11. Air Seals

Four adjustable diameter seals are provided on each cassette to minimize transfer of air between the counter flowing airstreams.

To adjust diameter seals, loosen diameter seal adjusting screws and back seals away from the wheel surface. Rotate the wheel clockwise until two opposing spokes are hidden behind the bearing support beam. Using a folded piece of paper as a feeler gauge, position the paper between the wheel surface and the diameter seals.

Adjust seals towards wheel surface until a slight friction on the feeler gauge (paper) is detected when gauge is moved along the length of the spoke. Retighten adjusting screws and recheck clearance with "feeler" gauge.

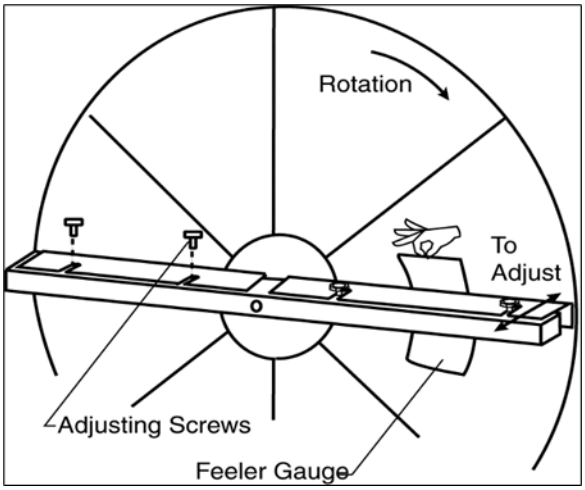

Figure 21: Diameter Seal Adjustment

6.12. Wheel Drive Components

The wheel drive motor bearings are pre-lubricated, and no further lubrication is necessary.

The wheel drive pulley is secured to the drive motor shaft by a combination of either a key or a D slot and a set screw.

The set screw is secured with removable Locktite to prevent loosening. Annually confirm the set screw is secure. The wheel drive belt is a urethane stretch belt designed to provide constant tension through the life of the belt. No adjustment is required. Inspect the drive belt annually for proper tracking and tension. A properly tensioned belt will turn the wheel immediately after power is applied with no visible slippage during start-up.

6.12.1. Installation Considerations

Energy recovery cassettes are incorporated within the design of packaged units, packaged air handlers, and energy recovery ventilators. In each case, the following considerations must be addressed:

6.12.1.1. Accessibility

The cassette and all its operative parts, i.e., motor, belt, pulley, bearings, seals, and energy transfer segments must be accessible for service and maintenance. This design requires that adequate clearance be provided outside the enclosure.

6.12.1.2. Orientation & Supports

The Energy Recovery Cassette may be mounted in any orientation. However, Care must be taken to make certain that the cassette frame remains flat and the bearing beams are not racked.

To verify, make certain that the distance between wheel rim and bearing beam is the same at each end of the bearing beam, to within .64cm (1/4 of an inch) (dimensions A & B). This amount of racking can be compensated for by adjusting the diameter seals.

If greater than .64cm (1/4 of an inch) (dimension C), racking must be corrected to ensure that the drive belt will not disengage from the wheel.

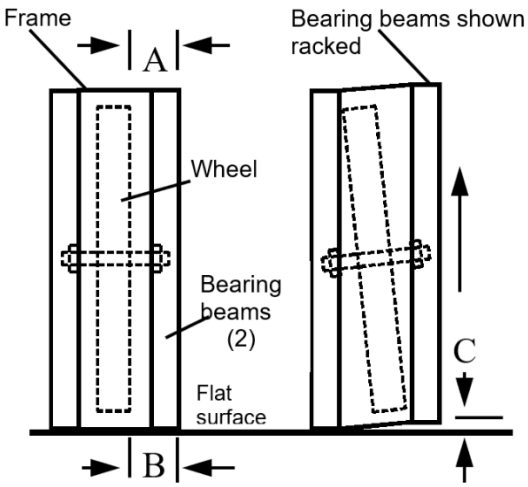

Figure 22: Avoid Racking of Cassette Frame

6.12.1.3. Operation

CAUTION

Keep your hands away from the rotating wheel! Contact with the rotating wheel can cause physical injury.

6.12.1.4. Startup Procedure

1. By hand, turn wheel clockwise (as viewed from the pulley side), to verify wheel turns freely through 360° rotation.
2. Before applying power to drive motor, confirm wheel segments are fully engaged in wheel frame and segment retainers are completely fastened. (See Segment Installation Diagram).
3. With hands and objects away from moving parts, activate unit and confirm wheel rotation. Wheel rotates clockwise (as viewed from the pulley side).
4. If wheel has difficulty starting, turn power off and inspect for excessive interference between the wheel surface and each of the four (4) diameter seals. To correct, loosen diameter seal adjusting screws and back adjustable diameter seals away from surface of wheel, apply power to confirm wheel is free to rotate, then re-adjust and tighten hub and diameter seals, as shown in hub seal adjustment diagram.
5. Start and stop wheel several times to confirm seal adjustment and to confirm belt is tracking properly on wheel rim (approximately .64cm [1/4 of an inch] from outer edge of rim).

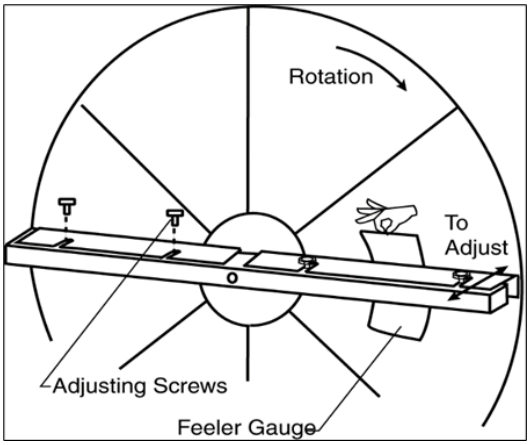

Figure 23: Diameter Seal Adjustment

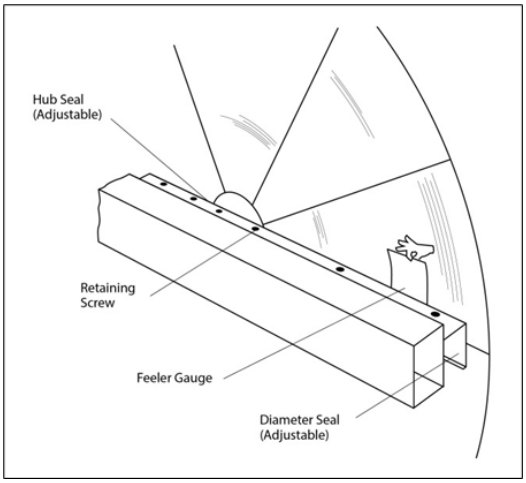

Figure 24: Hub Seal Adjustment

6.12.1.5. Service

CAUTION

Disconnect electrical power before servicing the energy recovery cassette. Always keep your hands away from the bearing support beam when installing or removing segments. Failure to do so could result in severe injury to fingers or hands.

Wheel segments are secured to the wheel frame by a Segment Retainer, which pivots on the wheel rim and is held in place by a Segment Retaining Catch.

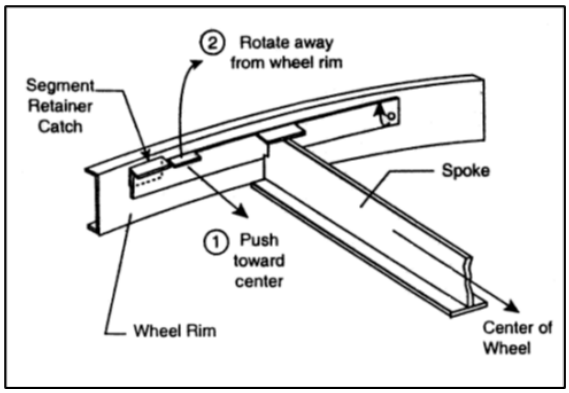

Figure 25: Segment Retainers

To install wheel segments, follow steps one through five below. Reverse procedure for segment removal.

1. Unlock two segment retainers (one on each side of the selected segment opening.
2. With the embedded stiffener facing the motor side, insert the nose of the segment between the hub plates.

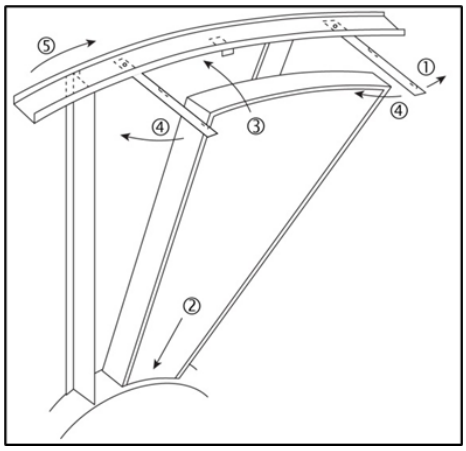

Figure 26: Segment Installation

3. Holding segment by the two outer corners, press the segment towards the center of the wheel and inwards against the spoke flanges. If hand pressure does not fully seat the segment, insert the flat tip of a screwdriver between the wheel rim and outer corners of the segment and apply downward force while guiding the segment into place.
4. Close and latch each Segment Retainer under Segment Retaining Catch.
5. Slowly rotate the wheel 180°. Install the second segment opposite the first for counterbalance. Rotate the two installed segments 90° to balance the wheel while the third segment is installed. Rotate the wheel 180° again to install the fourth segment opposite the third. Repeat this sequence with the remaining four segments.

6.12.1.6. Wheel Drive Motor and Pulley Replacement

1. Disconnect power to the wheel drive motor.
2. Remove the belt from the pulley and position it temporarily around the wheel rim.
3. Loosen the set screw in the wheel drive pulley using a hex head wrench and remove the pulley from the motor drive shaft.
4. While supporting the weight of the drive motor in one hand, loosen and remove (4) mounting bolts.
5. Install replacement motor with hardware kit supplied.
6. Install the pulley to the dimension as shown and secure the set screw to the drive shaft.
7. Stretch the belt over the pulley and engage it in the groove.
8. Follow the start-up procedure.

6.12.1.7. Belt Replacement

1. Obtain access to the pulley side bearing access plate if bearing access plates are provided. Remove two bearing-access-plate retaining screws and the access plate.
2. Using a hexagonal wrench, loosen the set screw in the bearing locking collar. Using a light hammer and drift (in the drift pin hole), tap the collar in the direction of wheel rotation to unlock the collar. Remove collar.
3. Using a socket wrench with extension, remove two nuts that secure the bearing housing to the bearing support beam. Slide bearing from the shaft. If not removable by hand, use a bearing puller.
4. Form a small loop of the belt and pass it through the hole in the bearing support beam. Grasp the belt at the wheel hub and pull the entire belt down.

Note: Slight hand pressure against the wheel rim will lift the weight of the wheel from the inner race of bearing to assist bearing removal and installation.

CAUTION

Protect hands and belt from possible sharp edges of the hole in the Bearing Support Beam.

5. Loop the trailing end of the belt over the shaft (belt is partially through the opening).
6. Reinstall the bearing onto the wheel shaft, being careful to engage the two locating pins into the holes in the bearing support beam. Secure the bearing with two self-locking nuts.
7. Install the belts around the wheel and pulley according to the instructions provided with the belt.
8. Reinstall diameter seals or hub seals and tighten the retaining screws. Rotate wheel in clockwise direction to determine that wheel rotates freely with slight drag on seals.
9. Reinstall bearing locking collar. Rotate collar by hand in the direction the wheel rotates (see label provided on each cassette for wheel rotation).
10. Lock in position by tapping drift pin hole with hammer and drift. Secure in position by tightening set screw.
11. Reinstall Bearing Access Cover.
12. Apply power to wheel and ensure that the wheel rotates freely without interference.

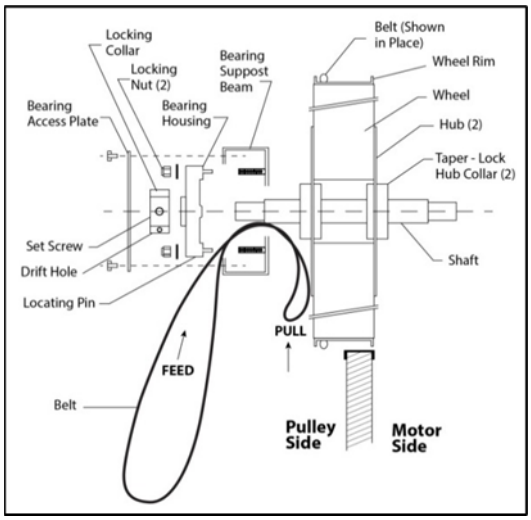

Figure 27: Belt Replacements

7. STARTUP

(See the back of the manual for the startup form.)

WARNING

Improper installation, adjustment, alteration, service, or maintenance can cause property damage, personal injury, or loss of life. Startup and service must be performed by a Factory Trained Service Technician. A copy of this IOM must be kept with the unit.

WARNING

Electric shock hazard. Shut off all electrical power to the unit to avoid shock hazard or injury from rotating parts.

During startup, it is necessary to perform routine checks on the performance of the unit. This includes checking of the air flow, the air filters, condenser water flow, and refrigerant charge.

7.1. Supply Fans

SB Series units are equipped with direct drive backward curved plenum supply fan assemblies that deliver the air volume specified according to unit size and job requirements.

7.2. Fan Set Screws Adjustment

For single set screw applications, tighten the set screw to the required torque setting (Table 14) using a calibrated torque wrench. For double set screw applications, tighten one set screw to half of the required torque setting (Table 14) using a calibrated torque wrench. Tighten the second set screw to the full required torque setting then tighten the first set screw to the full required torque setting.

Table 14: Plenum Fan Set Screw Specifications

Set Screw Diameter	Torque (Nm [IN-LBS])
6.4 mm (1/4")	9 [80]
7.9 mm (5/16")	14.2 [126]
9.5 mm (3/8")	27.12 [240]

The gap tolerances that are allowed between the blower and the inlet cone for the plenum fan blowers are shown in Figure 28. The inlet cone can be moved as necessary to center the cone in relation to the blower. The blower can be moved on the motor shaft to set the correct overlap. These tolerances are critical to the performance of the blower.

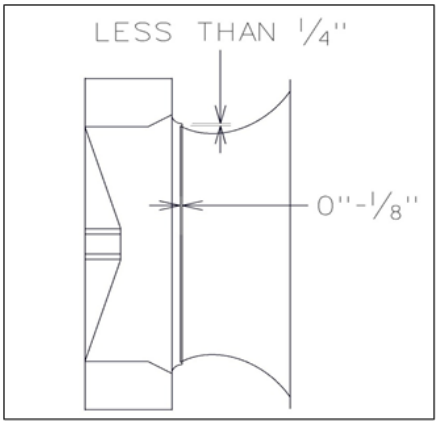

Figure 28: Plenum Fan Gap Tolerances

7.3. Fan Air Flow Adjustment

A specific air volume is delivered by the fans with air volume bands in the blower wheels, Electronically Commutated Motors (ECM), or Variable Frequency Drives (VFD). Field air flow adjustment may be required at startup.

Air volume bands for the wheels are sized according to the unit's air delivery specifications and can also be ordered from the factory for field installation.

7.3.1. Electrically Commutated Motor Airflow Adjustment

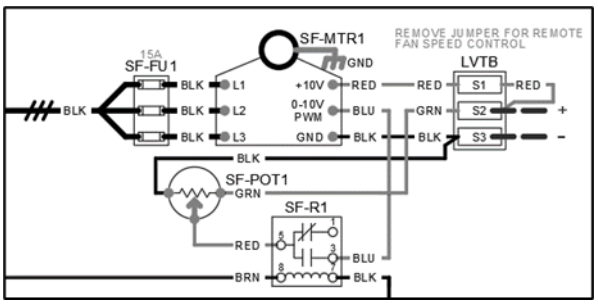

Figure 29: Typical Wiring Diagram with EC Motor

If the application is for the motor to run at a constant speed, the potentiometer can be utilized without any change. If the application is to vary the motor speed for changing conditions, remove the jumper indicated on the terminal strip (red wire).

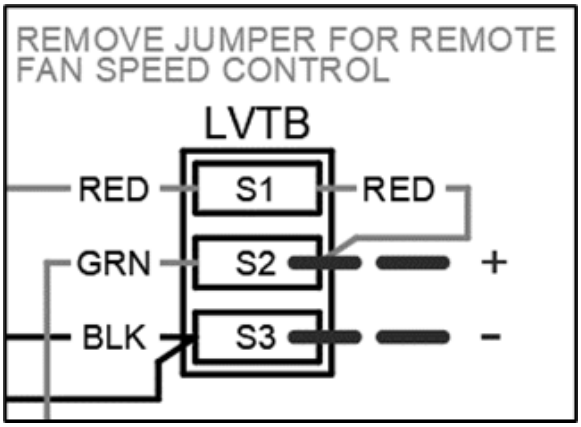

Figure 30: Shows the Jumper That Is to Be Removed (Jumped Between S1 And S2)

Note: The potentiometer is still active in the electrical loop. Refer to Figure 29.

Set the potentiometer dial for the maximum fan speed for a particular application. Maximum fan speed is determined by the ECat submittal. Typically, this max speed will be the rpm set at the factory.

The fan speed can be modulated using the 0–10VDC input signal.

To check fan output from the factory, the potentiometer can be dialed to 100%. By sending a 5V signal*, for instance, the rpm can be measured, and this reading can be converted to cubic feet of air moved by the fan.

It is advised that a medium-range signal* be utilized for this procedure. The highest signal sent by the controller must then be determined by adjustment.

7.3.2. VFD with Permanent Magnet Motor Airflow Adjustment

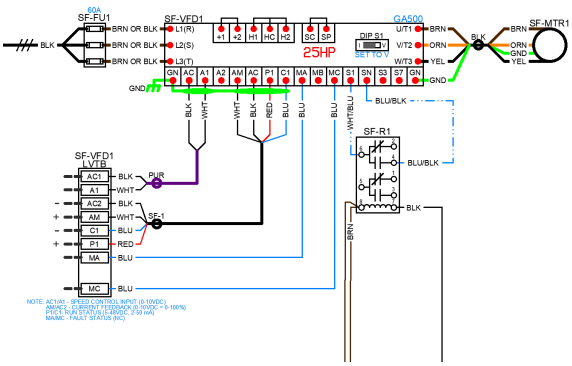

Figure 31: Typical Wiring Diagram with VFD PM motor

On Controls by Others units, fan speed terminals will be called out in blue text below the VFD terminal block. Enable terminal for the supply fan will be labeled 'G' and located in the main unit terminal strip. Fan speed on these units can also be adjusted by accessing the VFD programing. VFD terminals and set point vary slightly depending on the VFD manufacture.

7.4. Filters

Do not operate the unit without filters in place. Check the unit for correct filter placement during startup. Operation of the equipment without filters will result in a clogged evaporator coil.

CAUTION

Protect your hands and the belt from possible sharp edges of the hole in the Bearing Support Beam.

7.5. Adjustment Refrigerant Charge

Adjusting the charge of a system in the field must be based on the determination of liquid sub-cooling and evaporator superheat. On a system with a TXV liquid sub-cooling is more representative of the charge than evaporator superheat, but both measurements must be taken.

CAUTION

The Clean Air Act of 1990 bans the intentional venting of refrigerant (CFCs and HCFCs) as of July 1, 1992. Approved methods of recovery, recycling, or reclaiming must be followed. Fines and/or incarceration may be levied for non-compliance.

7.5.1. Before Charging

Units being charged must be at or near full load conditions before adjusting the charge. Units equipped with hot gas reheat must be charged with the hot gas reheat valves closed while the unit is in cooling mode to get the proper charge. After charging, operate the unit in reheat (dehumidification) mode to check for correct operation.

After adding or removing a charge, the system must be allowed to stabilize, typically 10–15 minutes, before making any other adjustments.

The type of unit and options determine the ranges for liquid sub-cooling and evaporator superheat. Refer to the tables below when determining the proper sub-cooling.

7.5.2. Checking Liquid Sub-Cooling

Measure the temperature of the liquid line as it leaves the condenser.

Read the gauge pressure at the liquid line close to the point where the temperature was taken. Use the liquid line pressure, as it will vary from the discharge pressure due to the condenser pressure drop.

Convert the pressure obtained to a saturated temperature using the appropriate refrigerant temperature-pressure chart.

Subtract the measured liquid line temperature from the saturated temperature to determine the liquid sub-cooling.

Compare the calculated sub-cooling to the table below for the appropriate unit type and options.

7.5.3. Checking Evaporator Superheat

Measure the temperature of the suction line close to the compressor.

Read the gauge pressure at the suction line close to the compressor.

Convert the pressure obtained to a saturated temperature using the appropriate refrigerant temperature-pressure chart.

Subtract the saturated temperature from the measured suction line temperature to determine the evaporator superheat.

Compare the calculated superheat to the table below for the appropriate unit type and options.

CAUTION

Do Not Overcharge!
Refrigerant overcharging leads to excess refrigerant in the condenser coils, resulting in elevated compressor discharge pressure. The maximum allowable charge of any single circuit is 28.1 kg (992 oz).

Table 15: Acceptable Water-Cooled Refrigeration Circuit Values (Metric)

Water-Cooled Condenser/ Water Source Heat Pump (°C)	
Sub-Cooling	3.3–5.6
Sub-Cooling with Hot Gas Reheat	4.4–6.7
Superheat	4.4–8.3

Table 16: Acceptable Water–Cooled Refrigeration Circuit Values (Imperial)

Water-Cooled Condenser/ Water Source Heat Pump (°F)	
Sub-Cooling	6–10
Sub-Cooling with Hot Gas Reheat	8–12
Superheat	8–15

CAUTION

The thermal expansion valve must be adjusted to approximately 4.4–8.3 (8–15°F) of suction superheat. Failure to have sufficient superheat will damage the compressor and void the warranty.

7.5.4. Adjusting Sub-Cooling and Superheat Temperatures

The system is overcharged if the sub-cooling temperature is too high and the evaporator is fully loaded (low loads on the evaporator result in increased sub-cooling), and the evaporator superheat is within the temperature range as shown in the table above (high superheat results in increased sub-cooling).

Correct an overcharged system by reducing the amount of refrigerant in the system to lower the sub-cooling.

CAUTION

Do Not Overcharge!
Refrigerant overcharging leads to excess refrigerant in the condenser coils resulting in elevated compressor discharge pressure. The maximum charge for any circuit is 19.8 kg (700 oz).

The system is undercharged if the superheat is too high and the sub-cooling is too low

Correct an undercharged system by adding refrigerant to the system to reduce superheat and raise sub-cooling.

If the sub-cooling is correct and the superheat is too high, the TXV may need adjustment to correct the superheat.

7.6. Freeze Stat Startup

Freeze Stat is an adjustable temperature sensor (-23.3–21.1°C [-10–70°F]) mounted on the tubing of the first cooling circuit and wired to de-energize all cooling circuits if tubing temperature falls below the setpoint. This option is used to prevent the freezing of the evaporator coil.

Recommended Setting: 0–1.7°C (32–35°F).

Table 17: Minimum Airflow and Room Areas

Charge of Largest Circuit in kg (oz)		Min Circulation Airflow in m^3/hr (CFM)		Minimum Room Area in m^2 (ft^2)						Floor area for unventilated storage	
				1.8 m (6 ft) ceiling/release height		3 m (10 ft) ceiling/release height		3.7 m (12 ft) ceiling/release height			
1.4	50	**144**	300	**5**	57	**3**	34	**3**	28	**1**	15
1.9	66	**190**	300	**7**	76	**4**	45	**3**	37	**2**	26
2.3	82	**236**	300	**9**	94	**5**	56	**4**	46	**4**	40
2.8	98	**282**	300	**10**	112	**6**	67	**5**	55	**5**	58
3.2	114	**328**	300	**12**	131	**7**	78	**6**	64	**7**	78
3.7	130	**374**	300	**14**	149	**8**	89	**7**	72	**9**	101
4.1	146	**419**	300	**16**	167	**9**	100	**8**	81	**12**	128
4.6	162	**465**	300	**17**	186	**10**	111	**8**	90	**15**	157
5.0	178	**511**	301	**19**	204	**11**	122	**9**	99	**18**	190
5.5	194	**557**	328	**21**	222	**12**	133	**10**	108	**21**	226
6.0	210	**603**	355	**22**	241	**13**	144	**11**	117	**25**	265
6.4	226	**649**	382	**24**	259	**14**	155	**12**	126	**28**	306
6.9	242	**695**	409	**26**	277	**15**	166	**13**	135	**33**	351
7.3	258	**741**	436	**27**	296	**16**	177	**13**	144	**37**	399
7.8	274	**787**	463	**29**	314	**17**	188	**14**	153	**42**	450
8.2	290	**833**	490	**31**	332	**19**	199	**15**	162	**47**	505
8.7	306	**879**	517	**33**	351	**20**	210	**16**	171	**52**	562
9.1	322	**925**	545	**34**	369	**21**	221	**17**	179	**58**	622
9.6	338	**971**	572	**36**	387	**22**	232	**17**	188	**64**	685
10.0	354	**1017**	599	**38**	405	**23**	243	**18**	197	**70**	752
10.5	370	**1063**	626	**39**	424	**24**	254	**19**	206	**76**	821
10.9	386	**1109**	653	**41**	442	**25**	265	**20**	215	**83**	894
11.4	402	**1155**	680	**43**	460	**26**	276	**21**	224	**90**	970
11.9	418	**1201**	707	**44**	479	**27**	287	**22**	233	**97**	1048
12.3	434	**1247**	734	**46**	497	**28**	298	**22**	242	**105**	1130
12.8	450	**1293**	761	**48**	515	**29**	309	**23**	251	**113**	1215
13.2	466	**1339**	788	**50**	534	**30**	320	**24**	260	**121**	1303
13.7	482	**1385**	815	**51**	552	**31**	331	**25**	269	**129**	1394
14.1	498	**1431**	842	**53**	570	**32**	342	**26**	278	**138**	1488
14.6	514	**1477**	869	**55**	589	**33**	353	**27**	286	**147**	1585
15.0	530	**1523**	896	**56**	607	**34**	364	**27**	295	**157**	1685
15.5	546	**1569**	923	**58**	625	**35**	375	**28**	304	**166**	1789
15.9	562	**1615**	950	**60**	644	**36**	386	**29**	313	**176**	1895
16.4	578	**1661**	977	**62**	662	**37**	397	**30**	322	**186**	2004

Table 18: Minimum Airflow and Room Areas (Continued)

Charge of Largest Circuit in kg (oz)		Min Circulation Airflow in m^3/hr (CFM)		Minimum Room Area in m^2 (ft^2)						Floor area for unventilated storage	
				1.8 m (6 ft) ceiling/release height		3 m (10 ft) ceiling/release height		3.7 m (12 ft) ceiling/release height			
16.8	594	**1707**	1005	**63**	680	**38**	408	**31**	331	**197**	2117
17.3	610	**1753**	1032	**65**	699	**39**	419	**32**	340	**207**	2232
17.7	626	**1799**	1059	**67**	717	**40**	430	**32**	349	**218**	2351
18.2	642	**1845**	1086	**68**	735	**41**	441	**33**	358	**230**	2473
18.7	658	**1891**	1113	**70**	754	**42**	452	**34**	367	**241**	2598
19.1	674	**1937**	1140	**72**	772	**43**	463	**35**	376	**253**	2725
19.6	690	**1983**	1167	**73**	790	**44**	474	**36**	385	**265**	2856
19.8	700	**2011**	1184	**74**	802	**45**	481	**36**	390	**273**	2940

Table 19: Min and Max Charge per Cabinet Size

SB Cabinet Size	Minimum Charge	Maximum Charge
B	50	275
C	110	500
D		700

Table 20: R-454B Refrigerant Temperature-Pressure Chart (Metric)

°C	KPA	°C	KPA	°C	KPA	°C	KPA	°C	KPA
-6.7	484.5	**8.3**	843.3	**23.3**	1348.0	**38.3**	2034.6	**53.3**	2946.9
-6.1	495.6	**8.9**	859.3	**23.9**	1370.0	**38.9**	2064.1	**53.9**	2985.7
-5.6	506.9	**9.4**	875.3	**24.4**	1392.2	**39.4**	2093.9	**54.4**	3024.9
-5.0	518.2	**10.0**	891.6	**25.0**	1414.6	**40.0**	2123.9	**55.0**	3064.5
-4.4	529.7	**10.6**	908.1	**25.6**	1437.3	**40.6**	2154.3	**55.6**	3104.5
-3.9	541.5	**11.1**	924.8	**26.1**	1460.3	**41.1**	2185.0	**56.1**	3144.9
-3.3	553.3	**11.7**	941.7	**26.7**	1483.5	**41.7**	2216.1	**56.7**	3185.8
-2.8	565.4	**12.2**	958.8	**27.2**	1507.0	**42.2**	2247.4	**57.2**	3227.0
-2.2	577.6	**12.8**	976.2	**27.8**	1530.8	**42.8**	2279.1	**57.8**	3268.6
-1.7	589.9	**13.3**	993.7	**28.3**	1554.8	**43.3**	2311.1	**58.3**	3310.7
-1.1	602.5	**13.9**	1011.5	**28.9**	1579.0	**43.9**	2343.5	**58.9**	3353.2
-0.6	615.2	**14.4**	1029.4	**29.4**	1603.6	**44.4**	2376.2	**59.4**	3396.1
0.0	628.1	**15.0**	1047.6	**30.0**	1628.4	**45.0**	2409.2	**60.0**	3439.5
0.6	641.2	**15.6**	1066.0	**30.6**	1653.5	**45.6**	2442.6	**60.6**	3483.3
1.1	654.4	**16.1**	1084.7	**31.1**	1678.8	**46.1**	2476.2	**61.1**	3527.6
1.7	667.8	**16.7**	1103.5	**31.7**	1704.4	**46.7**	2510.3	**61.7**	3572.3
2.2	681.4	**17.2**	1122.6	**32.2**	1730.4	**47.2**	2544.7	**62.2**	3617.4
2.8	695.2	**17.8**	1141.9	**32.8**	1756.6	**47.8**	2579.4	**62.8**	3663.0
3.3	709.2	**18.3**	1161.5	**33.3**	1783.0	**48.3**	2614.5	**63.3**	3709.2
3.9	723.3	**18.9**	1181.3	**33.9**	1809.9	**48.9**	2650.0	**63.9**	3755.7
4.4	737.6	**19.4**	1201.3	**34.4**	1836.9	**49.4**	2685.7	**64.4**	3802.7
5.0	752.2	**20.0**	1221.5	**35.0**	1864.3	**50.0**	2721.9	**65.0**	3850.3
5.6	766.9	**20.6**	1242.0	**35.6**	1891.9	**50.6**	2758.5	**65.6**	3898.4
6.1	781.8	**21.1**	1262.8	**36.1**	1919.8	**51.1**	2795.4		
6.7	796.9	**21.7**	1283.7	**36.7**	1948.1	**51.7**	2832.7		
7.2	812.2	**22.2**	1304.9	**37.2**	1976.7	**52.2**	2870.4		
7.8	827.7	**22.8**	1326.3	**37.8**	2005.5	**52.8**	2908.4		

Table 21: R-454B Refrigerant Temperature-Pressure Chart (Imperial)

°F	PSIG	°F	PSIG	°F	PSIG	°F	PSIG	°F	PSIG
20	70.3	**47**	122.3	**74**	195.5	**101**	295.1	**128**	427.4
21	71.9	**48**	124.6	**75**	198.7	**102**	299.4	**129**	433.0
22	73.5	**49**	127.0	**76**	201.9	**103**	303.7	**130**	438.7
23	75.2	**50**	129.3	**77**	205.2	**104**	308.0	**131**	444.5
24	76.8	**51**	131.7	**78**	208.5	**105**	312.5	**132**	450.3
25	78.5	**52**	134.1	**79**	211.8	**106**	316.9	**133**	456.1
26	80.3	**53**	136.6	**80**	215.2	**107**	321.4	**134**	462.0
27	82.0	**54**	139.1	**81**	218.6	**108**	326.0	**135**	468.0
28	83.8	**55**	141.6	**82**	222.0	**109**	330.6	**136**	474.1
29	85.6	**56**	144.1	**83**	225.5	**110**	335.2	**137**	480.2
30	87.4	**57**	146.7	**84**	229.0	**111**	339.9	**138**	486.3
31	89.2	**58**	149.3	**85**	232.6	**112**	344.6	**139**	492.6
32	91.1	**59**	151.9	**86**	236.2	**113**	349.4	**140**	498.8
33	93.0	**60**	154.6	**87**	239.8	**114**	354.3	**141**	505.2
34	94.9	**61**	157.3	**88**	243.5	**115**	359.1	**142**	511.6
35	96.9	**62**	160.1	**89**	247.2	**116**	364.1	**143**	518.1
36	98.8	**63**	162.8	**90**	251.0	**117**	369.1	**144**	524.6
37	100.8	**64**	165.6	**91**	254.8	**118**	374.1	**145**	531.3
38	102.9	**65**	168.5	**92**	258.6	**119**	379.2	**146**	538.0
39	104.9	**66**	171.3	**93**	262.5	**120**	384.3	**147**	544.7
40	107.0	**67**	174.2	**94**	266.4	**121**	389.5	**148**	551.5
41	109.1	**68**	177.2	**95**	270.4	**122**	394.8	**149**	558.4
42	111.2	**69**	180.1	**96**	274.4	**123**	400.1	**150**	565.4
43	113.4	**70**	183.1	**97**	278.4	**124**	405.4		
44	115.6	**71**	186.2	**98**	282.5	**125**	410.8		
45	117.8	**72**	189.3	**99**	286.7	**126**	416.3		
46	120.0	**73**	192.4	**100**	290.9	**127**	421.8		

8. OPERATION

Unit operations must be controlled with a thermostat or unit controller, never at the main power supply, except for emergencies or complete shutdown of the unit.

8.1. Refrigerant Detection System

Each unit is equipped with a Refrigerant Detection System (RDS) to detect leaked refrigerant within the conditioned airstream and in the cabinet. The RDS system consists of refrigerant detection sensors in the conditioned airstream and cabinet connected to a corresponding mitigation board. In the event of a refrigerant leak, the RDS sensors will send an alarm to the mitigation board. Each A2L mitigation board is equipped with an alarm output in the form of an NO/NC relay.

8.1.1. Applications using AAON VCC-X Controls

In the event of an airstream RDS alarm, the compressor operation is disabled, and the indoor blower is enabled to provide circulation airflow in accordance with UL 60335-2-40. In the event of a Cabinet RDS alarm, compressor operation is disabled. The indoor blower, and any form of heat, will resume normal operation. RDS alarm outputs are available via BACNet communication through the VCC-X controller.

For applications not using AAON VCC-X controls, mitigation board outputs will be wired to the low voltage terminal block.

In all cases, the mitigation board and VCCX-X board will remain in alarm state for five minutes after the RDS sensor has cleared the alarm below the concentration setpoint.

For VAV applications and applications utilizing zone dampers, the VAV boxes and zone dampers must be wired to the mitigation board output to open all VAV boxes and zone dampers to allow for the required circulation airflow to prevent stagnation of leaked refrigerant. Other applications requiring additional refrigerant leak mitigation measures as required by local code and ASHRAE 15 may be notified of detected refrigerant by this alarm output.

Verify functionality of RDS by removing the sensor connection at the mitigation board and ensuring that all sequences above take place, including the opening of VAV boxes and zone dampers, and additional mitigation procedures, if applicable. Refer to the A2L Mitigation Board Technical Guide for sensor location.

Smoke control procedures may override the RDS alarm functions.

CAUTION

Certain applications may allow the unit to bring in unconditioned air. Freeze protection needs to be considered in the final application.

CAUTION

Additional mitigation procedures or fault conditions initiated outside of AAON controls are the responsibility of the Building Engineer and must give appropriate priority in accordance with local codes.

8.2. Packaged DX Cooling Operation and Control

When a call for cooling is made the supply fan motors and compressors will energize.

WARNING

Compressor Cycling:
3 Minute Minimum Off Time - To prevent motor overheating compressors must cycle off for a minimum of 3 minutes.
5 Minute Minimum On Time - To maintain the proper oil level compressors must cycle on for a minimum of 5 minutes.
The cycle rate must not exceed 7 starts per hour.

8.3. Electric Heating Operation

When a call for heating (G and W1, W2, etc.) is made the supply fan motors and electric resistance heaters will energize. Heating is accomplished by passing electrical current through a specified amount of resistance heaters which will produce the required heat.

On a fault condition, the main limit located in the supply air or the auxiliary limit located downstream of the supply blower will remove power from all contactors.

8.4. Steam or Hot Water Preheating Operation

Valve control for steam and hot water heating coils are by others. Heating is accomplished by passing steam or hot water through the steam or hot water coil assembly.

WARNING

Before performing work that can result in release of a flammable refrigerant, inspect the area to ensure it is free of any potential ignition sources. “No Smoking” signs are to be displayed while performing work.

9. MAINTENANCE

(See back of the manual for maintenance log.)

At least once each year, a qualified service technician must check out the unit. Supply fans, evaporator coils, and air filters must be inspected monthly.

WARNING

Improper installation, adjustment, alteration, service or maintenance can cause property damage, personal injury, or loss of life. Installation and service must be performed by a qualified technician. A copy of this IOM must be kept with the unit.

Periodically during operation, it is necessary to perform routine service checks on the performance of the unit. This includes checking the air flow, the air filters, the condenser water flow, and the refrigerant charge.

See the Startup section for information on air flow adjustment and refrigerant charge adjustment.

9.1. Refrigerant Removal and Evacuation

If removal of refrigerant is required for any maintenance or servicing, conventional procedures must be used, and removal of refrigerant must be in accordance with local and national regulations.

Safety precautions must be taken prior to beginning work to ensure that the risk of fire due to flammable refrigerants is minimized. Work is to be undertaken under a controlled procedure to reduce the amount of refrigerant vapor present while work is being performed. All maintenance staff and others working in the area are to be instructed on the nature of work being performed. Care should be taken to ensure that working in a confined space is avoided.

Check the area with a refrigerant detector suitable for use with the refrigerant prior to and during work in order to be aware of a potential flammable environment. Keep a dry powder or CO_2 fire extinguisher nearby if any hot work is being performed.

Ensure that the work area is sufficiently ventilated before breaking into the system. Ventilation must continue throughout all of the work. Ensure that ventilation safely removes flammable refrigerant to an area that will adequately disperse refrigerant to avoid concentration above flammable levels.

Refrigerant must be recovered into the correct recovery cylinders in accordance with local and national regulations. Recovery cylinders must be labeled properly. Ensure that the correct number of cylinders are available for holding the entire charge of the system. Cylinders must have pressure relief and shut-off valves that are in proper working order. Fully evacuate a recovery cylinder before use.

The recovery equipment must be in good working order with a set of instructions concerning the equipment at hand. Ensure that the equipment is suitable for the recovery of flammable refrigerant used. If in doubt, the manufacturer should be consulted. In addition, a set of calibrated weighing scales must be available and in good working order. Ensure hoses are complete with leak-free disconnect couplings and in good condition.

When removing refrigerant to open the system, evacuate the system and flush or purge the system continuously with an inert gas when using a flame to open the circuit.

The system must be purged with oxygen-free nitrogen to render the appliance safe for flammable refrigerant. Compressed air or oxygen must not be used. When pulling a vacuum, ensure that the outlet of the vacuum pump is not near any potential ignition source and in a well-ventilated area.

The recovered refrigerant is to be processed according to local legislation in the correct recovery cylinder, and the relevant waste transfer note is to be arranged. Do not mix refrigerants in recovery units, and especially not in cylinders.

If compressors or compressor oils are to be removed, ensure that they have been evacuated to an acceptable level to make certain that flammable refrigerant does not remain within the lubricant. Do not heat the compressor body by using an open flame or other ignition sources to accelerate this process. Remove any drained oil safely.

9.2. DX Cooling

Set unit controls to cooling mode of operation with supply fans on. Check the fans for correct operating direction, amperage, and voltage. Check compressor operation, rotation, amperage, and voltage to the unit nameplate (check the amperage on the load side of the compressor contactor).

9.3. Condensate Drain Pan

Drain pans will have moisture present and require periodic cleaning to prevent microbial growth. Cleaning of the drain pans will also prevent any possible plugging of the drain lines and overflow of the pan itself. Cleaning of the drain pans and inside of the unit must be done only by qualified personnel.

9.4. E-Coated Coil Cleaning

Documented routine cleaning of e-coated coils is required to maintain coating warranty coverage for condenser coils. The E-Coated Coil Maintenance Record sheet is provided in this document.

WARNING

Electric shock hazard. Shut off all electrical power to the unit to avoid shock hazard or injury from rotating parts.

Remove surface loaded fibers or dirt prior to water rinse to prevent restriction of airflow. If unable to backwash the side of the coil opposite of the coils entering air side, then remove surface loaded fibers or dirt with a vacuum cleaner. If a vacuum cleaner is not available, a soft, non-metallic bristle brush may be used. In either case, the tool must be applied in the direction of the fins. Coil surfaces can be easily damaged (fin edges bent over) if the tool is applied across the fins.

Use of a water stream, such as a garden hose, against a surface loaded coil will drive fibers, dirt, and salts into the coil. This will make cleaning efforts more difficult. Surface loaded fibers must be completely removed prior to using a low velocity clean water rinse.

A monthly clean water rinse is recommended for coils that are applied in coastal or industrial environments to help remove chlorides, dirt, and debris. It is very important when rinsing that the water temperature is less than 130°F and pressure is less than 100 psig to avoid damaging the fin edges. An elevated water temperature (not to exceed 130°F) will reduce surface tension, increasing the ability to remove chlorides and dirt.

WARNING

High velocity water from a pressure washer or compressed air must only be used at a very low pressure to prevent fin and/or coil damage. The force of the water or air jet may bend the fin edges and increase the airside pressure drop. Reduced unit performance or nuisance unit shutdowns may occur.

Quarterly cleaning is essential to extend the life of an e-coated coil and is required to maintain coating warranty coverage. Coil cleaning must be part of the unit's regularly scheduled maintenance procedures. Failure to clean an e-coated coil will void the warranty and may result in reduced efficiency and durability.

WARNING

Harsh chemicals, household bleach, or acid cleaners must not be used to clean outdoor or indoor e-coated coils. These cleaners can be very difficult to rinse out of the coil and can accelerate corrosion and attack the E-coating. If there is dirt below the surface of the coil, use the recommended coil cleaners.

For routine quarterly cleaning, first clean the coil with the approved coil cleaner below. After cleaning the coils with the approved cleaning agent, use the approved chloride remover to remove soluble salts and revitalize the unit.

9.4.1. Recommended Coil Cleaner

The following cleaning agent, when used in accordance with the manufacturer's directions on the container for proper mixing and cleaning, has been approved for use on e-coated coils to remove mold, mildew, dust, soot, greasy residue, lint, and other particulates:

Enviro-Coil Cleaner: AAON PN: V82540
GulfClean ™ Coil Cleaner: AAON PN: G074480

9.4.2. Recommended Chloride Remover

GulfClean Salt Reducer™ : AAON PN: G074490

GulfClean Salt Reducer™ is used to remove soluble salts from the e-coated coil. Follow the manufacturer's instructions. This product is not intended for use as a degreaser. Any grease or oil film must first be removed with GulfClean ™ Coil Cleaner.

Remove Barrier - First, ensure the power to the unit is off and locked out. Clean the area around the unit if needed to ensure leaves, grass, or loose debris will not be blown into the coil. Soluble salts adhere to the substrate. For the effective use of this product, the product must be able to come in contact with the salts. These salts may be beneath any soils, grease, or dirt; therefore, these barriers must be removed prior to application of this product. As in all surface preparation, the best work yields the best results.

Application- Apply GulfClean ™ Coil Cleaner directly onto the substrate. Sufficient product must be applied uniformly across the substrate to thoroughly wet out the surface, with no areas missed. This may be accomplished by the use of a pump-up sprayer or a conventional spray gun. Apply the cleaner to the unit's interior air exiting side coil surfaces first. Work in sections/panels, moving side to side and from top to bottom. Allow the cleaning solution to soak for 5 to 10 minutes. Then move on to the exterior using the same method.

Rinse - Using pressurized potable water such as a garden hose (< 689.5 kPa [100 psi]), rinse the coils and continue to always work in sections/panels. Continue until all coil areas on the inside of the unit have been rinsed.

Note: Coils must always be cleaned/back flushed, opposite the airflow, to prevent impacting the dirt into the coil.

Repeat these steps with GulfClean ™ Salt Reducer. When finished, replace all panels and tops that were removed.

9.5. Supply Fans

CAUTION

Blower wheels must be inspected for excessive dust buildup periodically and cleaned if required. Excessive dust buildup on blower wheels may cause an unbalanced state, leading to vibration and/or component failure. Damages due to excessive dust buildup will not be covered under the factory warranty.

WARNING

Electric shock hazard. Shut off all electrical power to the unit to avoid shock hazard or injury from rotating parts.

9.5.1. Supply Fan Lubrication

All original blower motors and bearings are furnished with factory lubrication. Some applications will require that bearings be re-lubricated periodically. The schedule will depend on the operating duty, temperature variations, or other severe atmospheric conditions.

Bearings must be re-lubricated when at normal operating temperatures but not running. Rotate the fan shaft by hand and add only enough grease to purge the seals. Do not overlubricate.

9.5.2. Recommended Greases

SHELL OIL - DOLIUM R
CHEVRON OIL - SRI No. 2
TEXACO INC. - PREMIUM R

9.6. Filter Replacement

Monthly filter inspection is required to maintain optimum unit efficiency.

WARNING

Electric shock hazard. Shut off all electrical power to the unit to avoid shock hazard or injury from rotating parts.

Filters must be replaced monthly. Filters are located upstream of the evaporator coil. Open access panel and pull filters straight out to inspect all of the filters. Replace filters with the size indicated on each filter. Arrow on the replacement filters must point towards the blower.

9.7. UV Lights

Some units include UV lights for airstream disinfection. The UV fixture is installed directly downstream of the cooling coil. Door interlock switches are provided with this option. UV lamps ship loose in the vestibule and require installation during startup.

Useful lamp life shall be 9000 hours (minimum) with no more than a 15% output loss at the end of the lamp's life. Use AAON Part # R68850 for lamp replacement.

WARNING

UV Lights:
Never expose eyes or skin to UVC light from any source, as personal injury may result. Wear gloves, face shield/glasses (per ANSI Z87.1), and cover all exposed skin.

9.8. Filter Information

Table 22: 3–5 ton (B Cabinet) Pre and Unit Filters

Feature 6A	Quantity/Size	Type
0	No Pre Filters	
A	(1) 24" x 24" x 2"	Pleated, MERV 8
Feature 6B	**Quantity/Size**	**Type**
0	No Standard Filters	
A	(1) 24" x 24" x 2"	Pleated, MERV 8
B	(1) 24" x 24" x 4"	Pleated, MERV 8
C		Pleated, MERV 11
D		Pleated, MERV 13
E		Pleated, MERV 14
F		Carbon

Table 23: 6–10 ton (C Cabinet) Pre and Unit Filters

Feature 6A	Quantity/Size	Type
0	No Pre Filters	
A	(4) 16" x 20" x 2"	Pleated, MERV 8
Feature 6B	**Quantity/Size**	**Type**
0	No Standard Filters	
A	(4) 16" x 20" x 2"	Pleated, MERV 8
B	(4) 16" x 20" x 4"	Pleated, MERV 8
C		Pleated, MERV 11
D		Pleated, MERV 13
E		Pleated, MERV 14
F		Carbon

Table 24: 14–18 ton (D Cabinet) Pre and Unit Filters

Feature 6A	Quantity/Size	Type
0	No Pre Filters	
A	(4) 18" x 24" x 2"	Pleated, MERV 8
Feature 6B	**Quantity/Size**	**Type**
0	No Standard Filters	
A	(4) 18" x 24" x 2"	Pleated, MERV 8
B	(4) 18" x 24" x 4"	Pleated, MERV 8
C		Pleated, MERV 11
D		Pleated, MERV 13
E		Pleated, MERV 14
F		Carbon

Table 25: 3–5 ton (B Cabinet) Mixing Box Filters

Feature 6A	Quantity/Size	Type
A	(1) 24" x 24" x 2" (located in the mixing box)	2" Pleated, MERV 8 Pre-Filters
Feature 6B	**Quantity/Size**	**Type**
G	(1) 24" x 24" x 4" (located in the mixing box), and (1) 24" x 24" x 4" (located in the unit)	Pleated, MERV 11, and Carbon
H		Pleated, MERV 13, and Carbon
J		Pleated, MERV 14, and Carbon
K		Pleated, MERV 11, and Pleated, MERV 13
L		Pleated, MERV 11, and Pleated, MERV 14

Table 26: 6–10 ton (C Cabinet) Mixing Box Filters

Feature 6A	Quantity/Size	Type
A	(4) 16" x 20" x 2" (located in the mixing box)	2" Pleated, MERV 8 Pre-Filters
Feature 6B	**Quantity/Size**	**Type**
G	(4) 16" x 20" x 4" (located in the mixing box), and (4) 16" x 20" x 4" (located in the unit)	Pleated, MERV 11, and Carbon
H		Pleated, MERV 13, and Carbon
J		Pleated, MERV 14, and Carbon
K		Pleated, MERV 11, and Pleated, MERV 13
L		Pleated, MERV 11, and Pleated, MERV 14

Table 27: 14–18 ton (D Cabinet) Mixing Box Filters

Feature 6A	Quantity/Size	Type
A	(4) 18" x 24" x 2" (located in the mixing box)	2" Pleated, MERV 8 Pre-Filters
Feature 6B	**Quantity/Size**	**Type**
G	(4) 18" x 24" x 4" (located in the mixing box), and (4) 18" x 24" x 4" (located in the unit)	Pleated, MERV 11, and Carbon
H		Pleated, MERV 13, and Carbon
J		Pleated, MERV 14, and Carbon
K		Pleated, MERV 11, and Pleated, MERV 13
L		Pleated, MERV 11, and Pleated, MERV 14

Table 28: Filter Conversation Table

Inches	Centimeters
[16 x 20 x 2]	[40.6 x 50.8 x 5.1]
[16 x 20 x 4]	[40.6 x 50.8 x 10.2]
[18 x 24 x 2]	[45.7 x 61 x 5.1]
[18 x 24 x 4]	[45.7 x 61 x 10.2]
[20 x 24 x 2]	[50.8 x 61 x 5.1]
[20 x 24 x 4]	[50.8 x 61 x 10.2]

9.9. Replacement Parts

Parts for AAON equipment may be obtained from your local AAON representative. Reference the unit serial number and part number when ordering parts.

AAON Warranty, Service, and Parts Department
2424 S. Yukon Ave.
Tulsa, OK 74107
Ph: 918-382-6450
Fax: 918-382-6364
www.aaon.com

Note: Before calling, the technician should have the model and serial number of the unit available for the service department to help answer questions regarding the unit.

Warranty: Refer to the Limited Warranty Certificate for the unit warranty details. Contact your AAON representative for a unit-specific copy of the certificate for your serial number

9.10. Decommissioning

Before decommissioning the unit, ensure you are familiar with the unit and its operation. Only individuals qualified to handle refrigerant may remove the charge from the unit. The unit must be isolated electrically before beginning any decommissioning work. Proper PPE is required.

Ensure any equipment that may be needed for handling refrigerant cylinders safely is available. Equipment and cylinders used for recovery must be in good working order and comply with appropriate standards.

Operate the recovery machine in accordance with the instructions. Remove refrigerant from all parts of the refrigeration system. On heat pumps, refrigerant must be recovered from discharge, suction, and common liquid lines.

Weigh out refrigerant when removing to ensure that all refrigerant is removed and cylinders are not overfilled. Place the refrigerant cylinder on the scales before beginning the recovery process. Do not exceed the maximum pressure of the cylinder.

When recovery is completed, remove all cylinders containing recovered refrigerant from the site. Ensure all isolation valves on equipment are closed and all warning decals are still visible on the unit.

Label the unit as having been decommissioned, and date and sign the label.

This Page Intentionally Left Blank

10. WARRANTY

Refer to the Limited Warranty certificate for the unit's warranty details. Contact an AAON representative for a unit-specific copy of the certificate for the unit's serial number.

Limited Warranty Certificate

GENERAL CONDITIONS
AAON, Inc. (hereinafter referred to as "AAON") warrants this AAON equipment, as identified hereon, to be free of defects in material and workmanship under normal use, service, and maintenance. Our obligations under this warranty must be limited to repairing or replacing the defective part, or parts, which in our judgment show evidence of such defects. AAON is not liable for labor charges and other costs incurred for removing, shipping, handling or transporting defective part, or parts, or for shipping, handling, transporting, or installing repaired or replacement part, or parts.

The limited warranty is effective one (1) year from date of **original installation**, or eighteen (18) months from date of original shipment from the factory, whichever occurs first and covers all parts and components in this AAON equipment excluding air filters, belts, refrigerant moisture driers, and lost refrigerant, which are not included in any part of this limited warranty. The replacement part, or parts, assume only the unused portion of the original limited warranty and are shipped f.o.b. from the factory and freight prepaid by the factory.

The limited warranty is effective for products manufactured at the Tulsa, Oklahoma or Longview, Texas facility.

THIS LIMITED WARRANTY ONLY APPLIES WHEN THE **ORIGINAL MODEL NUMBER AND SERIAL NUMBER** OF THE AAON UNIT ARE GIVEN AT TIME OF REQUEST FOR REPLACEMENT PART, OR PARTS. DEFECTIVE PART, OR PARTS, MUST BE RETURNED **PREPAID**, WITH ITS ASSIGNED RETURN MATERIAL TAG, WITHIN FOURTEEN (14) DAYS OF RECEIPT OF THE REPLACEMENT PART, OR PARTS.

EXTENDED LIMITED WARRANTY ON COMPRESSORS INCLUDED IN SINGLE PACKAGE EQUIPMENT (NOT INCLUDING CHILLERS OR WH/WV); OPTIONAL ON OTHER EQUIPMENT
For the second through the fifth year from date of **shipment**, we further agree to repair or replace the fully hermetic compressor, at our option, for the **original purchase-user only**. The repaired or replacement fully hermetic compressor will be supplied f.o.b. the factory, freight **prepaid and add**, providing the defective fully hermetic compressor is returned **prepaid by the customer**, and is proven to be inoperative due to defects in materials or workmanship. This extended limited warranty covers **only** the fully hermetic compressor and **does not include** any labor charges, or other additional costs incurred for removing, shipping, handling, transporting, or replacing the defective fully hermetic compressor. It also **does not include** additional costs incurred for shipping, handling, or transporting of electric controls such as relays, capacitors, pressure controls, or fan-motor assemblies, condensers, receivers, etc. which carry the standard **one-year limited warranty**.

EXTENDED LIMITED WARRANTY OF WH/WV PRODUCTS
The WH/WV limited warranty is effective five (5) years from date of original installation. If installation date cannot be verified, limited warranty is effective five (5) years from date of equipment manufacture at the factory. Warranty covers all parts and components, including compressors, in this AAON equipment except those excluded in the general conditions.

EXTENDED LIMITED WARRANTY OF RQ PRODUCTS
The RQ limited warranty is effective two (2) years from date of original **shipment** from the factory and covers all parts and components in this AAON equipment except those excluded in the general conditions.

FOR OPTIONAL TWO YEAR EXTENDED LIMITED WARRANTY OF RN PRODUCTS
The limited warranty is effective two (2) years from date of original **shipment** from the factory and covers all parts and components in this AAON equipment except those excluded in the general conditions.

FOR OPTIONAL FIVE YEAR EXTENDED LIMITED WARRANTY OF RN or RQ PRODUCTS
The limited warranty is effective five (5) years from date of original **shipment** from the factory and covers all parts and components in this AAON equipment except those excluded in the general conditions.

FOR OPTIONAL TEN YEAR EXTENDED LIMITED WARRANTY OF RN or RQ PRODUCTS
The limited warranty is effective ten (10) years from date of original **shipment** from the factory and covers all parts and components in this AAON equipment except those excluded in the general conditions.

FOR OPTIONAL FIVE YEAR EXTENDED LIMITED WARRANTY OF RN OR RQ ECONOMIZER WITH FAULT DETECTION AND DIAGNOSTICS
For the second through fifth year from date of shipment, we further warrant the economizer damper assembly against failure due to defects in materials and workmanship for the original purchaser-user only.

EXTENDED LIMITED WARRANTY OF GAS FIRED HEAT EXCHANGERS

FOR RQ OR RN ALUMINIZED STEEL HEAT EXCHANGERS
For the second through the fifteenth year from date of **shipment**, we further warrant the steel heat exchanger against failure due to defects in materials and workmanship for the **original purchaser-user only**.

FOR RQ, RN, OR RZ STAINLESS STEEL HEAT EXCHANGERS
For the second through the twenty-fifth year from date of **shipment**, we further warrant the stainless steel heat exchanger against failure due to defects in materials and workmanship for the **original purchaser-user only**.

FOR RL SERIES HEAT EXHANGERS
For the second through the tenth year from date of original installation, we further warrant the steel heat exchanger against failure due to defects in materials and workmanship for the original purchaser-user only, in accordance with the following: For the first five (5) years from date of shipment, we agree to repair or replace the heat exchanger, at our option, for the original purchaser-user only; during the sixth year, we will charge 50% of the current trade price for repaired or replacement steel heat exchanger, as the case may be, during the seventh year, 60%, during the eighth year, 70% during the ninth year, 80% and during the tenth year, 90%.

In all cases, the repaired or replacement heat exchanger will be supplied f.o.b. our factory, freight prepaid, providing the defective heat exchanger is returned **prepaid**, and if it is proved to be inoperative due to defects in materials and workmanship. This extended limited warranty covers **only** the heat exchanger and **does not include** labor charges, or other costs incurred for removing, shipping, handling, transporting, or installing repaired replacement heat exchanger. This extend limited warranty **does not apply** where the furnace has been operated in an atmosphere contaminated by chlorine, fluorine, or any other damaging chemical compounds.

FOR OPTIONAL FIVE YEAR EXTENDED LIMITED WARRANTY OF COIL COATING
For the second through fifth year from date of shipment, we further warrant the coating of e-coated coils on the equipment against failure due to defects in materials and workmanship for the original purchaser-user only. Coil cleaning, maintenance, and record keeping must be followed according to the unit Installation, Operation and Maintenance Manual to maintain warranty.

1 of 2

Limited Warranty Certificate

OTHER CONDITIONS
This warranty **does not cover** any AAON unit or part thereof which has been subject to accident, negligence, damages in transit, misuse or abuse, **or which has been tampered with or altered in any way**, or which has **not** been installed operated serviced and maintained in accordance with our instructions, or which has been installed outside of the Continental United States or Canada, or on which the serial number or identification number has been altered defaced, or removed. AAON will not be responsible for failure of the unit to start due to voltage conditions, blown fuses, open circuit breakers, or other damages due to the inadequacy or interruption of electric service.

This warranty **does not cover** equipment containing a water-to-refrigerant heat exchanger for any damage resulting from freezing, fouling, corrosion or clogging.

AAON must not be liable for any default or delay in performance hereunder, caused by a contingency beyond its control, including governmental restrictions or restraint, strikes, short or reduced supply of raw materials or parts, floods, winds, fire, lightning strikes, or any other acts of God.

DISCLAIMERS OF WARRANTIES

THIS WARRANTY IS EXCLUSIVE AND IS IN LIEU OF ANY WARRANTY OF MERCHANTABILITY, FITNESS FOR A PARTICULAR PURPOSE OR OTHER WARRANTY OF QUALITY, WHETHER EXPRESS OR IMPLIED, EXCEPT OF TITLE AND AGAINST PATENT INFRINGEMENT. CORRECTION OF NON-CONFORMITIES ARE LIMITED TO REPAIR OR REPLACEMENT OF THE DEFECTIVE PART OR PARTS, AT SELLER'S OPTION, WHICH MUST CONSTITUTE FULFILLMENT OF ALL TORT OR OTHERWISE IT IS EXPRESSLY UNDERSTOOD THAT AAON MUST NOT BE LIABLE FOR ANY CONSEQUENTIAL OR INCIDENTAL DAMAGES. AAON MUST NOT UNDER ANY CIRCUMSTANCES BE LIABLE FOR SPECIAL, INCIDENTAL OR CONSEQUENTIAL DAMAGES, SUCH AS, BUT NOT LIMITED TO DAMAGES OR LOSS OF OTHER PROPERTY OR EQUIPMENT, LOSS OF PROFITS OR REVENUE, COST OF CAPITAL, COST OF PURCHASED OR REPLACEMENT GOODS, OR CLAIMS OF BUYER OR USER FOR SERVICE INTERRUPTIONS. THE REMEDIES OF THE BUYER SET FORTH HEREIN ARE EXCLUSIVE, AND THE LIABILITY OF AAON WITH RESPECT TO ANY CONTRACT, OR ANYTHING DONE IN CONNECTION THEREWITH SUCH AS THE PERFORMANCE OR BREACH THEREFORE, OR FROM THE MANUFACTURE, SALE, DELIVERY, RESALE, INSTALLATION, OR USE OF ANY GOODS COVERED BY OR FURNISHED UNDER THIS CONTRACT WHETHER ARISING OUT OF CONTRACT, NEGLIGENCE, STRICT TORT, OR UNDER ANY WARRANTY, OR OTHERWISE, MUST NOT EXCEPT AS EXPRESSLY PROVIDED HEREIN, EXCEED THE PRICE OF THE GOODS UPON WHICH SUCH LIABILITY IS BASED.

WITH RESPECT TO THE GOODS SOLD, THE BUYER HEREBY WAIVES ALL LIABILITY ARISING FROM STATUTE, LAW, STRICT LIABILITY IN TORT, OR OTHERWISE, INCLUDING WITHOUT LIMITATION ANY OBLIGATION OF AAON WITH RESPECT TO CONSEQUENTIAL OR INCIDENTAL DAMAGES AND WHETHER OR NOT OCCASIONED BY AAON NEGLIGENCE. TIME LIMIT ON COMMENCING LEGAL ACTIONS: AN ACTION FOR BREACH OF THIS CONTRACT FOR GOOD SOLD OR ANY OTHER ACTION OTHERWISE ARISING OUT OF THIS CONTRACT, MUST BE COMMENCED WITHIN ONE (1) YEAR FROM THE DATE, THE RIGHT, CLAIM, DEMAND OR CAUSE OF ACTION MUST FIRST OCCUR, OR BE BARRED FOREVER.

SEVERABILITY

IF ANY PROVISION OR CAUSE OF THIS CONTRACT OR APPLICATION THEREOF TO ANY PERSON OR CIRCUMSTANCES IS HELD INVALID OR UNCONSCIONABLE SUCH INVALIDITY OR UNCONSCIONABILITY MUST NOT AFFECT OTHER PROVISIONS OR APPLICATIONS OF THE CONTRACT WHICH CAN BE GIVEN EFFECT WITHOUT THE INVALID OR UNCONSCIONABLE PROVISIONS OF THE CONTRACT ARE DECLARED BE SEVERABLE.

EQUIPMENT INFORMATION (REQUIRED)

Job Name: Click or tap here to
Sales Order Number: Click or tap here to enter text.
Unit Tag: Click or tap here to enter text
Date of Shipment: Click or tap here to enter text.
Serial Number: Click or tap here to enter text.
Unit Model Number: Click or tap here to enter text.

2 of 2

11. SB SERIES STARTUP FORMS

Job Name: _____ Date: _____

Installed Address:

_____

_____

Model Number: _____

Serial Number: _____ Tag: _____

Startup Contractor: _____

Address: _____

_____ Phone: _____

11.1. Pre-Startup Checklist

1. Is there any visible shipping damage?	☐ Yes
2. Is the unit level?	☐ Yes
3. Are the unit clearances adequate for service and operation?	☐ Yes
4. Do all access doors open freely, and are the handles operational?	☐ Yes
5. Have all shipping braces been removed?	☐ Yes
6. Have all electrical connections been tested for tightness?	☐ Yes
7. Has all gas heat piping been checked for leaks?	☐ Yes
8. Does the electrical service correspond to the unit nameplate?	☐ Yes
9. On 208/230V units, has transformer tap been checked?	☐ Yes
10. Has overcurrent protection been installed to match the unit nameplate requirement?	☐ Yes
11. Have all set screws on the fans been tightened?	☐ Yes
12. Do all fans rotate freely?	☐ Yes
13. Does the field water piping to the unit appear to be correct per design parameters?	☐ Yes
14. Is all copper tubing isolated so that it does not rub?	☐ Yes
15. Have the damper assemblies been inspected?	☐ Yes
16. Are air filters installed with proper orientation?	☐ Yes
17. Have condensate drain and p-trap been connected?	☐ Yes
18. Is the actual refrigerant charge of the largest circuit in accordance with the required conditioned floor area according to Table 16?	☐ Yes
19. Are ventilation and exhaust openings unobstructed?	☐ Yes
20. Are markings, decals, and warnings on the unit clearly visible?	☐ Yes
21. Are all damaged or illegible markings and warnings replaced?	☐ Yes

11.2. A2L Refrigerant Detection System (RDS) Pre-Start Checklist

1. Does each port (sensor 1–3) have a male connector plugged into both the Cabinet and Airstream connection on the mitigation board?	☐ Yes
2. Does the compressor operation shut off when the cabinet board sensor trips?	☐ Yes
3. Normal unit operation commences except for the compressor after the cabinet board sensor trips?	☐ Yes
4. Does the compressor shut off and the fan stay on when the Airstream board sensor trips?	☐ Yes
5. Non-compressor heating/cooling stay on when both boards trip? (electric heater stays on)	☐ Yes
6. When the A2L airstream alarm is activated, do supply fans start, VAV boxes open, and compressors stop?	☐ Yes

11.3. Ambient Temperature

Ambient Temperature	
Ambient Dry Bulb Temperature _____°C/°F	Ambient Wet Bulb Temperature _____°C/°F

11.4. Voltage

L1	L2	L3

L1-Ground	L2-Ground	L3-Ground

11.5. Supply Fan Assembly

Alignment ☐		Check Rotation ☐		Nameplate Amps _____
Number	**Hp**	**L1 Volts/Amps**	**L2 Volts/Amps**	**L3 Volts/Amps**
1				
2				
Band Size_____		VAV Controls _____		
VFD Frequency _____				

11.6. Compressors/DX Cooling

Number	L1 Volts/Amps	L2 Volts/Amps	L3 Volts/Amps	Head Pressure PSIG	Suction Pressure PSIG
1					

11.7. Refrigeration Systems Cooling Mode

Refrigeration System 1 - Cooling Mode					
	Pressure	Saturated Temperature	Line Temperature	Sub-cooling	Superheat
Discharge				N/A	N/A
Suction				N/A	
Liquid					N/A

11.8. Refrigeration Systems Heating Mode

Refrigeration System 1 - Heating Mode (Heat Pump Only)					
	Pressure	Saturated Temperature	Line Temperature	Sub-cooling	Superheat
Discharge				N/A	N/A
Suction				N/A	
Liquid					N/A

11.9. Unit Configuration

Water-Cooled Condenser ☐
No Water Leaks ☐
Condenser Safety Check ☐
Water Flow _____GPM
Water Inlet Temperature _____°F
Water Outlet Temperature _____°F

11.10. Water/Glycol System

1. Has the entire system been flushed and pressure checked?	☐ Yes
2. Has the entire system been filled with fluid?	☐ Yes
3. Has air been bled from the heat exchangers and piping?	☐ Yes
4. If glycol is used, is it the proper type and concentration (N/A if water)?	☐ Yes
5. Is there a minimum load of 50% of the design load?	☐ Yes
6. Has the water piping been insulated?	☐ Yes
7. What is the freezing point of the glycol (N/A if water)? _____	☐ Yes

11.11. Mixing Box Dampers

Aux. Limit Lockout ☐	Aux. Limit Lockout ☐	Aux. Limit Lockout ☐
Damper Actuator Type:_____		
Economizer Changeover Type and Operations:_____		

11.12. Electric Heating

Stages _____	
Limit Lockout ☐	Aux. Limit Lockout ☐
Stage	Volts/Amps
1	
2	
3	
4	
5	
6	
7	
8	

11.13. Additional Findings

11.14. Signature

By signing this form, you verify that all of the information contained is correct and filled out to the best of your ability.

Name:		
Title:		
Rep/Contractor:		
Signature:_____		**Date/Time**:_____

12. APPENDIX A: UNIT SAFETY HIERARCHY

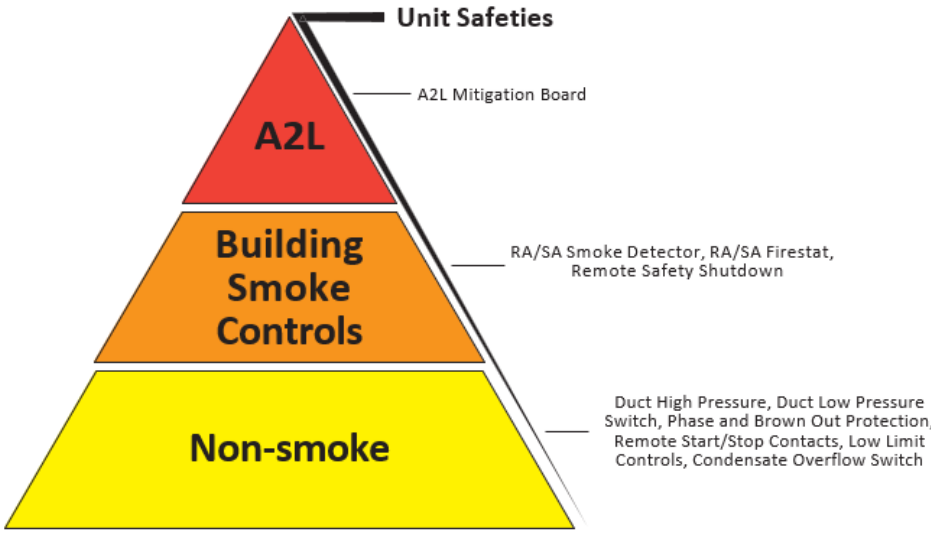

Figure 32: Unit Safety Hierarchy

Default (A2L Priority)

Units will ship with A2L sequences at the highest priority. This may activate the indoor blower in the event of an A2L leak, even if Building Smoke Controls or Non-smoke safeties interrupt the 24V/120V safety circuit. The terminal block labeled 'Hierarchy Control' will control the priority.

The jumper will connect 'Com' and 'A2L' for A2L priority.

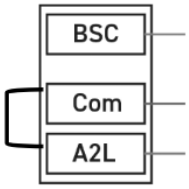

Figure 33: A2L Priority Jumper

Building Smoke Control Priority

Units will have the option to shift the Unit Safety Hierarchy in the field. To shift the priority, turn the power off to the unit and move the jumper to 'Com' and 'BSC' on the 'Hierarchy Control' terminals.

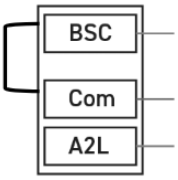

Figure 34: Building Smoke Control Priority Jumper

Example Scenario

If priority is given to Building Smoke Controls, and simultaneously both A2L and any of the Building Smoke Controls goes into alarm, the 24V/120V safety circuit will shut down the unit, and A2L mitigation will not take place.

Locating the "Hierarchy Control" LVTB

Locate the low voltage control section

Identify the 'Hierarchy Control' label by the (3) terminals labeled "BSC", "COM", and "A2L"

13. APPENDIX B: HEAT EXCHANGER CORROSION RESISTANCE

Corrosion Resistance of Copper and Stainless-Steel in Brazed Plate Heat Exchangers - Points to Measure and Check in a Water Analysis

The resistance guide provides the corrosion resistance of stainless-steel type AISI 316 and pure Copper (99.9%) in water, to a number of important chemical factors. The actual corrosion is a very complex process influenced by many different factors in combination.

Explanations:

[+] Good resistance under normal conditions
[0] Corrosion problems may occur, especially when more factors are valued 0
[-] Use is not recommended

Table 37: Corrosion Resistance

Water Containing	Concentration (mg/L or ppm)	Time Limits - Analyze Before	AISI 316	SMO 254	Copper Alloy	Nickel Alloy
Alkalinity (HCO_3^-)	< 70	Within 24 Hours	+	+	0	+
	70–300		+	+	+	+
	> 300		+	+	0/+	+
Sulfate ($SO4^{2-}$)	< 70	No Limit	+	+	+	+
	70–300		+	+	0/-	+
	> 300		0	0	-	+
HCO_3^-/ $SO4^{2-}$	> 1.0	No Limit	+	+	+	+
	< 1.0		+	+	0/-	+
Electrical Conductivity	< 10µS/cm	No Limit	+	+	0	+
	10–500 µS/cm		+	+	+	+
	> 500 µS/cm		+	+	0	+
pH	< 6.0	Within 24 Hours	0	0	0	+
	6.0–7.5		0/+	+	0	+
	7.5–9.0		+	+	+	+
	> 9.0		+	+	0	+
Ammonium (NH_4^+)	< 2	Within 24 Hours	+	+	+	+
	2–20		+	+	0	+
	> 20		+	+	-	+
Chlorides (Cl^-)*	< 300	No Limit	+	+	+	+
	> 300		0	+	0/+	+
Free Chlorine (Cl_2)	< 1	Within 5 Hours	+	+	+	+
	1–5		+	+	0	+
	> 5		0/+	+	0/-	+

Note: See Chlorine Content Table

Table 38: Corrosion Resistance Continued

Water Containing	Concentration (mg/L or ppm)	Time Limits - Analyze Before	AISI 316	SMO 254	Copper Alloy	Nickel Alloy
Hydrogen Sulfide (H_2S)	< 0.05	No Limit	+	+	+	+
	> 0.05		+	+	0/-	+
Free (aggressive) Carbon Dioxide (CO_2)	< 5	No Limit	+	+	+	+
	5–20		+	+	0	+
	> 20		+	+	-	+
Total Hardness (°dH)	4.0–8.5	No Limit	+	+	+	+
Nitrate (NO_3)	< 100	No Limit	+	+	+	+
	> 100		+	+	0	+
Iron (Fe)	< 0.2	No Limit	+	+	+	+
	> 0.2		+	+	0	+
Aluminum (Al)	< 0.2	No Limit	+	+	+	+
	> 0.2		+	+	0	+
Manganese (Mn)	< 0.1	No Limit	+	+	+	+
	> 0.1		+	+	0	+

Table 39: Chloride Content

Chloride Content	Maximum Temperature			
	60°C (140°F)	80°C (176°F)	120°C (248°F)	130°C (266°F)
= 10 ppm	SS 304	SS 304	SS 304	SS 316
= 25 ppm	SS 304	SS 304	SS 316	SS 316
= 50 ppm	SS 304	SS 316	SS 316	Ti/SMO 254
= 80 ppm	SS 316	SS 316	SS 316	Ti/SMO 254
= 150 ppm	SS 316	SS 316	Ti/SMO 254	Ti/SMO 254
= 300 ppm	SS 316	Ti/SMO 254	Ti/SMO 254	Ti/SMO 254
> 300 ppm	Ti/SMO 254	Ti/SMO 254	Ti/SMO 254	Ti/SMO 254

14. APPENDIX C: MAINTENANCE LOGS

This log must be kept with the unit. It is the responsibility of the owner and/or maintenance/service contractor to document any service, repair, or adjustments. AAON Service and Warranty Departments are available to advise and provide phone help for proper operation and replacement parts. The responsibility for proper start-up, maintenance, and servicing of the equipment falls to the owner and a qualified licensed technician.

Entry Date	Action Taken	Name/Tel.

15. APPENDIX D: MAINTENANCE LOG (E-COATED COIL)

Installation Site: _____ Installation Date: _____

Unit Model #: _____ Unit Location: _____

Unit Serial #: _____ Customer: _____

Year 20__	Ambient Temp (°F)	Surface Debris Removed	Coil Cleaned	Approved Cleaner Used	Potable Water Backwash Rinse	Potable Water Frontwash Rinse	Chlorides Removed	Comments
JAN		☐	☐	☐	☐	☐	☐	
FEB		☐	☐	☐	☐	☐	☐	
MAR		☐	☐	☐	☐	☐	☐	
APR		☐	☐	☐	☐	☐	☐	
MAY		☐	☐	☐	☐	☐	☐	
JUN		☐	☐	☐	☐	☐	☐	
JUL		☐	☐	☐	☐	☐	☐	
AUG		☐	☐	☐	☐	☐	☐	
SEP		☐	☐	☐	☐	☐	☐	
OCT		☐	☐	☐	☐	☐	☐	
NOV		☐	☐	☐	☐	☐	☐	
DEC		☐	☐	☐	☐	☐	☐	

The following cleaners have been approved for use on AAON E-Coated Coils to remove mold, mildew, dust, soot, greasy residue, lint, and similar particulates without harming the coated surfaces.

Cleaning Agent	Reseller	Part Number
GulfClean ™ Coil Cleaner Or Enviro-Coil Cleaner	RectorSeal 2601 Spenwick Drive, Houston, Texas 77055 (P): 713-263-8001	G074480 / 80406 Or V82540
GulfClean Salt Reducer ™	" "	G074480 / 80406

Recommended Chloride Remover
RectorSeal 2601 Spenwick Drive, Houston, Texas 77055 (P): 713-263-8001

16. LITERATURE CHANGE HISTORY

October 2022

Added E=No Paint option to Feature 17, while removing 0=No Paint option so the SA Series and SB Series will have consistent feature options. Leaving 0 = No Paint in this document for older units. Added E = 1 Blower + Perm Magnet AC TEFC Motor + VFD option to Feature 5A.

November 2023

Start of new UL 60335 version of SB series IOM Rev. A. Added New UL 60335 tables and standard. Added 35 and 65 KAIC tables. Add Min and Max Water temps and pressures table. Added 454B Pressure Temperature charts as well as metric and imperial versions of 410A and 454B. Add new warning labels. Updated Feature string. Added metric conversions to all units in the IOM.

March 2024

Additional warnings added. Text added to installation section about proper ventilation requirements. Minimum Floor Area for the charge table added. Added "Refrigerant Detection System" for new mitigation board for A2L refrigerant. Additional checklist items added to Startup form. Sentence added to storage section with regard to ASHRAE 15 requirements. Added section about proper Refrigerant removal and Evacuation.

May 2024

Added a statement to the general item numbered list about ducted applications in a space.

July 2024

Added statement about UV lights and lamp replacement.

August 2024

Added process of decommissioning the unit. Added text to General Information stating the maximum installation elevation is 11,500 ft.

September 2024

Added detailed text to the RDS mitigation board section for the sequence of operations for the A2L sensors.

October 2024

Updated part number. Added text in the supply fan section about adjusting the set screw and a figure of what the gap of the plenum looks like.

January 2025

Updated decommissioning section. Updated RDS section, updated startup form. Updated the warnings and caution section.

November 2025

Updated and edited the document formatting.

September 2026

Updated Revision to “D”. Added “Install this appliance in accordance with local codes…” paragraph to Safety Section. Corrected Warning Box outline. Updated start-up form information block from “address” to “Installed Address”. Corrected “-“ vs. “–“ throughout.

AAON

203 Gum Springs Rd.

Longview, TX 75602-1721

www.AAON.com

SB Series

Installation, Operation, & Maintenance

G164880 · Rev. D · 20260915

AAON® is a subsidiary of The Aaon Group. It is the intent of The Aaon Group to provide accurate and current product information. However, in the interest of product improvement, The Aaon Group reserves the right to change pricing, specifications, and/or design of its product without notice, obligation, or liability.

Copyright © AAON®, all rights reserved throughout the world.

AAON® and AAONAIRE® are registered trademarks of The Aaon Group, Tulsa, OK.