Installation, Operation, and Maintenance Manual

2026

SA Series (23-70 Tons)

Vertical Self-Contained Units and Indoor Air Handling Units

The information in this document is subject to change. Printed versions may not reflect the most current updates. Please ensure that you have the most recent version prior to referencing any information within the document. Visit www.aaon.com to confirm your version is up to date, or to download the most recent version.

R-454B

Conforms to UL STDs 60335-1 and 60335-2-40

Rev D Version 20260915

This Page Intentionally Left Blank

TABLE OF CONTENTS

1. SAFETY 1
2. NOTES, CAUTIONS, AND WARNINGS 2
3. SA SERIES FEATURE STRING NOMENCLATURE 7
3.1. SA Series Feature String Description 7
4. GENERAL INFORMATION 15
4.1. Codes and Ordinances 15
4.2. Receiving Unit 16
4.3. Storage 16
4.4. Direct Expansion (DX Systems) 17
4.5. Wiring Diagrams 17
4.6. Condensate Drain Pans 18
4.7. Unit Size 18
5. INSTALLATION 19
5.1. Locating the Unit 19
5.2. Lifting and Handling the Unit 19
5.3. Split Unit Assembly 26
5.4. Split Unit Assembly 29
5.5. Electrical 34
5.6. Duct Connection 37
5.7. Condensate Drain Piping 38
5.8. Waterside Economizer 39
5.9. Hot Water Coil 43
5.10. Chilled Water Coil 43
6. STARTUP 45
6.2. Supply Fans 45
6.3. Fan Set Screw Adjustment 45
6.4. Adjusting Refrigerant Charge 50
7. OPERATION 57
7.1. Refrigerant Detection System 57
7.2. Steam or Hot Water Preheating Operation 58
7.3. Chilled Water or Non-Compressorized DX Cooling Operation 58
7.4. Packaged DX Cooling Operation and Control 58
8. MAINTENANCE 59
8.1. DX Cooling 59
8.2. Condensate Drain Pans 60

8.3. E-Coated Coil Cleaning 60
8.4. Supply Fans 63
8.5. Phase and Brownout Protection Module 64
8.6. Filter Replacement 64
8.7. Replacement Parts 66
8.8. UV Lights 66
8.9. Decommissioning 66
9. WARRANTY 67
10. SA SERIES START-UP FORMS 68
10.1. Pre-Startup Checklist 68
10.2. A2L Refrigerant Detection System (RDS) Pre-Start Checklist 69
10.3. Ambient Temperature 69
10.4. Supply Fan Assembly 69
10.5. Compressors/DX Cooling 69
10.6. Refrigeration Systems Cooling Mode 70
10.7. Refrigeration Systems Heating Mode 71
10.8. Unit Configuration 72
10.9. Water/Glycol System 72
10.10. Air-Cooled Condenser Fans 72
10.11. Additional Findings 73
10.12. Signature 73
11. APPENDIX A: UNIT SAFETY HIERARCHY 74
12. APPENDIX B: HEAT EXCHANGER CORROSION RESISTANCE 75
13. APPENDIX C: MAINTENANCE LOGS 77
14. APPENDIX D: MAINTENANCE LOG (E-COATED COIL) 78
15. LITERATURE CHANGE HISTORY 79

TABLE OF FIGURES

Figure 1: SA Series Unit with Right Intake 19
Figure 2: One Piece Single Unit Lifting Details 20
Figure 3: Two Piece Single Unit Coil Section Lifting Details 21
Figure 4: Two Piece Single Unit Fan Section Lifting Details 22
Figure 5: One Piece Dual Unit Lifting Details 23
Figure 6: Two Piece Dual Unit Coil Section Lifting Details 24
Figure 7: Two Piece Dual Unit Fan Section Lifting Details 25
Figure 8: Dual Unit Without Splices and Before Being Bolted Together 27
Figure 9: Dual Unit Assembly Details 27
Figure 10: Dual Unit with Splices After Being Bolted Together 28
Figure 11: Drain Trap 38
Figure 12: SA Series Unit with Waterside Economizer Piping 40
Figure 13: Air Conditioner Waterside Economizer Piping Kit 41
Figure 14: Air Conditioner Waterside Economizer Back View 41
Figure 15: Water-Source Heat Pump Waterside Economizer Piping Kit 42
Figure 16: Water-Source Heat Pump Waterside Economizer Back View 42
Figure 17: Plenum Fan Gap Tolerances 46
Figure 18: Spring Location 47
Figure 19: Back View with Supply Fan Access Pan Removed 48
Figure 20: Front View with Supply Fan Access Door Open 48
Figure 21: Blower Wheel with Band 49
Figure 22: Securing the Band 49
Figure 23: Band Tabs 50
Figure 24: Blower Wheel 50
Figure 25: Phase and Brownout Protection Module 64
Figure 26: Unit Safety Hierarchy 74
Figure 27: A2L Priority Jumper 74
Figure 28: Building Smoke Control Priority Jumper 74

TABLE OF TABLES

Table 1: SA Series Models 18
Table 2: Glycol Freezing Points (Metric) 30
Table 3: Glycol Freezing Points (Imperial) 30
Table 4: Condenser Water Connections 31
Table 5: Condenser Pressure Drops (Each Heat Exchanger) 32
Table 6: Nameplate Voltage Markings & Tolerances 34
Table 7: Control Wiring 36
Table 8: 35 KAIC Fuse Sizing 37
Table 9: 65 KAIC Fuse Sizing 37
Table 10: Duct Connection Size (Metric) 37
Table 11: Duct Connection Size (Imperial) 37
Table 12: Drain Trap Dimensions (Metric) 39
Table 13: Drain Trap Dimensions (Imperial) 39
Table 14: Min and Max Water Pressure and Temps 43
Table 15: Plenum Fan Set Screw Specifications 45
Table 16: Acceptable Fin & Tube Air-Cooled Condenser Coil Refrigeration Circuit Values (Metric) 51
Table 17: Acceptable Fin & Tube Air-Cooled Condenser Coil Refrigeration Circuit Values (Imperial) 51
Table 18: Acceptable Water-Cooled Refrigeration Circuit Values (Metric) 51
Table 19: Acceptable Water-Cooled Refrigeration Circuit Values (Imperial) 51
Table 20: Acceptable Microchannel Air-Cooled Condenser Coil Liquid Sub-Cooling Values (Metric) 52
Table 21: Acceptable Microchannel Air-Cooled Condenser Coil Liquid Sub-Cooling Values (Imperial) 52
Table 22: Minimum Room Area for Charging a Unit 53
Table 23: R-454B Refrigerant Temperature-Pressure Chart (Metric) 54
Table 24: R-454B Refrigerant Temperature-Pressure Chart (Imperial) 55
Table 25: 23-25 tons, Pre Filters 65
Table 26: 45-70 tons, Pre Filters 65
Table 27: 23-25 tons, Unit Filters 65
Table 28: 45–70 tons, Unit Filters 65
Table 29: Corrosion Resistance 75
Table 30: Corrosion Resistance Continued 76
Table 31: Chloride Content 76

1. SAFETY

Attention must be paid to the following statements:

Startup and service must be performed by a Factory-Trained Service Technician competent in working with flammable refrigerants.

Every unit has a unique equipment nameplate with electrical, operational, and unit clearance specifications. Refer to the unit nameplate for specific ratings unique to the model purchased.

Note: Read the entire installation, operation, and maintenance manual. Other important safety precautions are provided throughout this manual.

Install this appliance in accordance with local codes. In the absence of local codes, install in accordance with ASHRAE 15, ASHRAE 15.2, IAPMO Uniform Mechanical Code, ICC International Mechanical Code, or CSA B52.

Keep this manual and all literature safeguarded near or on the unit.

This product is designed for the use of R-454B refrigerant only. The use of any other refrigerant in this product is not covered under ETL listing and will void the warranty.

2. NOTES, CAUTIONS, AND WARNINGS

Attention Must be paid to the following statements

Note: Notes are intended to clarify the unit installation, operation, and maintenance.

CAUTION

Caution statements are given to prevent actions that may result in equipment damage, property damage, or personal injury.

WARNING

Warning statements are given to prevent actions that could result in equipment damage, property damage, or serious personal injury.

DANGER

Danger statements are given to prevent actions that will result in equipment destruction, property damage, and severe personal injury or death.

WARNING

Electric Shock, Fire, or Explosion Hazard:
Failure to follow safety warnings could result in dangerous operation, serious injury, death, or property damage.

Improper servicing could result in dangerous operation, serious injury, death, or property damage.

- Before servicing, disconnect all electrical power to the furnace. More than one disconnect may be provided.
- When servicing controls, label all wires prior to disconnecting. Reconnect wires correctly after servicing.
- Verify proper operation after servicing. Secure all doors with a key-lock or a nut and bolt.

WARNING

Electric shock hazard. Before servicing, shut off all electrical power to the unit, including remote disconnects, to avoid shock hazard or injury from rotating parts. Follow proper Lockout-Tagout procedures.

WARNING

Fire, Explosion, or Carbon Monoxide Poisoning Hazard:
Failure to replace proper controls could result in fire, explosion, or carbon monoxide poisoning. Failure to follow safety warnings exactly could result in serious injury, death, or property damage. Do not store or use gasoline or other flammable vapors and liquids in the vicinity of this appliance.

WARNING

During installation, testing, servicing, and troubleshooting of the equipment, it may be necessary to work with live electrical components. Only a qualified licensed electrician or an individual properly trained in handling live electrical components shall perform these tasks.

Standard NFPA-70E, an OSHA regulation requiring an Arc Flash Boundary to be field established and marked for identification of where appropriate Personal Protective Equipment (PPE) be worn, should be followed.

CAUTION

Electric motor over-current protection and overload protection may be a function of the Variable Frequency Drive to which the motors are wired. Never defeat the VFD motor overload feature. The overload ampere setting must not exceed 115% of the electric motors FLA rating as shown on the motor nameplate.

WARNING

Grounding Required:
All field installed wiring must be completed by qualified personnel. Field installed wiring must comply with NEC/CEC, local and state electrical code requirements. Failure to follow code requirements could result in serious injury or death. Provide proper unit ground in accordance with these code requirements.

WARNING

Variable Frequency Drives:
Do not leave VFDs unattended in hand mode or manual bypass. Damage to personnel or equipment can occur if left unattended. When in hand mode or manual bypass mode VFDs will not respond to controls or alarms.

WARNING

Unit Handling:
To prevent injury or death lifting equipment capacity shall exceed the unit weight by an adequate safety factor. Always test-lift the unit not more than 61 centimeters (24 inches) high to verify the proper center of gravity lift point to avoid unit damage, injury, or death.

CAUTION

Rotation must be checked on all motors and compressors of three-phase units at startup by a qualified service technician. Scroll compressors are directional and can be damaged if rotated in the wrong direction. Compressor rotation must be checked using suction and discharge gauges. Fan motor rotation should be checked for proper operation. Alterations should only be made at the unit power connection.

WARNING

Always use a pressure regulator, valves, and gauges to control incoming pressures when pressure testing a system. Excessive pressure may cause line ruptures, equipment damage, or an explosion, which may result in injury or death.

WARNING

Water Pressure:
Prior to connection of the condensing water supply, verify that the water pressure is less than the maximum pressure shown on the unit nameplate. To prevent injury or death due to the instantaneous release of high-pressure water, relief valves should be field supplied on the system water piping.

CAUTION

Do not clean DX refrigerant coils with hot water or steam. The use of hot water or steam on refrigerant coils will cause high pressure inside the coil tubing and damage to the coil.

WARNING

Do not use oxygen, acetylene, or air in place of refrigerant and dry nitrogen for leak testing. A violent explosion may result causing injury or death.

CAUTION

To prevent damage to the unit, do not use acidic chemical coil cleaners. Do not use alkaline chemical coil cleaners with a pH value greater than 8.5, after mixing, without first using an aluminum corrosion inhibitor in the cleaning solution.

WARNING

Some chemical coil cleaning compounds are caustic or toxic. Use these substances only in accordance with the manufacturer's usage instructions. Failure to follow instructions may result in equipment damage, injury, or death.

WARNING

Open Loop Applications:
Failure of the condenser as a result of chemical corrosion is excluded from coverage under AAON Inc. warranties and the heat exchanger manufacturer's warranties.

CAUTION

Door compartments containing hazardous voltage or rotating parts are equipped with door latches to allow locks. Door latches are shipped with nuts and bolts requiring tooled access. If you do not replace the shipping hardware with a padlock, always reinstall the nut & bolt after closing the door.

CAUTION

PVC (Polyvinyl Chloride) and CPVC (Chlorinated Polyvinyl Chloride) are vulnerable to attack by certain chemicals. Polyolester (POE) oils used with R-454B and other refrigerants, even in trace amounts, in a PVC or CPVC piping system will result in stress cracking of the piping and fittings and complete piping system failure.

WARNING

Never attempt to open an access door or remove a panel while the unit is running. Pressure in the unit can cause excessive force against the panel.

WARNING

Do not weld or cut the foam panel with plasma cutters or a cutting torch - When burnt, the foam produces dangerous fumes.

WARNING

Ensure that sufficient dampers will be open to provide an air path before the fan is allowed to run.

WARNING

Units with VFD driven motors/compressors have adjustable overload settings. These are set by the AAON factory for the protection of these motors/compressors and must not be adjusted over this factory setpoint or bypassed.

WARNING

This appliance is not intended for use by persons with reduced physical, sensory, or mental capabilities, or a lack of experience and knowledge, unless they have been given supervision or instruction concerning use of the appliance by a person responsible for their safety. Children must be supervised around this appliance.

CAUTION

The unit power supply wire must be only copper or aluminum.

WARNING

Compressor Cycling:

3 Minute Minimum Off Time - To prevent the motor from overheating, compressors must cycle off for a minimum of 3 minutes.

5 Minute Minimum on Time - To maintain the proper oil level, compressors must cycle on for a minimum of 5 minutes.

The cycle rate must not exceed 7 starts per hour.

WARNING

Connected ductwork must be free of potential ignition sources, such as hot surfaces above 700 °C (1292 °F) or electrical devices prone to arcing or sparking. Potential ignition sources within the ductwork may only be allowed if the minimum air velocity across these components is above 1 m/s (200 ft/min) during any point which the component can function.

3. SA SERIES FEATURE STRING NOMENCLATURE

The following is an example of the SA Series Feature String

SA-035-3-A-LR0C-000:AC0E-000-EBF-AB0-0000005-JA-00E000A0B

3.1. SA Series Feature String Description

3.1.1. SA Model Options Breakdown

GEN	SIZE	VLT	CONFIG	
SA -	**035** -	**3** -	**A** -	LR0C-000:AC0E-000-EBF-AB0-0000005-JA-00E000A0B

Series and Generation

SA

Unit Size

023 = 23-ton Capacity
028 = 28-ton Capacity
030 = 30-ton Capacity
035 = 35-ton Capacity
045 = 45-ton Capacity
050 = 50-ton Capacity
055 = 55-ton Capacity
058 = 58-ton Capacity
060 = 60-ton Capacity
065 = 65-ton Capacity
070 = 70-ton Capacity

Voltage

2 = 230V/3Φ/60Hz
3 = 460V/3Φ/60Hz
4 = 575V/3Φ/60Hz
8 = 208V/3Φ/60Hz

Intake Configuration/Interior Protection

A = Left Intake
B = Right Intake
C = Combination - Left and Right Intake

3.1.2. SA Model Options Breakdown

		A1	A2	A3	A4		
SA-035-3-A	-	**L**	**R**	**0**	**C**	-	000:AC0E-000-EBF-AB0-0000005-JA-00E000A0B

A1: Refrigerant Style

0 = Air Handling Unit
F = R-454B Non-Compressorized DX AHU
J = R-454B Scroll Two-Step Compressor
L = R-454B Variable Capacity Compressor (VCC)

A2: Unit Configuration

0 = No Cooling
2 = Non-Compressorized + Std Evap. Coil
4 = Non-Compressorized + 6 Row Evap. Coil
8 = Water-Source/Geothermal Heat Pump - Brazed Plate Heat Exchanger
R = Brazed Plate Water-Cooled Cond. + Std Evap. Coil
T = Brazed Plate Water-Cooled Cond. + 6 Row Evap. Coil
U = Chilled Water Coil - 4 Row
W = Chilled Water Coil - 6 Row

A3: Coil Coating

0 = Standard
1 = Polymer E-Coated Cooling Coil
D = Stainless Steel Cooling Coil Casing

A4: Cooling/Heat Pump Staging

0 = No Cooling
2 = 2 Stage
4 = 4 Stage
B = 2 (4) Two-Step Refrig Systems
C = 1 (2) Variable Refrig Systems + 1 (2) Two-Step Refrig Systems
H = Single Serpentine 8 FPI
J = Half Serpentine 10 FPI
K = Single Serpentine 10 FPI
L = Half Serpentine 10 FPI
M = Single Serpentine 12 FPI
N = Half Serpentine 12 FPI

3.1.3. SA Model Options Breakdown

		B1	B2	B3		1A	1B	1C	1D		
SA-035-3-A-LR0C	-	**0**	**0**	**0**	:	**A**	**C**	**0**	**E**	-	000-EBF-AB0-0000005-JA-00E000A0B

B1: Heating Type

0 = No Heating
C = Steam Distributing Standard Coil
D = Steam Distributing Polymer E-Coated Coil
E = Hot Water Standard Coil
F = Hot Water Polymer E-Coated Coil

B2: Heating Designation

0 = No Heating
H = 1 Row Coil
J = 2 Row Coil

B3: Heating Stages

0 = No Heating
H = Single Serpentine 8 fpi
J = Half Serpentine 8 fpi
K = Single Serpentine 10 fpi
L = Half Serpentine 10 fpi
M = Single Serpentine 12 fpi
N = Half Serpentine 12 fpi

1A: Return / Outside Air Section

0 = Standard
A = Waterside Economizer - 4 Row Coil
B = Waterside Economizer - 6 Row Coil

1B: Plenum Height

0 = 33" Plenum Height
A = 37" Plenum Height
B = 41" Plenum Height
C = 45" Plenum Height
D = 49" Plenum Height
E = 53" Plenum Height
F = 57" Plenum Height
G = 37" Plenum Height + Sound Attenuation
H = 41" Plenum Height + Sound Attenuation
J = 45" Plenum Height + Sound Attenuation
K = 49" Plenum Height + Sound Attenuation
L = 53" Plenum Height + Sound Attenuation
M = 57" Plenum Height + Sound Attenuation

1C: Discharge Configuration

0 = Right - Horizontal Discharge
A = Left - Horizontal Discharge
B = Back - Horizontal Discharge
C = Top - Vertical Discharge
D = Options 0 + A
E = Options 0 + B
F = Options 0 + C
G = Options A + B
H = Options A + C
J = Options B + C
K = Options 0 + A + B
L = Options 0 + A + C
M =Options 0 + B + C
N = Options A + B + C
P = Options 0 + A + B + C

1D: Waterside Economizer Circuiting

0 = Standard - None
E = Single Serpentine 12 fpi

3.1.4. SA Model Options Breakdown

		2	3	4		5A	5B	5C		
SA-035-3-A-LR0C-000:AC0E	-	**0**	**0**	**0**	-	**E**	**B**	**F**	-	AB0-0000005-JA-00E000A0B

2: Blank

0 = Standard

3: Blank

0 = Standard

4: Maintenance Options

0 = Standard
A = Blower Aux. Contact - Low Voltage Terminal Block
B = Remote Start/Stop Terminals - Low Voltage Terminal Block
C = Options A + B

5A: Supply Air Blower Configuration

B = 2 Blowers + Premium Efficiency Motors
C = 4 Blowers + Premium Efficiency Motors
D = 2 Blowers + Premium Efficiency Motors + 1 VFD
E = 2 Blowers + Premium Efficiency Motors + 2 VFDs
F = 4 Blowers + Premium Efficiency Motors + 2 VFDs
G = 4 Blowers + Premium Efficiency Motors + 4 VFDs
J = 1 Blower + Premium Efficiency Motor
K = 1 Blower + Premium Efficiency Motor + 1 VFD

5B: Supply Air Blower

A = 18.5" Spring Isolated Direct Drive Backward Curved Plenum
B = 22" Spring Isolated Direct Drive Backward Curved Plenum

5C: Supply Air Blower Motor

C = 1 hp - 1760 rpm
D = 2 hp - 1760 rpm
E = 3 hp - 1760 rpm
F = 5 hp - 1760 rpm
G = 7.5 hp - 1760 rpm
H = 10 hp - 1760 rpm
N = 1 hp - 1170 rpm
P = 2 hp - 1170 rpm
Q = 3 hp - 1170 rpm
R = 5 hp - 1170 rpm
S = 7.5 hp - 1170 rpm

3.1.5. SA Model Options Breakdown

		6A	6B	6C		7	8	9	10	11	12	
SA-035-3-A-LR0C-000:AC0E-000-EBF	-	**A**	**B**	**0**	-	**0**	**0**	**0**	**0**	**0**	**0**	5-JA-00E000A0B

6A: Pre Filter Type

0 = No Pre Filter
A = 2" Pleated - MERV 8

6B: Unit Filter Type

0 = 2" Pleated - MERV 8
A = 4" Pleated - MERV 8
B = 4" Pleated - MERV 11
C = 4" Pleated - MERV 13
D = 4" Pleated - MERV 14

6C: Filter Options

0 = Standard
A = Clogged Filter Switch
B = Magnehelic Gauge
C = Options A + B

7: Refrigeration Control

0 = Standard
B = 20 Second Time Delay Relay - Comp. Staging
C = Freeze Stat - Each Circuit
D = 5 MTDR – Off + 20 STDR - Staging
E = 5 MTDR – Off + Freeze Stat - Each Circuit
F = 20 STDR – Staging + Freeze Stat - Each Circuit
G = 5 MTDR – Off + 20 STDR - Staging + Freeze Stat - Each Circuit

8: Refrigeration Options

0 = Standard
D = Modulating Hot Gas Reheat

9: Refrigeration Accessories

0 = Standard
A = Sight Glass
B = Compressor Isolation Valves
C = Options A + B

10: Power Options

0 = Standard Power Block

11: Safety Options

0 = Standard
H = Remote Safety Shutdown Terminals

12: Controls

0 = Standard
A = Low Limit Controls
B = Phase and Brown Out Protection
C = Options A + B

3.1.6. SA Model Options Breakdown

	13		14A	14B		
SA-035-3-A-LR0C-000:AC0E-000-EBF-AB0-000000	**5**	**-**	**J**	**A**	**-**	00E000A0B

13: Special Controls

0 = Terminal Block for Thermostat Control
D = VAV Unit Controller - VAV Cool + CV Heat
E = Constant Volume Unit Controller - CV Cool + CV Heat
F = Makeup Air Unit Controller - CV Cool + CV Heat
L = Terminal Block for Thermostat Control with Isolation Relays
Z = Constant Volume Heat Pump Unit Controller - CV Cool + CV Heat
1 = Makeup Air Heat Pump Unit Controller - CV Cool + CV Heat
4 = Field Installed DDC Controls by Others
5 = Field Installed DDC Controls by Others with Isolation Relays
6 = Factory Installed DDC Controls Furnished by Others with Isolation Relays

14A: Water-Cooled Condenser

0 = Standard - None
A = Balancing Valves
B = Water Flow Switch
C = Motorized Shut-Off Valve
D = Head Pressure Control
E = Options A + B
F = Options A + C
G = Options A + D
H = Options B + C
J = Options B + D
L = Options A + B + C
M = Options A + B + D

14B: Waterside Economizer Piping

0 = Standard - None
A = Variable Water Flow Application Field Piped Waterside Economizer
B = Constant Water Flow Application Field Piped Waterside Economizer
C = Variable Water Flow Application Factory Piped Waterside Economizer
D = Constant Water Flow Application Factory Piped Waterside Economizer

3.1.7. SA Model Options Breakdown

	15	16	17	18	19	20	21	22	23
SA-035-3-A-LR0C-000:AC0E-000-EBF-AB0-0000005-JA -	**0**	**0**	**E**	**0**	**0**	**0**	**A**	**0**	**B**

15: Glycol Percentage

0 = Standard
C = Field Adjustable Glycol Percentage

16: Interior Cabinet Options

0 = Standard
A = Overflow Switch

17: Exterior Cabinet Options

A = AAON Gray Paint
B = Special Paint
D = AAON Gray Paint + Interior Corrosion Protection
E (default) = No Paint

18: Blank

0 = Standard

19: Code Options

0 = Standard - ETL U.S.A. Listing
D = Chicago - Cool Only
G = Chicago - No Cool + No Heat
H = ETL U.S.A. + Canada Listing

20: Crating

0 = Standard
A = Export Crating
B = Forkliftable Base
C = Shipping Shrink Wrap
D = Options A + B
E = Options A + C

20: Crating (Continued)

F = Options B + C
G = Options A + B + C
H = Shipping Covers
J = Option A +H
K = Option B + H
M = Option A + B +H

21: Shipping Splits

0 = Standard - One Piece Unit
A = Two Piece Single Unit - 1 Blower Plenum + 1 Air Tunnel
B = Two Piece Double Unit - 1 Blower Plenum + 1 Air Tunnel

22: Control Vendors

0 = Standard
V = VCC-X Controls + Integrated BACnet MSTP

23: Type

B = Standard Paint
X = Special Pricing Authorization + AAON Gray Paint

This Page Intentionally Left Blank

4. GENERAL INFORMATION

SA Series self-contained units and indoor air handling units have been designed for indoor installation only. SA Series units can contain spring-isolated direct-drive backward-curved plenum fans, brazed-plate water-cooled condensers, R-454B scroll compressors, evaporator coils, chilled water-cooling coils, steam or hot water heating coils, waterside economizers, and a single-point power connection.

Units are assembled, wired, charged, and run-tested at the factory. SA Series units are not intended for residential use. Startup and service must be performed by a Factory Trained Service Technician. SA Series units are intended for installation up to 3500 meters (11,500 ft).

WARNING

Improper installation, adjustment, alteration, service, or maintenance can cause property damage, personal injury, or loss of life. A copy of this IOM should be kept with the unit.

4.1. Codes and Ordinances

SA Series units have been tested and certified by ETL, in accordance with UL Safety Standard 60335-2-40 4th Edition, ANSI Safety Standard Z21.47-2016.

The system should be sized in accordance with the American Society of Heating, Refrigeration, and Air Conditioning Engineers Handbook.

Installation of units must conform to the ICC standards of the International Mechanical Code, the International Building Code, Installation of Air Conditioning and Ventilating Systems Standard, NFPA 90A, and local building, plumbing, and wastewater codes.

All appliances must be electrically grounded in accordance with local codes, or in the absence of local codes, the current National Electric Code, ANSI/NFPA 70, or the current Canadian Electrical Code, CSA C22.1.

CAUTION

The Clean Air Act of 1990 bans the intentional venting of refrigerant as of July 1, 1992. Approved methods of recovery, recycling, or reclaiming must be followed.

WARNING

Coils and sheet metal surfaces present sharp edges, and care must be taken when working with equipment.

WARNING

Failure to observe the following instructions will result in premature failure of your system and possible voiding of the warranty.

CAUTION

Field installed pipework must be protected from physical damage in operation and service. All joints must be accessible for inspection prior to being covered. Install in accordance with applicable local codes. In the absence of local codes, install in accordance with ASHRAE 15, ASHRAE 15.2, IAPMO Uniform Mechanical Code, ICC International Mechanical Code, or CSA B52. Do not install any field made joints within the conditioned airstream.

4.2. Receiving Unit

When received, the unit should be checked for damage that might have occurred in transit. If damage is found it should be noted on the carrier's Freight Bill. A request for inspection by carrier's agent should be made in writing at once.

Nameplate should be checked to ensure the correct model sizes and voltages have been received to match the job requirements.

If repairs must be made to damaged goods, notify the factory before any repair action is taken in order to protect the warranty. Certain equipment alteration, repair, and manipulation of equipment without the manufacturer's consent may void the product warranty. Contact the AAON Technical Support for assistance with handling damaged goods, repairs, and freight claims: (918) 382-6450.

Note: Upon receipt, check the shipment for items that ship loose, such as remote sensors. Consult order and shipment documentation to identify potential loose-shipped items. Loose-shipped items may have been placed inside the unit cabinet for security. Installers and owners must secure all doors with locks or nuts and bolts to prevent unauthorized access.

4.3. Storage

If the installation will not occur immediately following delivery, store equipment in a dry, protected area away from construction traffic and in the proper orientation as marked on the packaging with all internal packaging in place. Secure all loose-shipped items. Unit must be stored in accordance with ASHRAE 15 requirements for machine rooms.

4.4. Direct Expansion (DX Systems)

WARNING

Compressor Cycling:

3 Minute Minimum Off Time - To prevent the motor from overheating, compressors must cycle off for a minimum of 3 minutes.

5 Minute Minimum on Time - To maintain the proper oil level, compressors must cycle on for a minimum of 5 minutes.

The cycle rate must not exceed 7 starts per hour.

All water-cooled condenser DX systems are factory assembled, leak tested, charged with R-454B refrigerant, and run tested.

All DX systems include evaporator coils, liquid line filter dryers, thermostatic expansion valves (TXV), and scroll compressors.

CAUTION

Crankcase Heater:

Some units are equipped with compressor crankcase heaters, which should be energized at least 24 hours prior to cooling operation, to clear any liquid refrigerant from the compressors.

Never turn off the main power supply to the unit, except for servicing, emergency, or complete shutdown of the unit. When power is cut off from the unit, crankcase heaters cannot prevent refrigerant migration into the compressors. This means the compressor may cool down, and liquid refrigerant may accumulate in the compressor. The compressor is designed to pump refrigerant gas, and damage may occur when power is restored.

If power to the unit must be off for more than an hour, turn the thermostat system switch to "OFF", or turn the unit off at the control panel, and leave the unit off until the main power switch has been turned on again for at least 24 hours for units with compressor crankcase heaters. This will give the crankcase heater time to clear any liquid accumulation out of the compressor before it is started.

Always control the unit from the thermostat, or control panel, never at the main power supply, except during an emergency or complete shutdown of the unit.

During the cooling season, if the airflow is reduced due to dirty air filters or any other reason, the cooling coils can get too cold which will cause excessive liquid to return to the compressor. As the liquid concentration builds up, oil is washed out of the compressor, leaving it starved for lubrication.

The compressor life will be seriously shortened by reduced lubrication and the pumping of excessive amounts of liquid oil and refrigerant.

4.5. Wiring Diagrams

Unit specific wiring diagrams are laminated and affixed inside the controls compartment door.

4.6. Condensate Drain Pans

Units require drain p-traps and lines to be connected to the condensate drain pans of the unit. The lines should be the same pipe size or larger than the drain connection, include a p-trap, and pitch downward toward the drain. An air break should be used with long runs of condensate lines.

Waterside economizer coil units include a separate condensate drain pan, which drains into the evaporator coil drain pan. No additional drain line is needed for the waterside economizer drain pan.

CAUTION

The unit should not be operated without a p-trap. Failure to install a p-trap may result in overflow of condensate water.

4.7. Unit Size

Units are modular and composed of a combination of the four standard unit sizes, SA-023, SA-028, SA-030, and SA-035.

Table 1: SA Series Models

Model	Cabinet Type	Intake	Cabinet 1	Cabinet 2
SA-023	Single	Left or Right Side	SA-023	
SA-028			SA-028	
SA-030			SA-030	
SA-035			SA-035	
SA-045	Dual	Left and Right Sides	SA-023	SA-023
SA-050			SA-023	SA-028
SA-055			SA-028	SA-028
SA-058			SA-028	SA-030
SA-060			SA-030	SA-030
SA-065			SA-030	SA-035
SA-070			SA-035	SA-035

5. INSTALLATION

5.1. Locating the Unit

Placement of the unit relative to the ductwork, electrical, and plumbing must be carefully considered. The return air plenum or duct can be mounted directly to the return air flanges. Use flexible gasket material to seal the duct to the unit.

Verify floor or foundation can support the total unit weight, including accessory weights. The unit must be level in both horizontal axes to support the unit and reduce noise and vibration from the unit. If the unit is to be installed indoors, or in areas without sufficient ventilation, provide venting from all pressure relief outlets to outdoors in accordance with ASHRAE 15 requirements.

Allow adequate service clearances as shown on the unit nameplate and unit drawing. Consult your local building codes for additional service clearance requirements.

Allow adequate space for piping access and panel removal. Condenser water piping and condensate drain connections are near the bottom of the back of the unit.

Figure 1: SA Series Unit with Right Intake

5.2. Lifting and Handling the Unit

Before lifting the unit, be sure that all shipping material has been removed from the unit.

WARNING

Unit Handling:
Incorrect lifting can cause damage to the unit, injury, or death. Lifting equipment capacity should exceed unit weight by an adequate safety factor. Always test the lift unit not more than 61 centimeters (24 inches) high to verify the proper center of gravity lift point.

If cables or chains are used to hoist the unit, care should be taken to prevent damage to the cabinet.

Secure hooks and cables at all lift points provided near the fan section at the top of the unit.

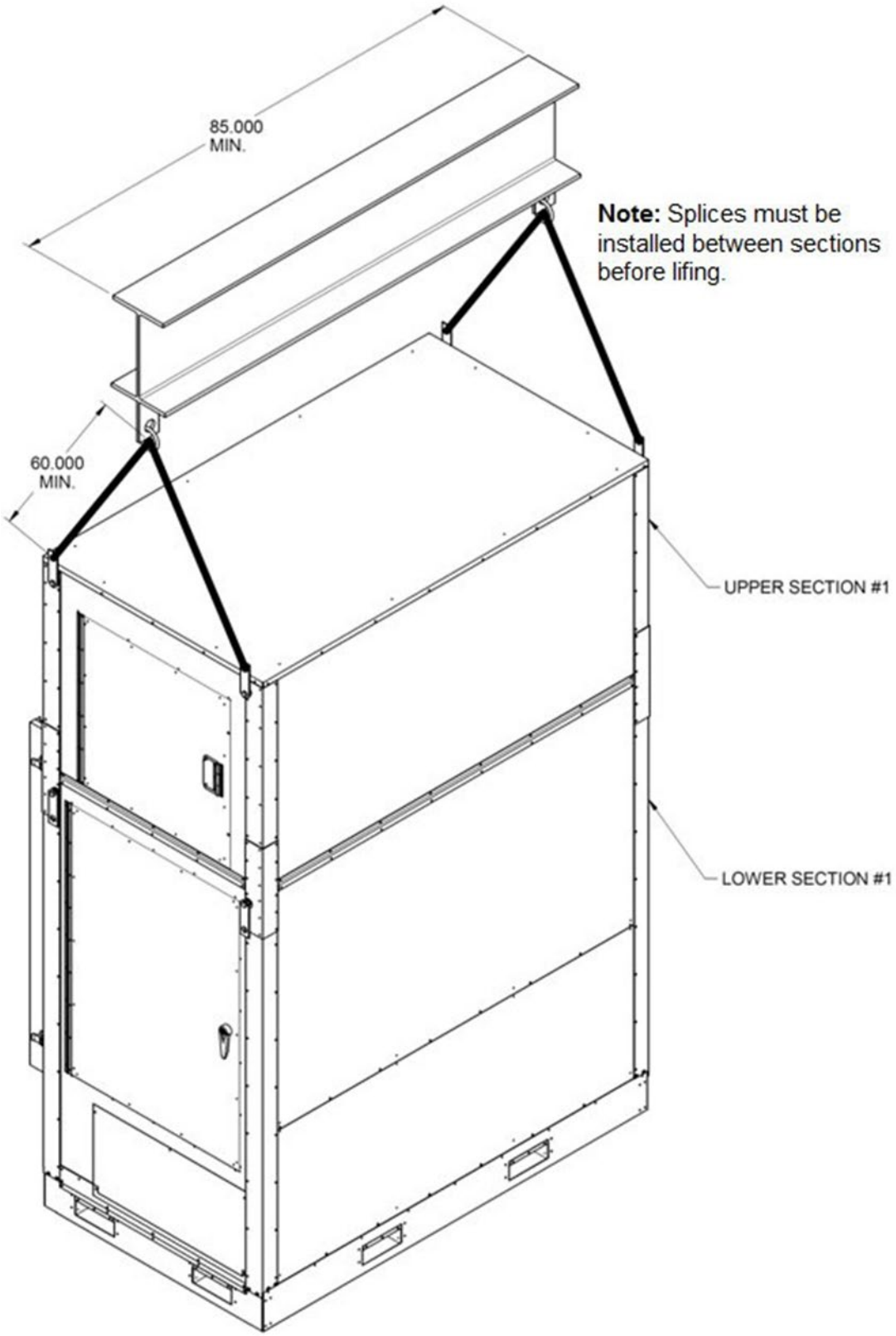

Figure 2: One Piece Single Unit Lifting Details

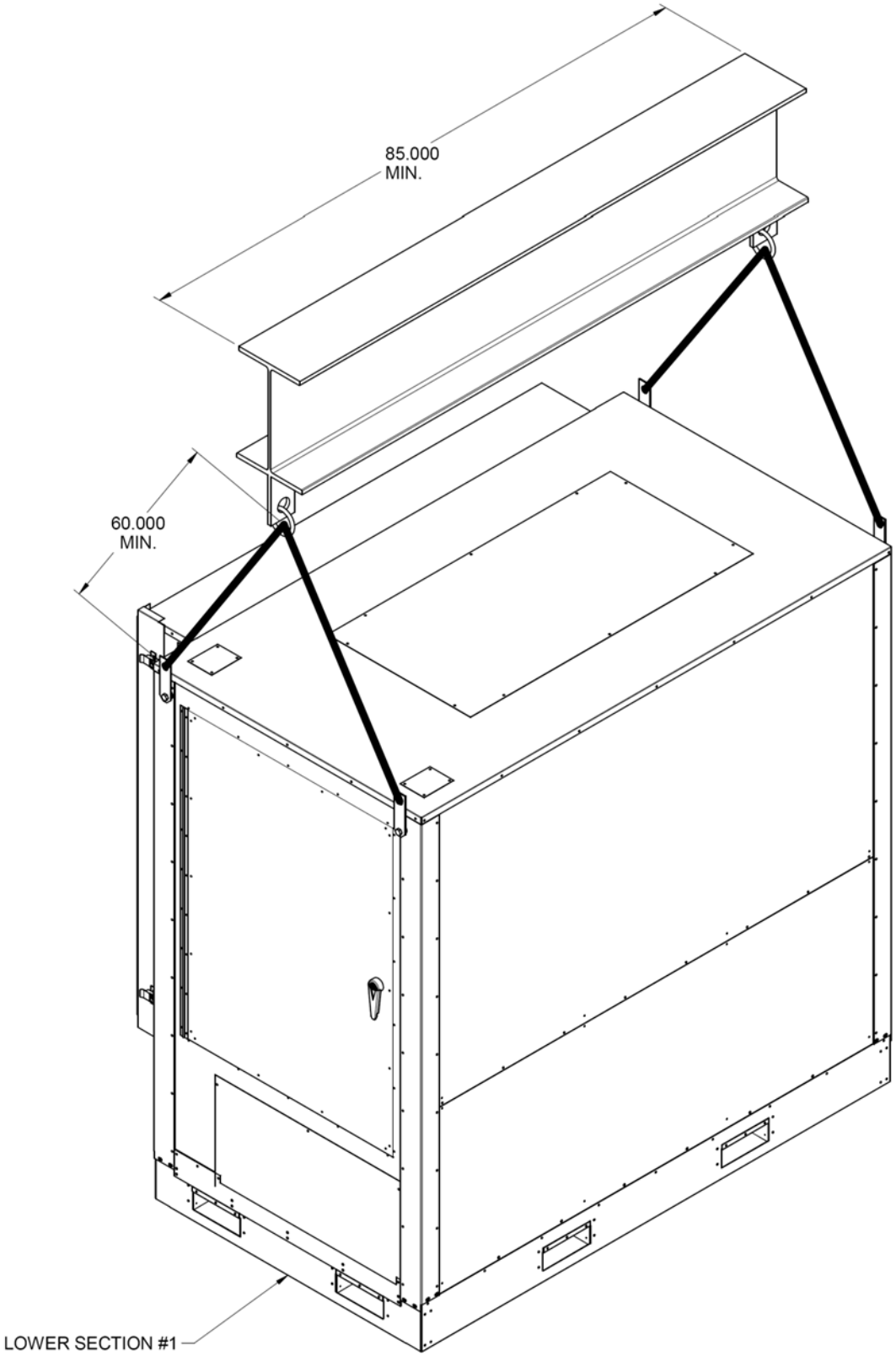

Figure 3: Two Piece Single Unit Coil Section Lifting Details

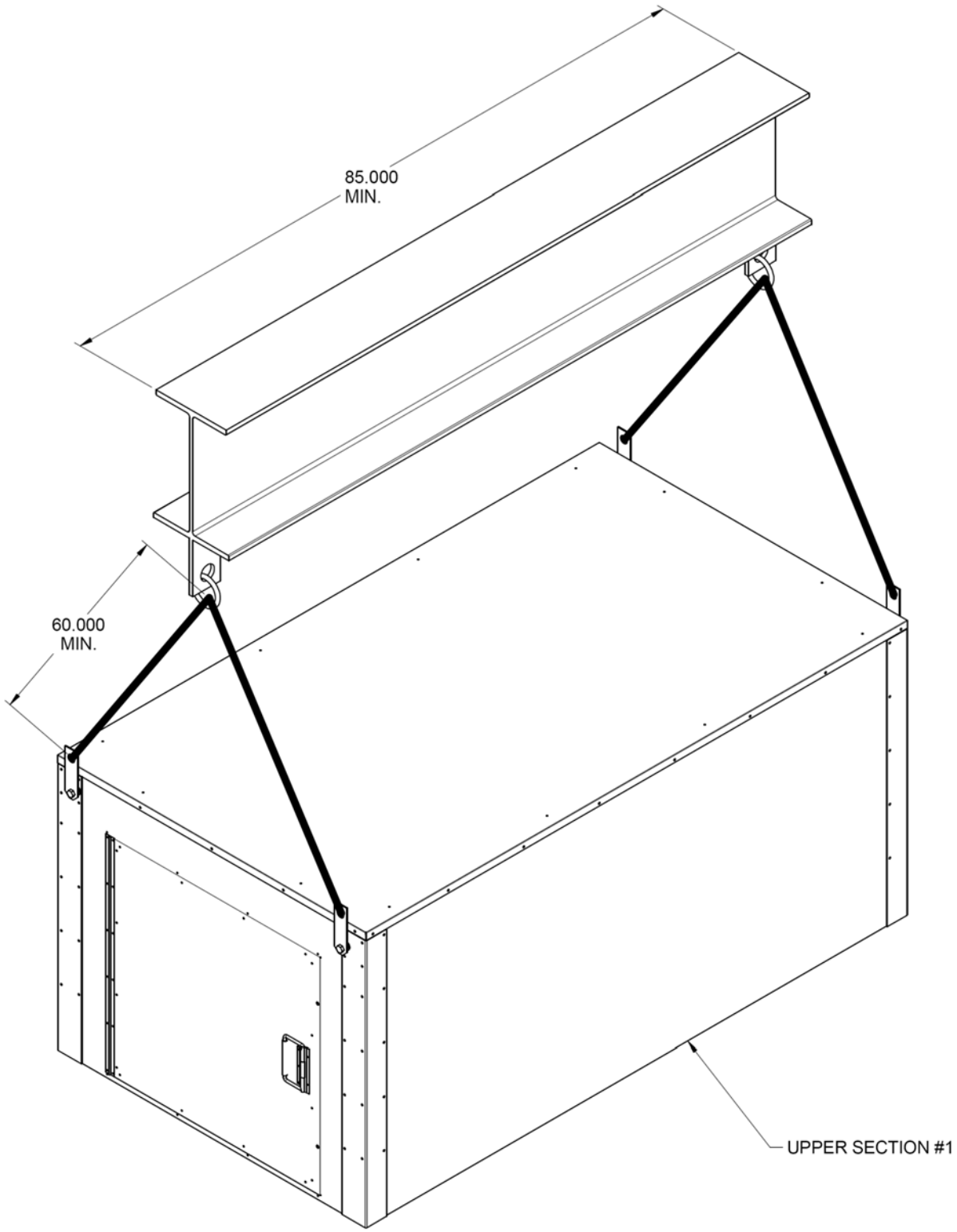

Figure 4: Two Piece Single Unit Fan Section Lifting Details

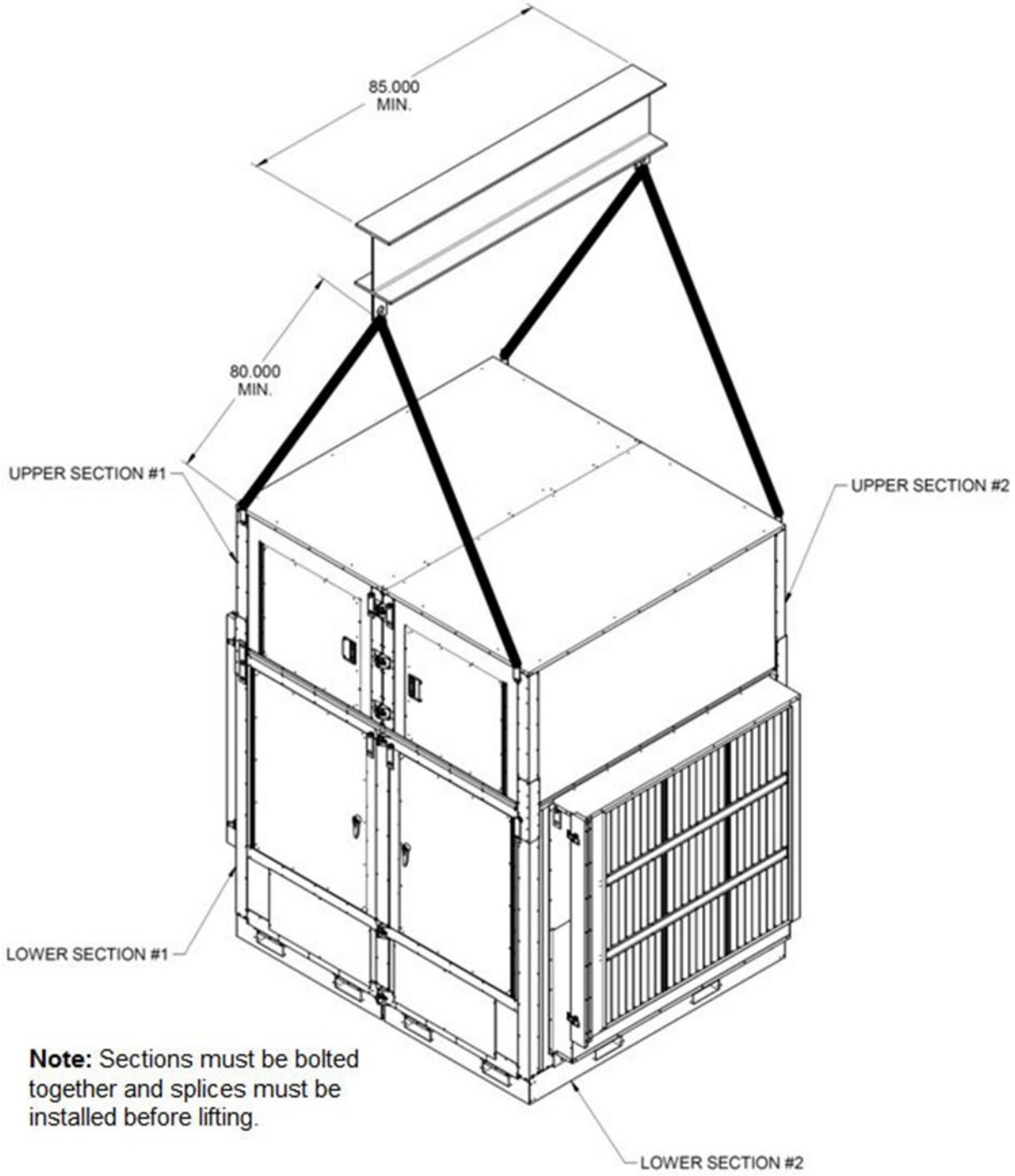

Figure 5: One Piece Dual Unit Lifting Details

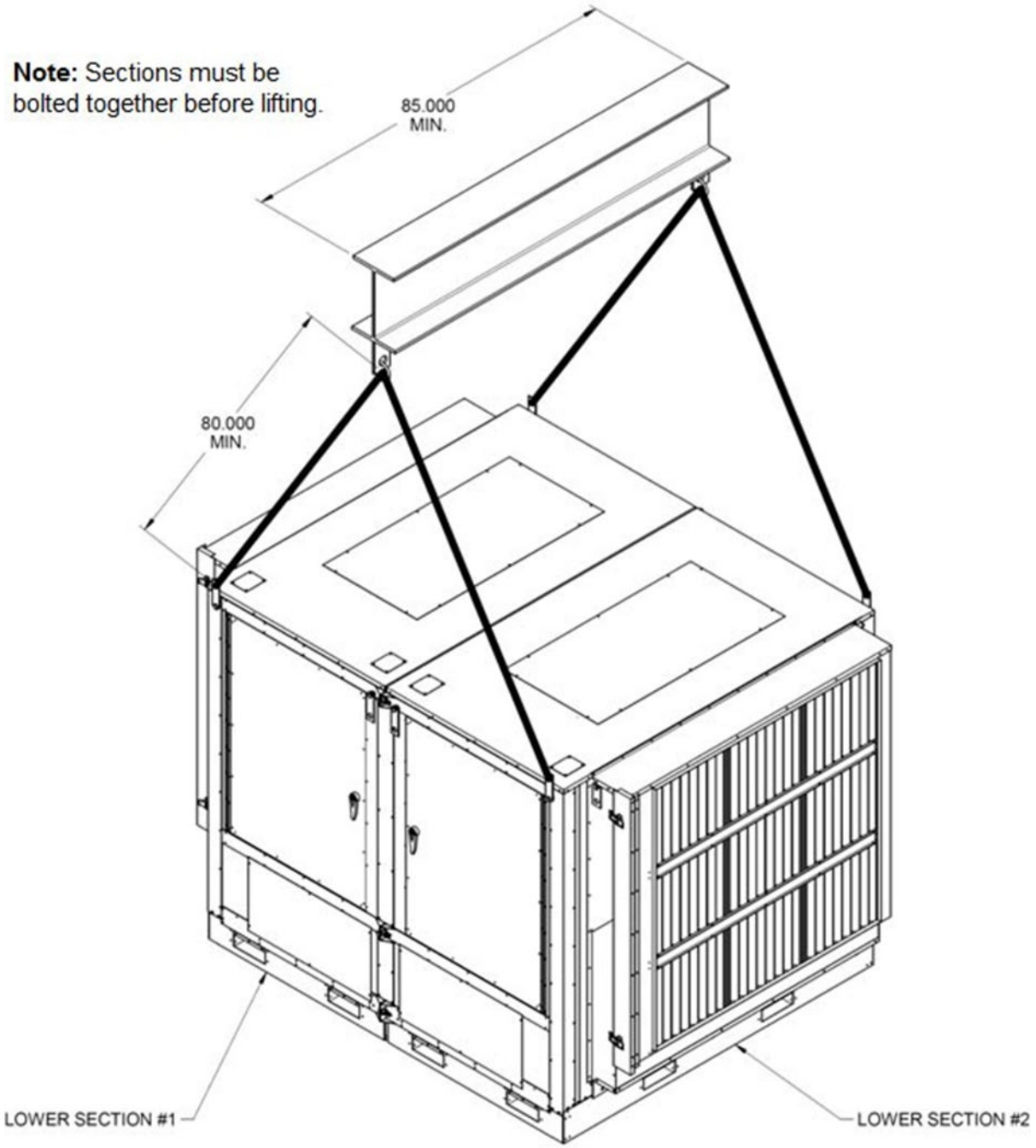

Figure 6: Two Piece Dual Unit Coil Section Lifting Details

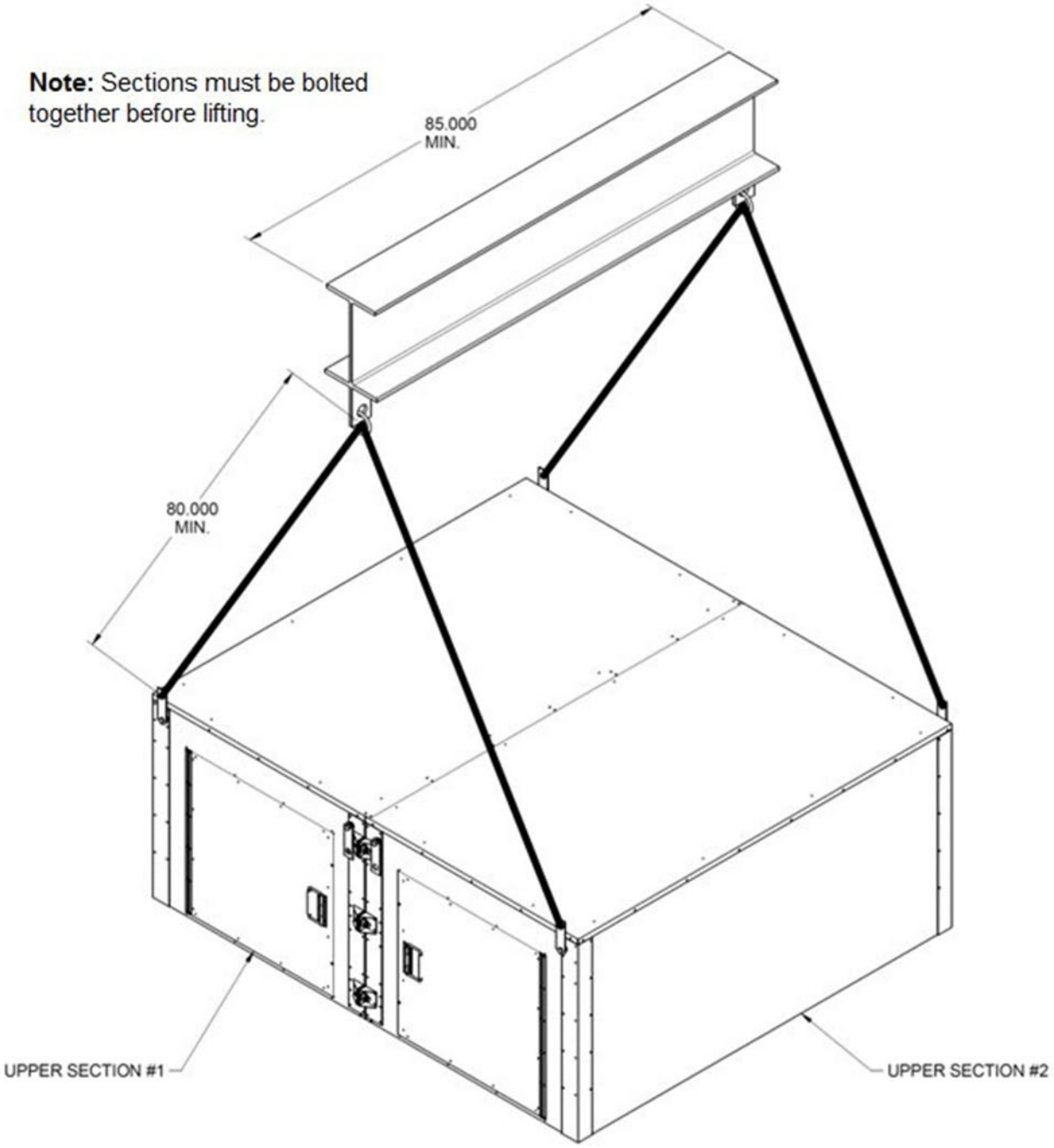

Figure 7: Two Piece Dual Unit Fan Section Lifting Details

5.3. Split Unit Assembly

Units may be split into modules for shipping. Fan and coil modules must be bolted together, and factory provided splices must be installed before operation of the unit.

Split units will also require an electrical connection between the modules and individual units after assembly. See the Electrical Installation section and unit-specific wiring diagrams, within the unit control compartment, for details.

Assembly

1. Remove all shipping covers prior to assembly of modules.
2. Move the coil section to the required location. See Figure 8.
3. For dual units (45-70 tons), move the second coil section close to the first coil section and align the bolt holes of the coil sections. Compressor and control service access doors of each section should be on the same side of the complete unit. A crowbar or similar tool can be used to line up the sections. Factory provided bolts can then be used to secure the coil sections together. See Figure 9.
4. Align and set each fan section on top of the coil section(s).
5. For dual units, align the bolt holes of the fan sections if they are shipped separately. Fan service access doors of each section should be on the same side of the complete unit. A crowbar or similar tool can be used to line up the sections. Factory provided bolts can then be used to secure the fan sections together. See Figure 9.
6. For dual units, install horizontal, vertical, and top splices, overlapping the fan and coil sections. Fasten splices with self-tapping #10 hex head screws. See Figure 9 and Figure 10. Single units (23-35 tons) do not require these splices. Only corner slices are required for single units.
7. Install corner splices, overlapping the fan and coil sections. Fasten splices with self-tapping #10 hex head screws. See Figure 9 and Figure 10.

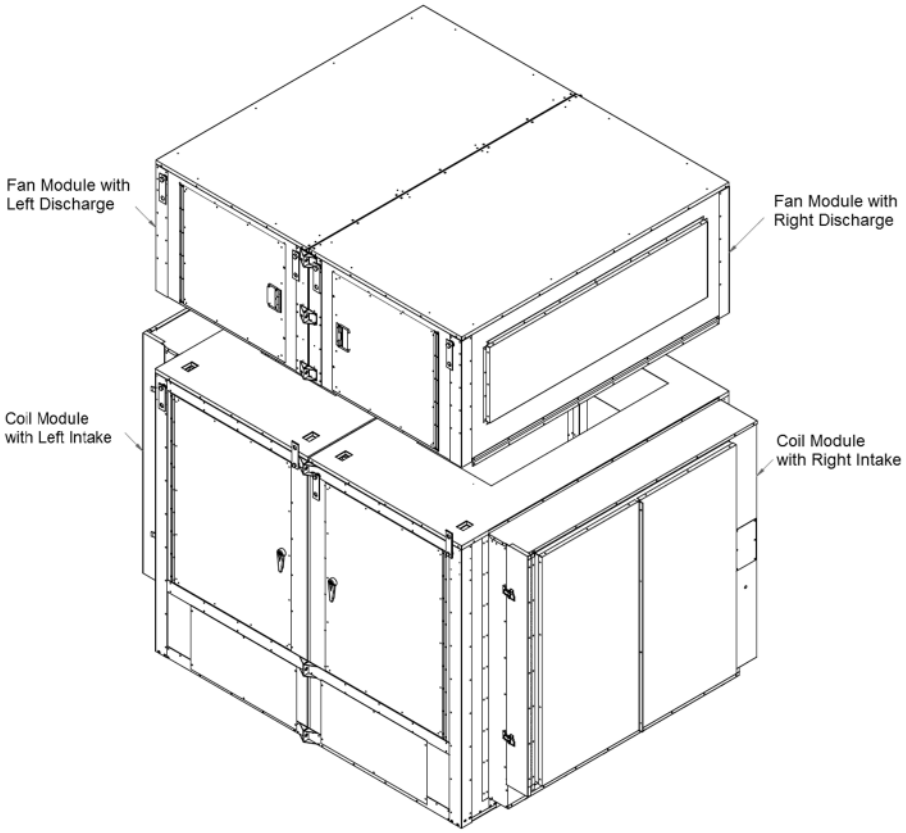

Figure 8: Dual Unit Without Splices and Before Being Bolted Together

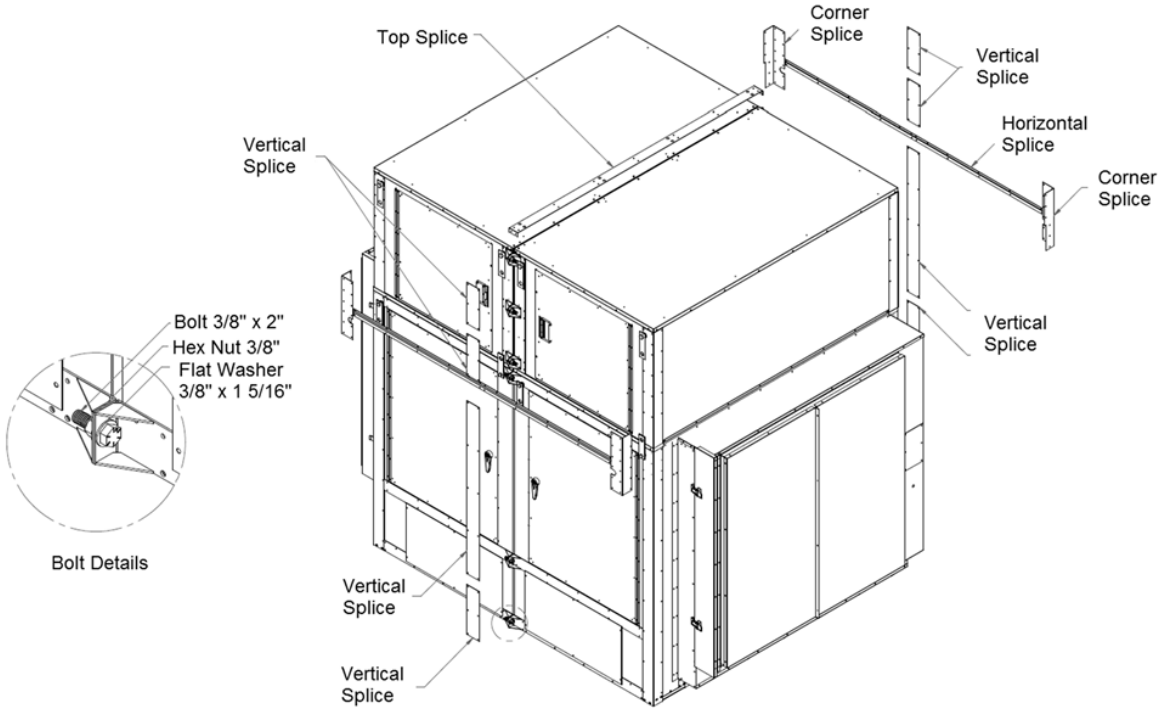

Figure 9: Dual Unit Assembly Details

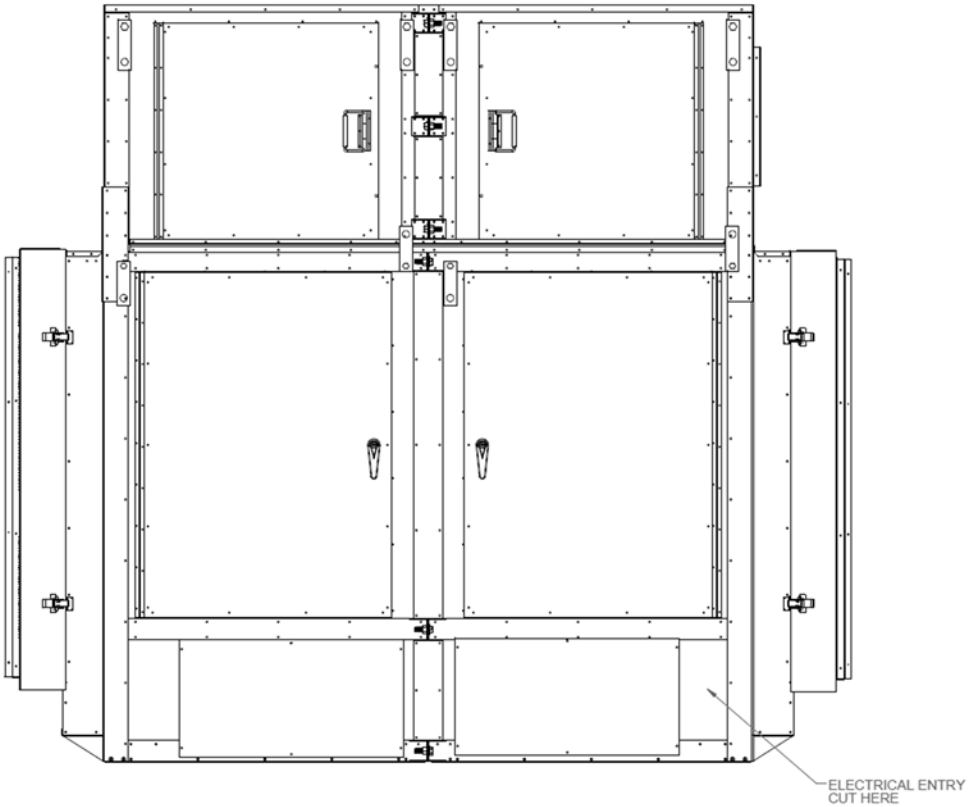

Figure 10: Dual Unit with Splices After Being Bolted Together

5.4. Split Unit Assembly

5.4.1. Refrigerant to Water Heat Exchanger

Condenser water pump, condenser water piping, cooling tower, pressure gauges, strainers, piping, insulation, and all components of the waterside piping must be field installed.

5.4.2. Open Loop Applications

This product contains one or more refrigerant-to-water heat exchangers made of 316 Stainless Steel. 316 Stainless Steel is subject to severe corrosion and failure when exposed to chlorides.

WARNING

Open Loop Applications:
Failure of the condenser as a result of chemical corrosion is excluded from coverage under AAON Inc. warranties and the heat exchanger manufacturer's warranties.

Do not allow water containing any form of chlorides to enter this heat exchanger.

Common forms of chlorides include:

1. Sea water mist entering an open cooling tower system.
2. Contaminated make-up water containing salt water.
3. Disinfection of the water loop with solutions containing sodium hypochlorite.

Chlorides will result in a premature failure of the condenser.

Failure of the condenser as a result of chemical corrosion is excluded from coverage under AAON warranties and the heat exchanger manufacturer's warranties.

Failure of the condenser will allow water to enter the refrigerant circuit and will cause extensive damage to the refrigerant circuit components. Any damage to the equipment as a result of condenser failure from chemical corrosion due the fluid in the condenser is excluded from coverage under AAON warranties and the heat exchanger manufacturer warranties.

WARNING

Open Loop Applications:
SMO 254 brazed-plated refrigerant-to-water heat exchangers are recommended with all open loop applications. Failure to use a SMO 254 heat exchanger may result in premature failure of your system and possible voiding of the warranty.

CAUTION

Cleaning the cooling tower or condenser water loop with harsh chemicals such as hydrochloric acid (muriatic acid), chlorine or other chlorides can damage the refrigerant-to-water heat exchanger. Care should be taken to avoid allowing chemicals to enter the refrigerant-to-water heat exchanger. See Appendix A - Heat Exchanger Corrosion Resistance for more information.

5.4.2.1. Freezing Water in the Heat Exchanger

This product contains one or more refrigerant-to-water heat exchangers. A refrigerant-to-water heat exchanger contains refrigerant in one passage and water in another passage. Water is subject to freezing at 0°C (32°F). When water freezes in a heat exchanger, significant forces are exerted on the components of the heat exchanger where the water is confined.

Failure of the condenser due to freezing will allow water to enter the refrigerant circuit and will cause extensive damage to the refrigerant circuit components. Any damage to the equipment as a result of water freezing in the condenser is excluded from coverage under AAON warranties and the heat exchanger manufacturer's warranties.

WARNING

Water Freezing:
Failure of the condenser due to freezing will allow water to enter the refrigerant circuit and will cause extensive damage to the refrigerant circuit components. Any damage to the equipment as a result of water freezing in the condenser is excluded from coverage under AAON warranties and the heat exchanger manufacturer's warranties.

The unit is capable of operating with Entering Water Temperatures (EWT) as low as 13.9°C (57°F), during the cooling mode, without the need for head pressure control. If the EWT is expected to be lower than 13.9°C (57°F) or more stable operation is desired, a factory provided head pressure control water valve option is available.

Glycol solution should be used if ambient temperatures are expected to fall below freezing or if the loop entering water temperature to the unit is below 10°C (50°F) while operating in the heating mode (heat pump units only). Adding glycol to condenser water causes an increase in pressure drop and also results in a decrease in unit performance. A minimum concentration of 20% glycol solution is recommended.

Table 2: Glycol Freezing Points (Metric)

% Glycol	Ethylene Glycol	Propylene Glycol
20	-7.8°C	-7.2°C
30	-13.9°C	-12.8°C
40	-21.7°C	-21.1°C
50	-33.3°C	-32.8°C

Table 3: Glycol Freezing Points (Imperial)

% Glycol	Ethylene Glycol	Propylene Glycol
20	18°F	19°F
30	7°F	9°F
40	-7°F	-6°F
50	-28°F	-27°F

Water loop piping runs through unheated areas or outside the building should be insulated.

5.4.3. Water Piping

The installing contractor must ensure a differential pressure switch or water flow switch is installed between the condenser water supply and return connections. This sensor provides a signal to the unit controller that water flow is present in the refrigerant-to-water heat exchanger, and the unit can operate without damaging unit components.

WARNING

Water Pressure:
Prior to connection of the condensing water supply, verify that the water pressure is less than the maximum pressure shown on the unit nameplate. To prevent injury or death due to the instantaneous release of high-pressure water, relief valves should be field supplied on water piping. Supply water connection may require a backflow preventer to prevent supply makeup water from backing up into the public water system.

Table 4: Condenser Water Connections

Model (SA-)	Supply and Return Connection Size
023, 045 (x2)	3.8 cm (1 1/2") MPT
028, 030, 035, 050, 055, 058, 060, 065, 070 (x2)	5 cm (2") MPT

Only use approved water pipe material. Avoid using galvanized material for water lines/fittings as the material is corrosive and may cause fouling of the water system.

CAUTION

PVC (Polyvinyl Chloride) and CPVC (Chlorinated Polyvinyl Chloride) are vulnerable to attack by certain chemicals. Polyolester (POE) oils used with R-454B and other refrigerants, even in trace amounts, in a PVC or CPVC piping system will result in stress cracking of the piping and fittings and complete piping system failure.

The condenser water pump must be field sized and installed between the cooling tower and self-contained unit. The system should be sized in accordance with the ASHRAE Handbook. Use engineering guidelines to maintain equal distance for the supply and return piping and to limit the bend radius to maintain balance in the system. Balancing valves, permanent thermometers, and gauges may be required.

CAUTION

Water Piping:
Follow national and local codes when installing water piping. Connections to the unit should incorporate vibration eliminators to reduce noise and vibration and shut off valves to facilitate servicing. Supply and return water piping must be at least as large as the unit connections and larger depending on the length of runs, rise, and bends.

Before connecting to the unit, the condenser water system should be flushed to remove foreign material that could cause condenser fouling. A screen strainer with a minimum of 20 Mesh is provided ahead of the condenser inlet to prevent condenser fouling and internal tube damage.

Mineral content of the condenser water must be controlled. All make-up water has minerals in it, and as the water is evaporated in the cooling tower, these minerals remain. As the mineral content of the water increases, the conductivity of the water increases.

Field provided and installed water treatment program must be compatible with stainless steel, copper, aluminum, ABS plastic, and PVC. Batch feed processes should never be used as concentrated chemicals can cause corrosion. Never use hydrochloric acid (muriatic acid) or chlorine as it will corrode stainless steel.

CAUTION

Each heat exchanger may be equipped with a refrigerant pressure relief device to relieve pressure should excessive condensing pressures 4.654 Mpa (>675 psig) occur. Codes may require the installing contractor to connect and route relief piping outdoors. The relief valve has a 1.6 cm (5/8") male flare outlet connection.

Note: Ball valves should be installed in the condenser water supply and return lines for unit isolation and water flow balance. All manual flow valves should be of the ball valve design. Globe or gate valves should not be used due to high pressure drops and poor throttling characteristics.

Pressure and temperature ports are recommended in condenser water supply and return lines for system balancing. These openings should be 5 to 10 pipe diameters from the unit water connections. To allow for mixing and temperature stabilization, wells in the water piping should extend at least ½ pipe diameter into the pipe.

CAUTION

A qualified technician is responsible for properly sizing and installing water system components. Improper fluid flow due to valves, piping, or improper pump operation may result in unacceptable unit operation and void the warranty.

Table 5: Condenser Pressure Drops (Each Heat Exchanger)

SA-023		SA-028		SA-030		SA-035	
LPM (GPM)	KPA (PSI)	LPM (GPM)	KPA (PSI)	LPM (GPM)	KPA (PSI)	LPM (GPM)	KPA (PSI)
170.6 (45)	29 (4.2)	170.6 (45)	29 (4.2)	170.6 (45)	29 (4.2)	170.6 (45)	1.7 (11.7)
147.8 (39)	22.8 (3.3)	147.8 (39)	22.8 (3.3)	147.8 (39)	22.8 (3.3)	147.8 (39)	
132.7 (35)	19.3 (2.8)	132.7 (35)	19.3 (2.8)	132.7 (35)	19.3 (2.8)	132.7 (35)	
SA -045		**SA-050**		**SA-055**		**SA-058**	
LPM (GPM)	KPA (PSI)	LPM (GPM)	KPA (PSI)	LPM (GPM)	KPA (PSI)	LPM (GPM)	KPA (PSI)
170.6 (45)	29 (4.2)	170.6 (45)	29 (4.2)	170.6 (45)	29 (4.2)	170.6 (45)	29 (4.2)
147.8 (39)	22.8 (3.3)	147.8 (39)	22.8 (3.3)	147.8 (39)	22.8 (3.3)	147.8 (39)	22.8 (3.3)
132.7 (35)	19.3 (2.8)	132.7 (35)	19.3 (2.8)	132.7 (35)	19.3 (2.8)	132.7 (35)	19.3 (2.8)
SA -060		**SA-065**				**SA-070**	
		Heat Exchanger 1		Heat Exchanger 2			
LPM (GPM)	KPA (PSI)	LPM (GPM)	KPA (PSI)	LPM (GPM)	KPA (PSI)	LPM (GPM)	KPA (PSI)
170.6 (45)	29 (4.2)	170.6 (45)	29 (4.2)	170.6 (45)	1.7 (11.7)	170.6 (45)	1.7 (11.7)
147.8 (39)	22.8 (3.3)	147.8 (39)	22.8 (3.3)	147.8 (39)		147.8 (39)	
132.7 (35)	19.3 (2.8)	132.7 (35)	19.3 (2.8)	132.7 (35)		132.7 (35)	

CAUTION

Do not exceed the recommended condenser fluid flow rates shown in the table above. Serious damage to or erosion of the heat exchanger tubes could occur.

Piping systems should not exceed 3.1 m/s (10 ft/sec) fluid velocity to ensure tube wall integrity and reduce noise.

5.4.4. Brazed Plate Heat Exchanger Cleaning

Because of a normally high degree of turbulence in brazed plate heat exchangers, for many applications, the heat exchanger channels are self-cleaning. For applications that are not self-cleaning (i.e., hard water at high temperatures, etc.) or applications where additional cleaning is desired, it is possible to clean the brazed plate heat exchanger by circulating a cleaning liquid.

Use a tank with weak acid, 5% phosphoric acid (H_3PO_4) or, if the exchanger is frequently cleaned, 5% oxalic acid ($H_2C_2O_4$). Pump the cleaning liquid through the exchanger. For optimum cleaning, the cleaning solution flow rate should be a minimum of 1.5 times the normal flow rate, preferably in a back-flush mode. After cleaning, the heat exchanger must be rinsed with clean water. A solution of 1-2% sodium hydroxide (NaOH) or sodium bicarbonate (NaHCO) before the last rinse ensures that all acid is neutralized.

WARNING

Disconnect all electrical power sources before servicing the unit. More than one power source may be provided. Failure to do so may result in injury or death from electrical shock or entanglement in moving parts.

WARNING

The foam insulation releases dangerous fumes when it is burnt. Do not cut the foam part with a cutting torch or plasma cutter. Do not weld to a foam-filled part.

5.5. Electrical

Verify that the unit's name plate agrees with power supply. SA Series units are provided with single point power wiring connections. For units not equipped with an incoming power disconnect, this means all pole disconnections must be provided in the fixed wiring in accordance with local or national codes.

Connection terminations are made to the main terminal block. A complete set of unit specific wiring diagrams, showing factory and field wiring is laminated in plastic, and all units require field supplied electrical overcurrent and short circuit protection. The device must not be sized larger than the Maximum Overcurrent Protection (MOP) shown on the unit nameplate.

Table 6: Nameplate Voltage Markings & Tolerances

Hz	Nameplate Voltage	Nominal System Voltage	Operating Voltage Range [1]		Acceptable Performance Range[2]	
			Min	Max	Min	Max
60	115	120	104	127	108	126
	208/230	208/240	187	254	187	252
	208	208	187	228	187	228
	230	240	208	254	216	252
	265	277	240	293	249	291
	460	480	416	508	432	504
	575	600	520	635	540	630
50	230	230	198	254	208	254
	400	400	344	440	360	440

Note: Operating voltage is the min and max voltage for which the unit can function. Never operate outside of this min and max voltage.

Note: The Acceptable Performance Range is the min and max voltage for which the unit performance is designed and rated to give acceptable performance.

Route power and control wiring, separately, through the utility entry in the unit. Do not run power and control signal wires in the same conduit.

Codes may require a disconnect switch to be within sight of the unit. It is recommended that the field installed overcurrent protection or disconnect switch not be installed on the unit.

The electrical supply can enter through the bottom or side of the controls compartment. The entry must be field cut into panels of the unit.

A single point connection to a terminal block is provided. Split units may require a connection between the units. High voltage conductors should enter the control panel in a separate opening and separate conduit from 24V low voltage conductors.

CAUTION

Ensure that wires are protected from sharp edges, damage, and wear caused by normal operation of the unit and environmental factors.

Note: Locations for field cut electrical entries are marked on the unit. Field cut openings must be a minimum of 15.25 centimeters (6 inches) away from all components and wiring to prevent damage due to drilling or cutting.

To pass wires through the wall or roof of the unit, a hole should be cut and conduit passed through it. Use the following procedure to cut a round hole in a foam panel.

5.5.1. Cutting Electrical Openings

1. Locate the placement of the hole. Be sure that the conduit will not interfere with the operation of any component or prevent access to any door or removable panel.
2. Drill a pilot hole all the way through the foam panel.
3. Using a hole saw, cut the hole through the metal on both sides of the foam part.
4. With a knife, cut the foam out of the hole.
5. After the conduit is installed in the hole, caulk the entire perimeter of the hole on both sides with an industrial grade silicone sealant or a duct seal compound.

If a larger cut-out is needed for additional duct connections not provided by the factory, or for any other reason, it is very important that the foam be completely sealed. Insulation covers should be fabricated from sheet metal to cover the foam at the cut. The edges and corners that are not covered should then be sealed using silicone caulking or a duct seal compound.

If a reciprocating saw is used to make the cut-out, take care that the metal skins of the foam part do not separate from the foam; this would result in reduced structural integrity of the part.

Size supply conductors based on the unit Minimum Current Ampacity (MCA) rating. Supply conductors must be rated at a minimum of 75°C (167°F).

Protect the branch circuit in accordance with code requirements. The unit must be electrically grounded in accordance with local codes, or in the absence of local codes, the current National Electric Code, ANSI/NFPA 70, or the current Canadian Electrical Code, CSA C22.1.

Note: All units are factory wired for 208/230V, 460V, or 575V. If the unit is to be connected to a 208V supply, the transformer must be rewired to 208V service. For 208V service interchange, the yellow and red conductors are on the low voltage control transformer.

Red-Black for 208V

Yellow-Black for 230V

Wire power leads to the unit's terminal block or main disconnect. All wiring beyond this point has been completed by AAON and cannot be modified without effecting the unit's agency/safety certification.

The supply voltage must be within the min/max range shown on the unit nameplate. The available short circuit current should not exceed the short circuit current rating (SCCR) shown on the unit nameplate.

Three phase voltage imbalance will cause motor overheating and premature failure. The maximum allowable imbalance is 2.0%.

Voltage imbalance is defined as 100 times the maximum deviation from the average voltage divided by the average voltage

Example:

(221V+230V+227V)/3=226V, then 100*(226V-221V)/226V=2.2%, which exceeds the allowable imbalance.

Check voltage imbalance at the unit disconnect switch and at the compressor terminal. Contact your local power company for line voltage corrections.

The installing contractor must check for proper motor rotation and ensure that the blower motor amperage listed on the motor nameplate is not exceeded. Motor overload protection may be a function of the variable frequency drive (VFD) and must not be bypassed

CAUTION

Rotation must be checked on all Motors and Compressors of three-phase units. Supply fan motors should all be checked by a qualified service technician at startup, and any wiring alteration should only be made at the unit's power connection.

CAUTION

Scroll compressors are directional and will be damaged by operation in the wrong direction. Low pressure switches on compressors have been disconnected after factory testing. Rotation should be checked by a qualified service technician at startup using suction and discharge pressure gauges, and any wiring alteration should only be made at the unit's power connection.

Wire control signals to the unit's low voltage terminal block located in the controls compartment.

If any factory installed wiring must be replaced, use a minimum 105°C (221°F) type AWM insulated conductors.

5.5.2. Thermostat Control Wiring

If a thermostat is used for unit control, thermostat should be located on an inside wall 4-5 feet above the floor where it will not be subjected to drafts, sun exposure, or heat from electrical fixtures or appliances. Control wiring must deliver adequate voltage to components to ensure proper operation. Control voltage returning from controller circuit must be a minimum of 21 VAC. To ensure proper wiring use the following chart to determine the allowable wiring distances.

Table 7: Control Wiring

Wire Size (Stranded) - Copper Conductors Only	Total Wire Distance Allowable	
20 AWG	60.96 m	200 ft
18 AWG	106.7 m	350 ft
16 AWG	152.4 m	500 ft
14 AWG	228.6 m	750 ft
12 AWG	381.0 m	1250 ft

Total Wire Distance Allowable = (Quantity of Control Wires) x (Control Wire Distance)

Take the total wire distance allowable and divide by the number of wires to be connected. This indicates the distance allowable for that size wire. The wiring to the unit must not exceed the total wire distance allowable. If the voltage at the connectors is less than 21 VAC, isolation relays must be installed. If under external control 21 VAC must be field verified.

All external devices must be powered via a separate external power supply.

Example:

A total of eight wires must be pulled 22.9 m (75ft) to control the unit. What size wire should be used?

According to the Table 6, 16 AWG allows for 63ft (500 ft/8 wires) and 14 AWG allows for 94ft (750 ft/8 wires). Thus, 14 AWG should be used.

5.5.3. Fuses and Circuit Breakers

The interrupting rating of fuses and circuit breakers is to be determined based on the KAIC rating of the unit. Refer to the wiring diagram for fuse sizing.

Table 8: 35 KAIC Fuse Sizing

35 KAIC Construction		
Component	Description	Interrupting Rating (kA)
Fuse	Class CC, 600V, 0.5A - 30A	200
Fuse	Class J, 600V, 35A - 600A	200
Disconnect	3P, 600V, 15A - 600A	35

Table 9: 65 KAIC Fuse Sizing

65 KAIC Construction		
Component	Description	Interrupting Rating (kA)
Fuse	Class CC, 600V, 0.5A - 30A	200
Fuse	Class J, 600V, 35A - 600A	200
Disconnect	3P, 600V, 15A - 600A	65

5.6. Duct Connection

Return air enters from either the left, right, or both the left and right sides of the unit, where the air filters are located. Ductwork should be sized in accordance with the ASHRAE Handbook. Ductwork should be installed in accordance with NFPA Standard 90A.

When attaching duct to the unit, use a flexible/compressible material rated for duct connections. A 1.2 centimeter (3-inch) flexible connector for both return and supply duct connections is recommended.

Supply air duct connections can be on the left, right, back, or top sides of the supply fan plenum. See the unit drawing for more information.

Table 10: Duct Connection Size (Metric)

Location	Model (SA-)	
	023-025 (m)	045-070 (m)
Top	0.8 x 1.6	(2) 0.8 x 1.6
Back	0.5 x 0.8	(2) 0.5 x 0.8
Side (Right or Left)	0.5 x 1.6	(2) 0.5 x 1.6

Table 11: Duct Connection Size (Imperial)

Location	Model (SA-)	
	023-025	045-070
Top	30" x 64"	(2) 30" x 64"
Back	19" x 30"	(2) 19" x 30"
Side (Right or Left)	19" x 64"	(2) 19" x 64"

5.7. Condensate Drain Piping

The unit may be equipped with more than one condensate drain pan connection. A p-trap and drain line must be installed on every drain connection, with the p-trap not to exceed 15.24 cm (6") from the drain connection. The lines should be the same pipe size or larger than the drain connection, include a p-trap, and pitch downward toward the drain. An air break should be used with long runs of condensate lines.

Draw-through cooling coils will have a negative static pressure in the drain pan area. This will cause an un-trapped drain to back up due to air being pulled up through the condensate drain piping.

Condensate drain trapping and piping should conform to all applicable governing codes.

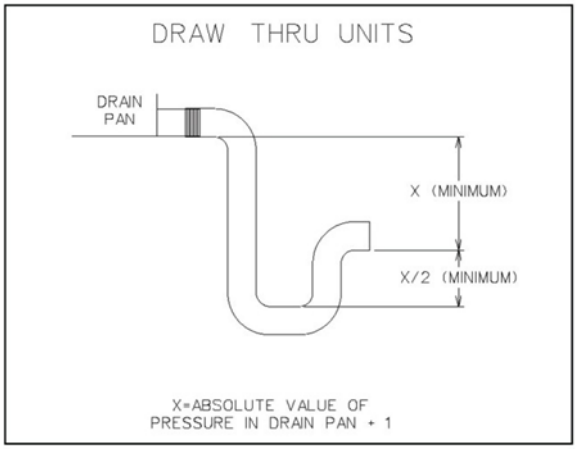

Figure 11: Drain Trap

Note: The drain pan connection is a 2.5 cm (1") MPT fitting.

The X dimension on the draw-through trap should be at least equal to the absolute value of the negative static pressure in the drain pan plus one inch. To calculate the static pressure at the drain pan, add the pressure drops of all components upstream of the drain pan, including the cooling coil, and add the return duct static pressure. Include the dirt allowance pressure drop for the filters to account for the worst-case scenario.

The height from the top of the bottom bend of the trap to the bottom of the leaving pipe must be at least equal to one-half of the X dimension. This ensures that enough water is stored in the trap to prevent losing the drain seal during unit startup.

CAUTION

The unit should not be operated without p-traps. Failure to install a p-trap may result in overflow of condensate water.

Note: The absolute value of the fan inlet pressure will always be greater than or equal to the absolute value of the static pressure in the drain pan on draw-through units, so the fan inlet pressure is a safe value to use for the drain pan static pressure.

Table 12: Drain Trap Dimensions (Metric)

Draw-Through		
Drain Pan Pressure	Trap Dimension	
Negative Static	X	X/2
(mm of mercury)	(mm)	(mm)
-0.93	12.70	6.4
-1.87	25.40	12.7
-2.80	38.10	19.1
-3.74	50.80	25.4
-4.67	63.50	31.8
-5.60	76.20	38.1
-6.54	88.90	44.5
-7.47	101.60	50.8

Table 13: Drain Trap Dimensions (Imperial)

Draw-Through		
Drain Pan Pressure	Trap Dimension	
Negative Static	X	X/2
(inches of water)	(inch)	(inch)
-0.50	1.50	0.75
-1.00	2.00	1.00
-1.50	2.50	1.25
-2.00	3.00	1.50
-2.50	3.50	1.75
-3.00	4.00	2.00
-3.50	4.50	2.25
-4.00	5.00	2.50

5.8. Waterside Economizer

Cooling and pre-cooling waterside economizer coil is factory installed upstream of the evaporator coil. Factory tested and field-installed water piping kit includes a fully modulating waterside economizer valve and a fully modulating waterside economizer bypass valve.

The waterside economizer circuit can operate in three modes: waterside economizer only, waterside economizer with mechanical cooling, and mechanical cooling only.

During waterside economizer only mode of operation the condenser water flows through the waterside economizer coil with modulating valves maintaining the supply air temperature setpoint. The condenser water completely bypasses the water-cooled condenser.

During waterside economizer with mechanical cooling mode of operation the condenser water flows through the waterside economizer coil with the waterside economizer modulating valve fully open. The condenser water then passes through water-cooled condenser.

During mechanical cooling only mode of operation the condenser water flows around the waterside economizer coil with the waterside economizer bypass valve fully open. The condenser water then passes through water-cooled condenser.

Waterside economizer coil condensate drain outlet drains into the evaporator coil drain pan. See the previous section on evaporator coil condensate drain piping.

Mineral content of the condenser water must be controlled. All make-up water has minerals in it, and as the water is evaporated in the cooling tower, these minerals remain. As the mineral content of the water increases, the conductivity of the water increases.

Field provided and installed water treatment program must be compatible with stainless steel, copper, aluminum, ABS plastic, and PVC. Batch feed processes should never be used, as concentrated chemicals can cause corrosion. Never use hydrochloric acid (muriatic acid) or chlorine, as it will corrode stainless steel.

5.8.1. Waterside Economizer Piping Kit

CAUTION

A qualified technician is responsible for properly sizing and installing water system components. Improper fluid flow due to valves, piping, or improper pump operation may result in unacceptable unit operation and void the warranty.

For single cabinet units connect the three factory provided piping assemblies. For dual cabinet units connect both sets of factory provided piping assemblies.

Connect the piping assembly to the unit.

Connect the actuators to the water valves. Actuators are factory wired and included inside the unit.

Figure 12: SA Series Unit with Waterside Economizer Piping

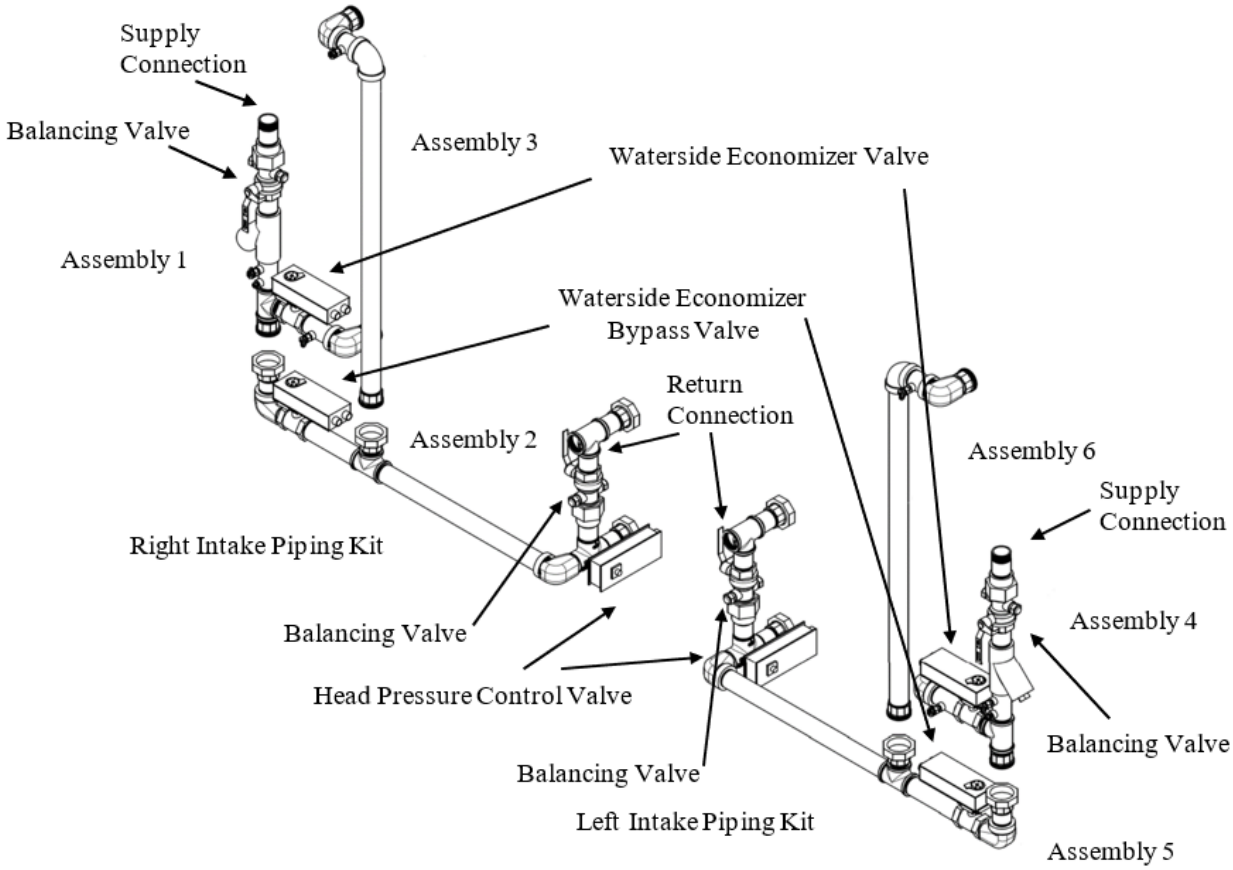

Figure 13: Air Conditioner Waterside Economizer Piping Kit

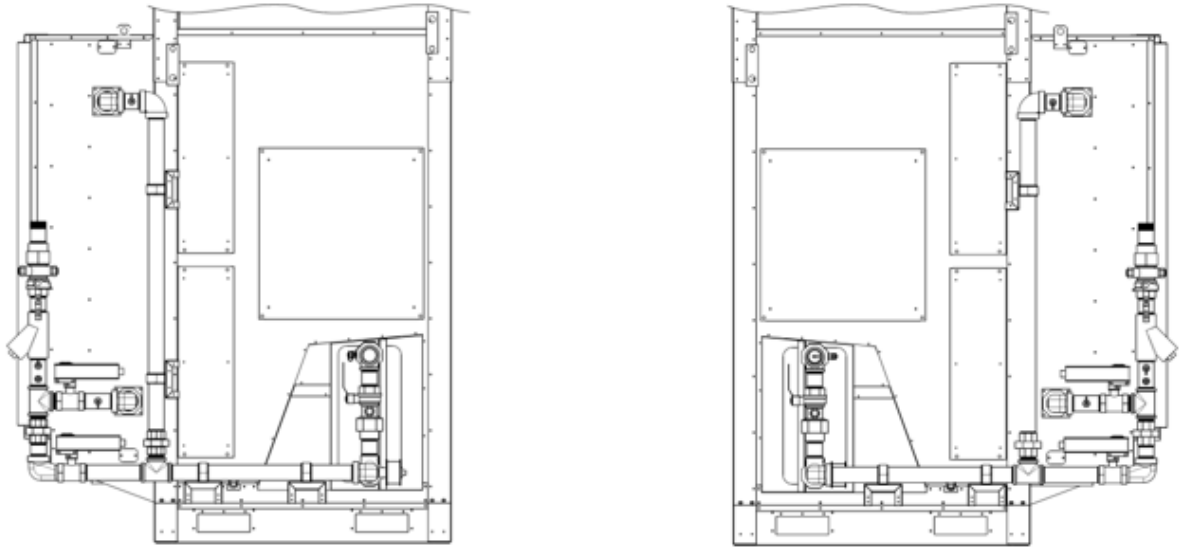

Figure 14: Air Conditioner Waterside Economizer Back View

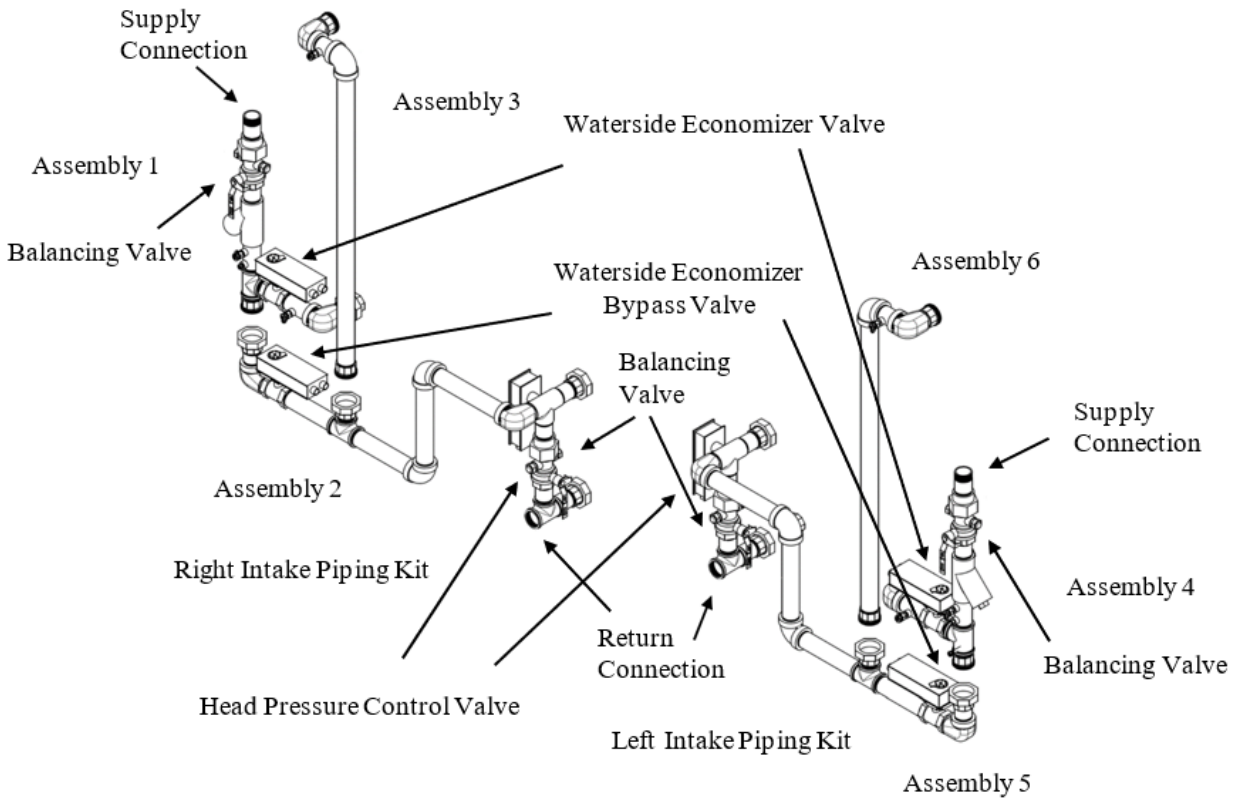

Figure 15: Water-Source Heat Pump Waterside Economizer Piping Kit

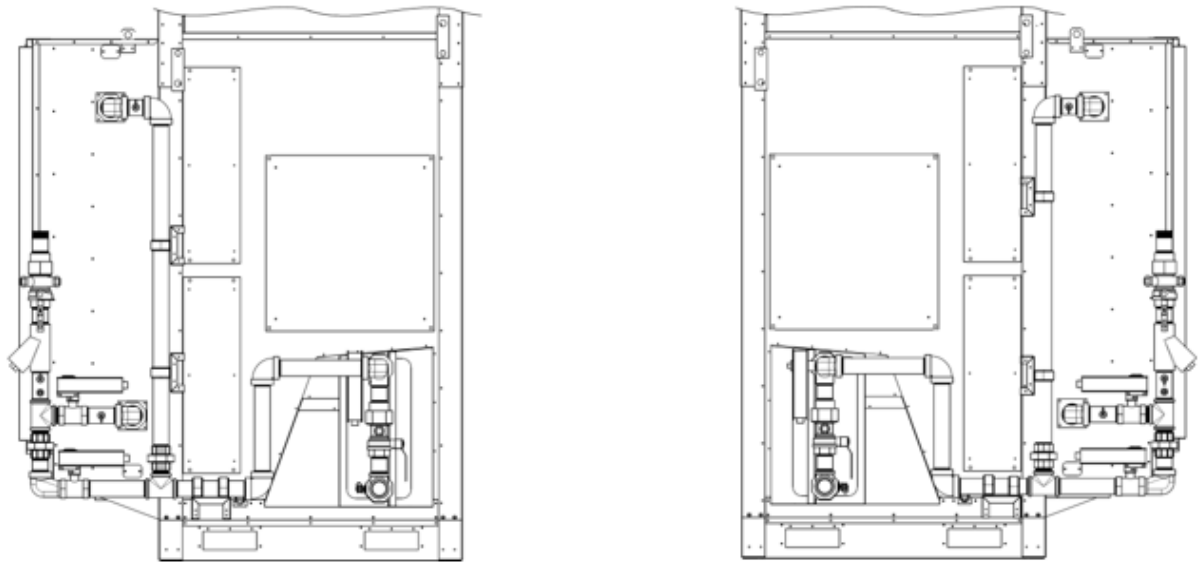

Figure 16: Water-Source Heat Pump Waterside Economizer Back View

5.9. Hot Water Coil

Factory installed one or two-row hot water heating coils can be factory mounted. These coils are supplied from a hot water source through separate piping from the condenser water source. All controls for heating operation are field supplied and field installed.

Always connect the supply to the top of the coil and the return to the bottom. Water coils should not be subjected to entering air temperatures below 3.3° (38°F) to prevent coil freeze-up. If the air temperature across the coil is going to be below this value, use a glycol solution to match the coldest air expected.

5.10. Chilled Water Coil

Factory installed four or six row chilled water cooling coils can be factory mounted. These coils are supplied from a chilled water source through separate piping from the condenser water source. All controls for the cooling coil are field supplied and field installed. Connect the chilled water supply to the bottom of the coil and return it to the top.

Water supply lines must be insulated with closed-cell type pipe insulation or insulation that includes a vapor barrier. Lines must be properly fastened, drained, and supported according to local code requirements and job specifications.

Table 14: Min and Max Water Pressure and Temps

	Chilled Water	Hot Water
Min Entering Air	15.6°C (60°F)	4.4 °C (40°F)
Max Entering Air	37.8°C (100°F)	26.7°C (80°F)
Min Entering Water	1.7°C (35°F)	60°C (140°F)
Max Entering Water	18.3°C (65°F)	93.3°C (200°F)
Min Water Pressure	0 kPa (15 psig)	
Max Water Pressure	2068 kPa (300 psig)	

This Page Intentionally Left Blank

6. STARTUP

(See back of the manual for startup form)

WARNING

Piping shall be in accordance with national and local codes. Pressure limiting devices, backflow preventers, and all other safety requirements are the sole responsibility of the installing contractor.

WARNING

Improper installation, adjustment, alteration, service, or maintenance can cause property damage, personal injury, or loss of life. Startup and service must be performed by a Factory Trained Service Technician. A copy of this IOM should be kept with the unit.

During startup, it is necessary to perform routine checks on the performance of the unit. This includes checking the air flow, the air filters, the condenser water flow, and refrigerant charge.

6.1.1. Filters

Do not operate the unit without filters in place. Operation of the equipment without filters in place can result in clogged coils. Units are shipped with the selected filters installed. If filters have been removed during installation, open the filter access door and reinstall the correct filters with the airflow indicator arrows pointing in the direction of airflow.

Check filters after a few days of operation, after the unit has been started up, as dust and debris from construction may cause premature filter loading. Replace the filters if necessary.

6.2. Supply Fans

SA Series units are equipped with direct drive backward curved plenum supply fan assemblies that deliver the air volume specified according to unit size and job requirements.

6.3. Fan Set Screw Adjustment

For single set screw applications, tighten the set screw to the required torque setting (Table 14) using a calibrated torque wrench. For double set screw applications, tighten one set screw to half of the required torque setting (Table 14) using a calibrated torque wrench. Tighten the second set screw to the full required torque setting, then tighten the first set screw to the full required torque setting.

Table 15: Plenum Fan Set Screw Specifications

Set Screw Diameter	Torque (Nm [In-Lbs])
6.4 mm (1/4")	9 [80]
7.9 mm (5/16")	14.2 [126]
9.5 mm (3/8")	27.12 [240]

The gap tolerances that are allowed between the blower and the inlet cone for the plenum fan blowers are shown in Figure 17. The inlet cone can be moved as necessary to center the cone in relation to the blower. The blower can be moved on the motor shaft to set the correct overlap. These tolerances are critical to the performance of the blower.

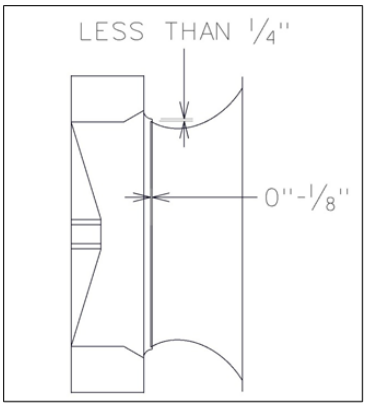

Figure 17: Plenum Fan Gap Tolerances

6.3.1. Supply Fan Spring Isolator Adjustment

CAUTION

Failure to adjust the blower isolation springs may cause premature failure of the blower bulkhead and/or blower assembly. These damages will not be covered by warranty. Blower isolation springs must be adjusted by the installing contractors prior to unit start-up. Springs must be adjusted such that the blower assembly is “free floating” and “level”.

Fan assemblies are equipped with spring isolators in the fan section for vibration attenuation.

Prior to shipment, ensure that the isolators are set in the lock down position to protect the unit during transit. It is important that all of the isolators are adjusted out of the shipping position and the shipping material is discarded before the unit is put into operation.

Remove all six screws from each shipping bracket and discard brackets.

On all four isolators, secure the adjustment bolt and rotate the locking nut counterclockwise approximately four full rotations. This will allow the locking nut to spin when the adjustment bolt is turned (See Figure 17).

Turn the adjustment bolt counterclockwise to adjust all four isolators until 3/4 inch clearance is obtained between all spring brackets and spring supports.

Check all isolators to ensure that the spring, spring cap and spring baseplate are aligned. The position of the spring cap should be adjusted such that the spring is straight up and down.

Adjustments can be made by applying horizontal pressure to the locking nut.

Individually tighten all four locking nuts while the adjustment bolts are held in position.

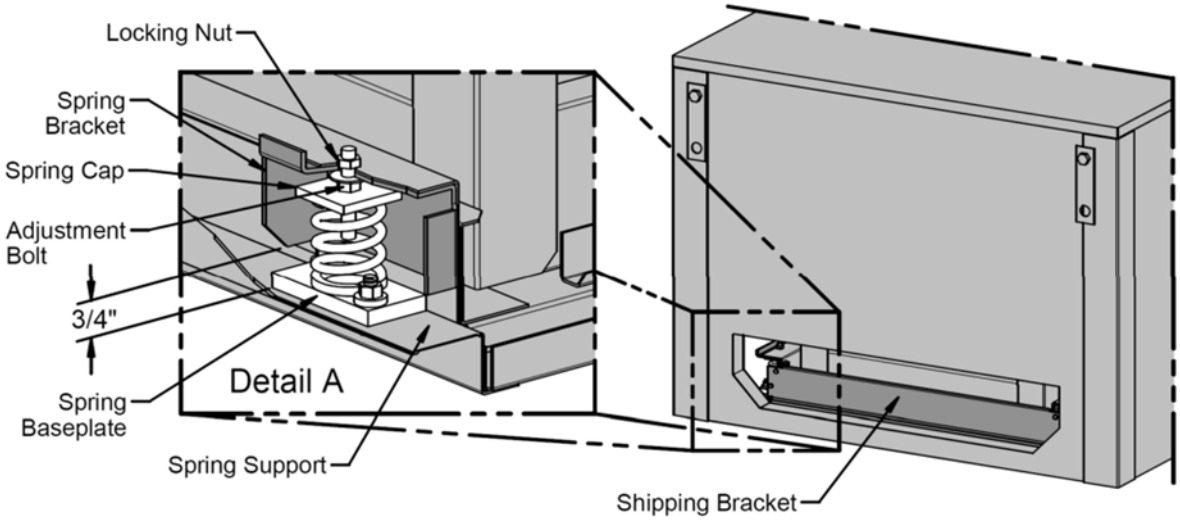

Figure 18: Spring Location

6.3.2. Supply Fan Removal

WARNING

Disconnect all electrical power sources before servicing the unit. More than one power source may be provided. Failure to do so may result in injury or death from electrical shock or entanglement in moving parts.

1. Disconnect all electrical power sources to the unit.
2. Disconnect the supply fans using the quick connect electrical harness located in the control compartment.
3. Remove the three screws on the hold down bracket on the front side of the fan assembly frame.
4. Remove the back fan access panel, and then remove the three screws on the rear side of the fan assembly frame.
5. Slide the complete fan assembly forward through the front supply fan access door.

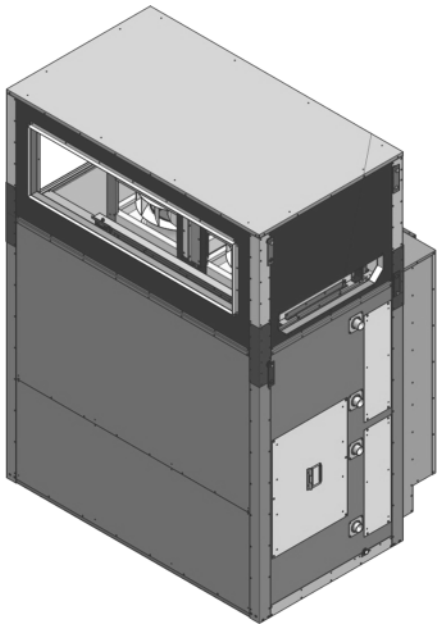

Figure 19: Back View with Supply Fan Access Pan Removed

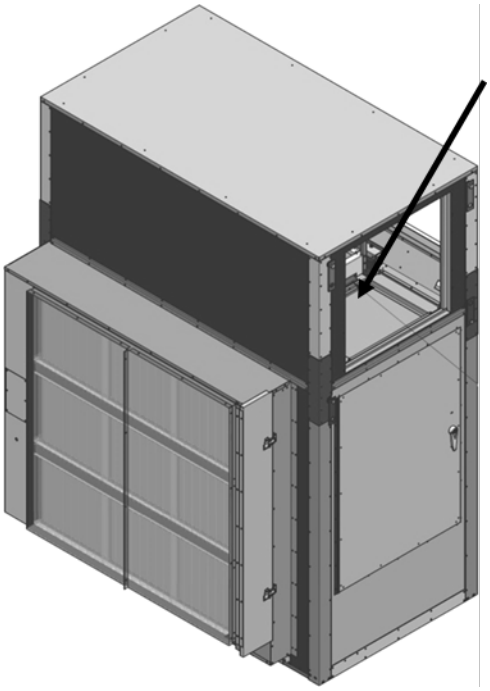

Figure 20: Front View with Supply Fan Access Door Open

6.3.3. Fan Airflow Adjustment

A specific air volume is delivered by the fans with air volume bands in the blower wheels or with VFDs. Field airflow adjustment may be required at startup.

Air volume bands for the wheels are sized according to the unit's air delivery specifications and can also be ordered from the factory for field installation. Wheels come standard with a 10% air volume band, as a safety factor, in case additional air volume is required from the unit.

Adjustment

If reduced air volume is required, an air volume band or larger air volume band can be installed within the blower wheel to reduce the amount of air delivered by the wheel.

If the unit is factory equipped with an air volume band and additional air volume is required, the band can be removed from the wheel.

Use the fan EES calculator in AAON Ecat6 to determine the new band size for the required cfm and static pressure.

The following photos of a wheel are provided for practical guidelines only in order to identify the air band location in the wheel. Actual field installation of the air band into the wheel will require access into and through the blower wheel venture, which may require removal of the blower motor and wheel.

Air volume bands are made of aluminum, sized, and equipped with easy-bend tabs that are to be inserted into pre-punched slots provided on the wheel. Once the band has been inserted into the slots, it MUST BE secured by bending the tabs over from the back side of the wheel, and also MUST BE secured from the inside by connecting the ends together with a pop-rivet in the holes provided on the ends of the band.

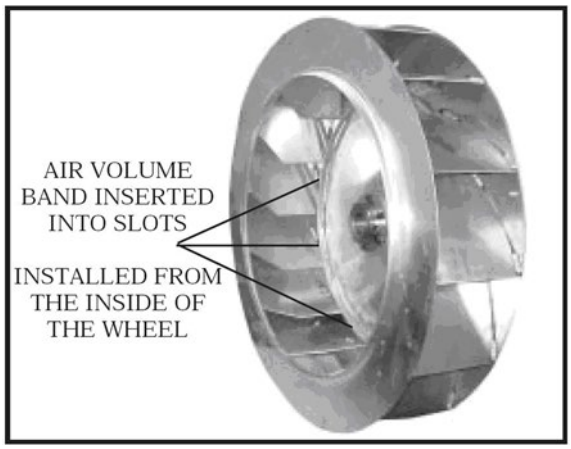

Figure 21: Blower Wheel with Band

If the band is field installed, a hand-held pop-rivet tool is recommended for connecting the band ends together. Caution must be taken to ensure that the band is tightly installed and that no damage, denting, or alteration to the wheel or blades occurs during the installation.

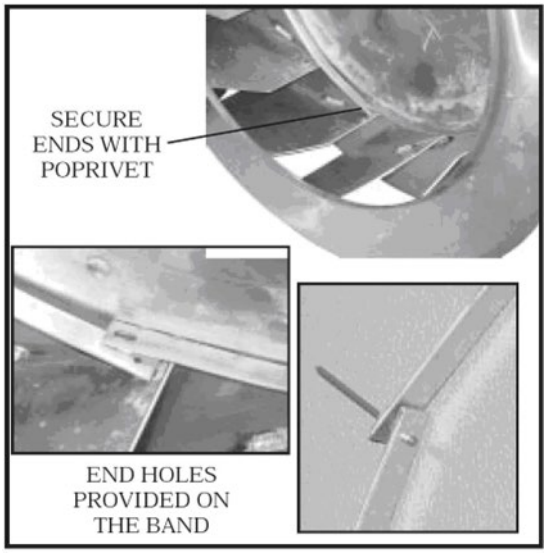

Figure 22: Securing the Band

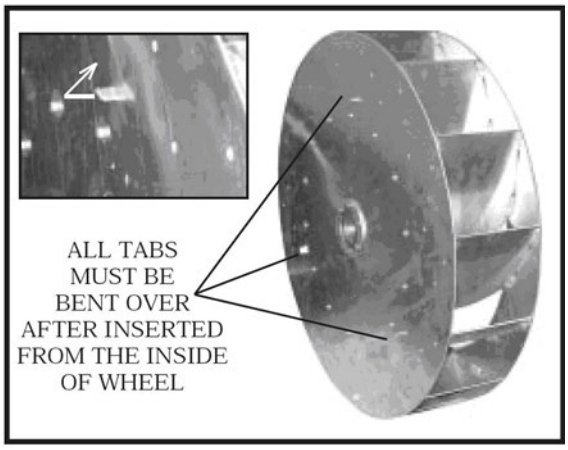

Figure 23: Band Tabs

Figure 24: Blower Wheel

CAUTION

Before completing startup and leaving the unit, a complete operating cycle should be observed to verify that all components are functioning properly.

6.4. Adjusting Refrigerant Charge

Adjusting the charge of a system in the field must be based on the determination of liquid sub-cooling and evaporator superheat. On a system with a TXV, liquid sub-cooling is more representative of the charge than evaporator superheat, but both measurements must be taken.

6.4.1. Before Charging

The unit being charged must be at or near full load conditions before adjusting the charge.

Units equipped with hot gas reheat must be charged with the hot gas reheat valves closed while the unit is in cooling mode to get the proper charge. After charging, the unit should be operated in reheat (dehumidification) mode to check for correct operation.

Units equipped with heat pump options should be charged in heating mode to get the proper charge. After charging, the unit should be operated in cooling mode to check for the correct charge. The charge may need to be adjusted for the cooling mode. If adjustments are made in the cooling mode, the heating mode must be rerun to verify proper operation.

After adding or removing a charge, the system must be allowed to stabilize, typically 10-15 minutes, before making any other adjustments.

CAUTION

The Clean Air Act of 1990 bans the intentional venting of refrigerant (CFCs and HCFCs) as of July 1, 1992. Approved methods of recovery, recycling, or reclaiming must be followed. Fines and/or incarceration may be levied for non-compliance.

The type of unit and options determine the ranges for liquid sub-cooling and evaporator superheat. Refer to the tables below when determining the proper sub-cooling.

6.4.2. Checking Liquid Sub-Cooling

Measure the temperature of the liquid line as it leaves the condenser.

Read the gauge pressure at the liquid line close to the point where the temperature was taken. You must use liquid line pressure, as it will vary from discharge pressure due to the condenser pressure drop.

Convert the pressure obtained to a saturated temperature using the appropriate refrigerant temperature-pressure chart.

Subtract the measured liquid line temperature from the saturated temperature to determine the liquid sub-cooling.

Compare the calculated sub-cooling to the table below for the appropriate unit type and options.

6.4.3. Checking Evaporator Superheat

Measure the temperature of the suction line close to the compressor.

Read the gauge pressure at the suction line close to the compressor.

Convert the pressure obtained to a saturated temperature using the appropriate refrigerant temperature-pressure chart.

Subtract the saturated temperature from the measured suction line temperature to determine the evaporator superheat.

Compare the calculated superheat to the table below for the appropriate unit type and option.

CAUTION

Do Not Overcharge!
Refrigerant overcharging leads to excess refrigerant in the condenser coils, resulting in elevated compressor discharge pressure. The maximum allowable charge is 16.3 kg (575 oz).

Table 16: Acceptable Fin & Tube Air-Cooled Condenser Coil Refrigeration Circuit Values (Metric)

Air-Cooled Cond./Air-Source Heat Pump in Cooling Mode	
Sub-Cooling	4.4-8.3°C / 1.1-2.2°C (HP)*
Sub-Cooling with Hot Gas Reheat	4.4-8.3°C / 1.1-3.3°C (HP)*
Superheat	4.4-8.3°C

Table 17: Acceptable Fin & Tube Air-Cooled Condenser Coil Refrigeration Circuit Values (Imperial)

Air-Cooled Cond./Air-Source Heat Pump in Cooling Mode	
Sub-Cooling	8-15°F / 2-4°F (HP)*
Sub-Cooling with Hot Gas Reheat	8-15°F / 2-6°F (HP)*
Superheat	8-15°F

Table 18: Acceptable Water-Cooled Refrigeration Circuit Values (Metric)

Water-Cooled Cond./Water Source Heat Pump in Cooling Mode	
Sub-Cooling	4.4-8.3°C / 1.1-2.2°C (HP)*
Superheat	4.4-8.3°C

Table 19: Acceptable Water-Cooled Refrigeration Circuit Values (Imperial)

Water-Cooled Cond./Water Source Heat Pump in Cooling Mode	
Sub-Cooling	4-8°F
Superheat	8-15°F

Table 20: Acceptable Microchannel Air-Cooled Condenser Coil Liquid Sub-Cooling Values (Metric)

Cooling Mode Liquid Sub-Cooling Values (°C)					
Ambient (°C)	Evaporator Coil Saturation Temperature (°C)				
	4.4	7.2	8.9	10.0	12.8
19.4	5.0 - 7.8	4.4 - 7.2	4.4 - 7.2	3.9 - 6.7	2.8 - 5.6
22.2	5.6 - 8.3	5.0 - 7.8	5.0 - 7.8	4.4 - 7.2	3.9 - 6.7
27.8	5.6 - 8.3	5.6 - 8.3	5.6 - 8.3	5.0 - 7.8	3.9 - 6.7
35.0	5.6 - 8.3	5.6 - 8.3	5.6 - 8.3	5.0 - 7.8	4.4 - 7.2
40.6	6.1 - 8.9	6.1 - 8.9	5.6 - 8.3	5.6 - 8.3	4.4 - 7.2
46.1	5.6 - 8.3	6.1 - 8.9	6.1 - 8.9	6.1 - 8.9	5.0 - 7.8

Table 21: Acceptable Microchannel Air-Cooled Condenser Coil Liquid Sub-Cooling Values (Imperial)

Cooling Mode Liquid Sub-Cooling Values (°F)					
Ambient (°F)	Evaporator Coil Saturation Temperature (°F)				
	40	45	48	50	55
67	9 - 14	8 - 13	8 - 13	7 - 12	5 - 10
72	10 - 15	9 - 14	9 - 14	8 - 13	7 - 12
82	10 - 15	10 - 15	10 - 15	9 - 14	7 - 12
95	10 - 15	10 - 15	10 - 15	9 - 14	8 - 13
105	11 - 16	11 - 16	10 - 15	10 - 15	8 - 13
115	10 - 15	11 - 16	11 - 16	11 - 16	9 - 14

Note:

1. Microchannel condenser coils are more sensitive to charge. The system must be running in cooling mode with compressor, supply airflow & condenser fan speed at full load. The sub-cooling value changes depending on the ambient temperature reading and the microchannel evaporator coil saturation temperature. To find the correct sub-cooling value, find the ambient temperature on the first column and follow that across to the SST (4.4-12.8°C [40-55°F]).

2. Superheat for Microchannel condenser coils must be between 4.4 and 8.3°C (8 - 15°F)

6.4.4. Adjusting Sub-Cooling and Superheat Temperatures

The system is overcharged if the sub-cooling at fully loaded conditions exceeds the range listed in the table above (low loads on the evaporator result in increased sub-cooling) and the evaporator superheat is within the temperature range as shown in the table above (high superheat results in increased sub-cooling).

Correct an overcharged system by reducing the amount of refrigerant in the system to lower the sub-cooling.

The system is undercharged if the superheat is too high and the sub-cooling is too low.

Correct an undercharged system by adding refrigerant to the system to reduce superheat and raise sub-cooling.

If the sub-cooling is correct and the superheat is too high, the TXV may need adjustment to correct the superheat.

Table 22: Minimum Room Area for Charging a Unit

Charge of Largest Circuit in kg (oz)		Min Circulation Airflow in m^3/hr (CFM)		Minimum Room Area in m^2 (ft^2)						Floor area for unventilated storage	
				1.8 m (6 ft) ceiling/release height		3 m (10 ft) ceiling/release height		3.7 m (12 ft) ceiling/release height			
5.7	200	**575**	338	**21**	229	**13**	137	**10**	111	**22**	240
6.1	216	**621**	365	**23**	247	**14**	148	**11**	120	**26**	280
6.6	232	**667**	392	**25**	266	**15**	159	**12**	129	**30**	323
7.0	248	**713**	419	**26**	284	**16**	170	**13**	138	**34**	369
7.5	264	**759**	446	**28**	302	**17**	181	**14**	147	**39**	418
7.9	280	**805**	474	**30**	321	**18**	192	**14**	156	**44**	470
8.4	296	**850**	501	**31**	339	**19**	203	**15**	165	**49**	526
8.8	312	**896**	528	**33**	357	**20**	214	**16**	174	**54**	584
9.3	328	**942**	555	**35**	376	**21**	225	**17**	183	**60**	645
9.8	344	**988**	582	**37**	394	**22**	236	**18**	192	**66**	710
10.2	360	**1034**	609	**38**	412	**23**	247	**19**	201	**72**	778
10.7	376	**1080**	636	**40**	431	**24**	258	**19**	210	**79**	848
11.1	392	**1126**	663	**42**	449	**25**	269	**20**	218	**86**	922
11.6	408	**1172**	690	**43**	467	**26**	280	**21**	227	**93**	999
12.0	424	**1218**	717	**45**	486	**27**	291	**22**	236	**100**	1079
12.5	440	**1264**	744	**47**	504	**28**	302	**23**	245	**108**	1161
12.9	456	**1310**	771	**49**	522	**29**	313	**24**	254	**116**	1247
13.4	472	**1356**	798	**50**	541	**30**	324	**24**	263	**124**	1337
13.8	488	**1402**	825	**52**	559	**31**	335	**25**	272	**133**	1429
14.3	504	**1448**	852	**54**	577	**32**	346	**26**	281	**142**	1524
14.7	520	**1494**	879	**55**	596	**33**	357	**27**	290	**151**	1622
15.2	536	**1540**	906	**57**	614	**34**	368	**28**	299	**160**	1724
15.6	552	**1586**	934	**59**	632	**35**	379	**29**	308	**170**	1828
16.1	568	**1632**	961	**60**	651	**36**	390	**29**	317	**180**	1936
16.3	575	**1652**	972	**61**	659	**37**	395	**30**	320	**184**	1984

Table 23: R-454B Refrigerant Temperature-Pressure Chart (Metric)

°C	KPA	°C	KPA	°C	KPA	°C	KPA	°C	KPA
-6.7	484.5	**8.3**	843.3	**23.3**	1348.0	**38.3**	2034.6	**53.3**	2946.9
-6.1	495.6	**8.9**	859.3	**23.9**	1370.0	**38.9**	2064.1	**53.9**	2985.7
-5.6	506.9	**9.4**	875.3	**24.4**	1392.2	**39.4**	2093.9	**54.4**	3024.9
-5.0	518.2	**10.0**	891.6	**25.0**	1414.6	**40.0**	2123.9	**55.0**	3064.5
-4.4	529.7	**10.6**	908.1	**25.6**	1437.3	**40.6**	2154.3	**55.6**	3104.5
-3.9	541.5	**11.1**	924.8	**26.1**	1460.3	**41.1**	2185.0	**56.1**	3144.9
-3.3	553.3	**11.7**	941.7	**26.7**	1483.5	**41.7**	2216.1	**56.7**	3185.8
-2.8	565.4	**12.2**	958.8	**27.2**	1507.0	**42.2**	2247.4	**57.2**	3227.0
-2.2	577.6	**12.8**	976.2	**27.8**	1530.8	**42.8**	2279.1	**57.8**	3268.6
-1.7	589.9	**13.3**	993.7	**28.3**	1554.8	**43.3**	2311.1	**58.3**	3310.7
-1.1	602.5	**13.9**	1011.5	**28.9**	1579.0	**43.9**	2343.5	**58.9**	3353.2
-0.6	615.2	**14.4**	1029.4	**29.4**	1603.6	**44.4**	2376.2	**59.4**	3396.1
0.0	628.1	**15.0**	1047.6	**30.0**	1628.4	**45.0**	2409.2	**60.0**	3439.5
0.6	641.2	**15.6**	1066.0	**30.6**	1653.5	**45.6**	2442.6	**60.6**	3483.3
1.1	654.4	**16.1**	1084.7	**31.1**	1678.8	**46.1**	2476.2	**61.1**	3527.6
1.7	667.8	**16.7**	1103.5	**31.7**	1704.4	**46.7**	2510.3	**61.7**	3572.3
2.2	681.4	**17.2**	1122.6	**32.2**	1730.4	**47.2**	2544.7	**62.2**	3617.4
2.8	695.2	**17.8**	1141.9	**32.8**	1756.6	**47.8**	2579.4	**62.8**	3663.0
3.3	709.2	**18.3**	1161.5	**33.3**	1783.0	**48.3**	2614.5	**63.3**	3709.2
3.9	723.3	**18.9**	1181.3	**33.9**	1809.9	**48.9**	2650.0	**63.9**	3755.7
4.4	737.6	**19.4**	1201.3	**34.4**	1836.9	**49.4**	2685.7	**64.4**	3802.7
5.0	752.2	**20.0**	1221.5	**35.0**	1864.3	**50.0**	2721.9	**65.0**	3850.3
5.6	766.9	**20.6**	1242.0	**35.6**	1891.9	**50.6**	2758.5	**65.6**	3898.4
6.1	781.8	**21.1**	1262.8	**36.1**	1919.8	**51.1**	2795.4		
6.7	796.9	**21.7**	1283.7	**36.7**	1948.1	**51.7**	2832.7		
7.2	812.2	**22.2**	1304.9	**37.2**	1976.7	**52.2**	2870.4		
7.8	827.7	**22.8**	1326.3	**37.8**	2005.5	**52.8**	2908.4		

Table 24: R-454B Refrigerant Temperature-Pressure Chart (Imperial)

°F	PSIG	°F	PSIG	°F	PSIG	°F	PSIG	°F	PSIG
20	70.3	**47**	122.3	**74**	195.5	**101**	295.1	**128**	427.4
21	71.9	**48**	124.6	**75**	198.7	**102**	299.4	**129**	433.0
22	73.5	**49**	127.0	**76**	201.9	**103**	303.7	**130**	438.7
23	75.2	**50**	129.3	**77**	205.2	**104**	308.0	**131**	444.5
24	76.8	**51**	131.7	**78**	208.5	**105**	312.5	**132**	450.3
25	78.5	**52**	134.1	**79**	211.8	**106**	316.9	**133**	456.1
26	80.3	**53**	136.6	**80**	215.2	**107**	321.4	**134**	462.0
27	82.0	**54**	139.1	**81**	218.6	**108**	326.0	**135**	468.0
28	83.8	**55**	141.6	**82**	222.0	**109**	330.6	**136**	474.1
29	85.6	**56**	144.1	**83**	225.5	**110**	335.2	**137**	480.2
30	87.4	**57**	146.7	**84**	229.0	**111**	339.9	**138**	486.3
31	89.2	**58**	149.3	**85**	232.6	**112**	344.6	**139**	492.6
32	91.1	**59**	151.9	**86**	236.2	**113**	349.4	**140**	498.8
33	93.0	**60**	154.6	**87**	239.8	**114**	354.3	**141**	505.2
34	94.9	**61**	157.3	**88**	243.5	**115**	359.1	**142**	511.6
35	96.9	**62**	160.1	**89**	247.2	**116**	364.1	**143**	518.1
36	98.8	**63**	162.8	**90**	251.0	**117**	369.1	**144**	524.6
37	100.8	**64**	165.6	**91**	254.8	**118**	374.1	**145**	531.3
38	102.9	**65**	168.5	**92**	258.6	**119**	379.2	**146**	538.0
39	104.9	**66**	171.3	**93**	262.5	**120**	384.3	**147**	544.7
40	107.0	**67**	174.2	**94**	266.4	**121**	389.5	**148**	551.5
41	109.1	**68**	177.2	**95**	270.4	**122**	394.8	**149**	558.4
42	111.2	**69**	180.1	**96**	274.4	**123**	400.1	**150**	565.4
43	113.4	**70**	183.1	**97**	278.4	**124**	405.4		
44	115.6	**71**	186.2	**98**	282.5	**125**	410.8		
45	117.8	**72**	189.3	**99**	286.7	**126**	416.3		
46	120.0	**73**	192.4	**100**	290.9	**127**	421.8		

6.4.5. Freeze Stat Startup

Freeze Stat is an adjustable temperature sensor (-23.3 - 21.1°C [-10 to 70°F]) mounted on the tubing of the first cooling circuit and wired to de-energize all cooling circuits if tubing temperature falls below the setpoint. The option is used to prevent freezing of the evaporator coil.

Recommended Setting: 0 to 1.7°C (32 to 35°F)

This Page Intentionally Left Blank

7. OPERATION

Unit operations should be controlled with a thermostat or unit controller, never at the main power supply, except during an emergency or complete shutdown of the unit.

7.1. Refrigerant Detection System

Each unit is equipped with a Refrigerant Detection System (RDS) to detect leaked refrigerant within the conditioned airstream and in the cabinet. The RDS system consists of refrigerant detection sensors in the conditioned airstream and cabinet connected to a corresponding mitigation board. In the event of a refrigerant leak, the RDS sensors will send an alarm to the mitigation board. Each A2L mitigation board is equipped with an alarm output in the form of an NO/NC relay.

Applications using AAON VCC-X controls:

In the event of an airstream RDS alarm, the compressor operation is disabled, and the indoor blower is enabled to provide circulation airflow in accordance with UL 60335-2-40. In the event of a Cabinet or Gas Heat RDS alarm, compressor operation and gas heat operation is disabled. The indoor blower and any form of heat other than gas will resume normal operation. RDS alarm outputs are available via BACNet communication through the VCC-X controller.

For applications not using AAON VCC-X controls, mitigation board outputs will be wired to the low voltage terminal block.

In all cases, the mitigation board and VCCX-X board will remain in alarm state for five minutes after the RDS sensor has cleared the alarm below the concentration setpoint.

For VAV applications and applications utilizing zone dampers, the VAV boxes and zone dampers must be wired to the mitigation board output to open all VAV boxes and zone dampers to allow for the required circulation airflow to prevent stagnation of leaked refrigerant. Other applications requiring additional refrigerant leak mitigation measures, as required by local code and ASHRAE 15, may be notified of detected refrigerant by this alarm output.

Verify functionality of RDS by removing sensor connection at the mitigation board and ensuring that all sequences above take place, including the opening of VAV boxes and zone dampers, and additional mitigation procedures, if applicable. Refer to the A2L Mitigation Board Technical Guide for sensor location.

Smoke control procedures may override the RDS alarm functions.

CAUTION

Certain applications may allow the unit to bring in unconditioned air. Freeze protection needs to be considered in the final application.

CAUTION

Additional mitigation procedures or fault conditions initiated outside of AAON controls are the responsibility of the Building Engineer and must give appropriate priority in accordance with local codes.

7.2. Steam or Hot Water Preheating Operation

Valve control for the steam and hot water heating coils are by others. Heating is accomplished by passing steam or hot water through the steam or hot water coil assembly.

7.3. Chilled Water or Non-Compressorized DX Cooling Operation

Controls for chilled water-cooling coil and non-compressorized DX coil are by others.

7.4. Packaged DX Cooling Operation and Control

When a call for cooling (G and Y1, Y2, etc.) is made, the supply fan motors and compressors will energize.

WARNING

Compressor Cycling:

3 Minute Minimum Off Time - To prevent the motor from overheating, compressors must cycle off for a minimum of 3 minutes.

5 Minute Minimum on Time - To maintain the proper oil level, compressors must cycle on for a minimum of 5 minutes.

The cycle rate must not exceed 7 starts per hour.

8. MAINTENANCE

(See back of the manual for maintenance log.)

At least once each year, a qualified service technician should check out the unit. Supply fans, evaporator coils, and air filters should be inspected monthly.

WARNING

Before performing work that can result in the release of a flammable refrigerant, inspect the area to ensure it is free of any potential ignition sources. "No Smoking" signs should be displayed while working.

WARNING

Improper installation, adjustment, alteration, service, or maintenance can cause property damage, personal injury, or loss of life. A Factory Trained Service Technician must perform startup and service. A copy of this IOM should be kept with the unit.

Periodically during operation, it is necessary to perform routine service checks on the performance of the unit. This includes checking the air flow, the air filters, the condenser water flow, and the refrigerant charge.

See the Startup section for information on air flow adjustment and refrigerant charge adjustment.

8.1. DX Cooling

Set unit controls to cooling mode of operation with supply fans on. Check the fans for correct operating direction, amperage, and voltage. Check compressor operation, rotation, amperage, and voltage to the unit nameplate (check the amperage on the load side of the compressor contactor).

8.1.1. Refrigerant Removal and Evacuation

If removal of refrigerant is required for any maintenance or servicing, conventional procedures must be used, and the removal of refrigerant must be in accordance with local and national regulations.

Safety precautions must be taken prior to beginning work to ensure that the risk of fire due to flammable refrigerants is minimized. Work is to be undertaken under a controlled procedure to reduce the amount of refrigerant vapor present while work is being performed. All maintenance staff and others working in the area are to be instructed on the nature of work being performed. Care should be taken to ensure that working in a confined space is avoided.

Check the area with a refrigerant detector suitable for use with the refrigerant prior to and during work in order to be aware of a potential flammable environment. Keep a dry powder or CO_2 fire extinguisher nearby if any hot work is being performed.

Ensure that the work area is sufficiently ventilated before breaking into the system. Ventilation must continue throughout all of the work. Ensure that ventilation safely removes flammable refrigerant to an area that will adequately disperse refrigerant to avoid concentration above flammable levels.

Refrigerant must be recovered into the correct recovery cylinders in accordance with local and national regulations. Recovery cylinders must be labeled properly. Ensure that the correct number of cylinders are available for holding the entire charge of the system. Cylinders must have pressure relief and shut-off valves that are in proper working order. Fully evacuate the recovery cylinder before use.

The recovery equipment must be in good working order, with a set of instructions concerning the equipment that is at hand. Ensure that the equipment is suitable for the recovery of flammable refrigerant used. If in doubt, the manufacturer should be consulted. In addition, a set of calibrated weighing scales must be available and in good working order. Ensure hoses are complete with leak-free disconnect couplings and in good condition.

When removing refrigerant in order to open system, evacuate the system, and flush or purge the system continuously with an inert gas when using a flame to open the circuit.

The system must be purged with oxygen-free nitrogen to render the appliance safe for flammable refrigerant. Compressed air or oxygen must not be used. When pulling a vacuum, ensure that the outlet of the vacuum pump is not near any potential ignition source and in a well-ventilated area.

The recovered refrigerant is to be processed according to local legislation in the correct recovery cylinder, and with the relevant waste transfer note arranged. Do not mix refrigerants in recovery units, and especially not in cylinders.

If compressors or compressor oils are to be removed, ensure that they have been evacuated to an acceptable level to make certain that flammable refrigerant does not remain within the lubricant. Do not heat the compressor body by using an open flame or other ignition sources to accelerate this process. Remove any drained oil safely.

8.2. Condensate Drain Pans

Drain pans will have moisture present and require periodic cleaning to prevent microbial growth. Cleaning of the drain pans will also prevent any possible plugging of the drain lines and overflow of the pan itself. Cleaning of the drain pans and inside of the unit should be done only by qualified personnel.

8.3. E-Coated Coil Cleaning

Documented quarterly cleaning of e-coated coils is required to maintain coating warranty coverage.

WARNING

Electric shock hazard. Shut off all electrical power to the unit to avoid shock hazard or injury from rotating parts.

Surface loaded fibers or dirt should be removed prior to the water rinse to prevent restriction of airflow. If unable to backwash the side of the coil opposite the coil's entering air side, then surface loaded fibers or dirt should be removed with a vacuum cleaner. If a vacuum cleaner is not available, a soft, non-metallic bristle brush may be used. In either case, the tool should be applied in the direction of the fins. Coil surfaces can be easily damaged (fin edges bent over) if the tool is applied across the fins.

Use of a water stream, such as a garden hose, against a surface loaded coil will drive the fibers, dirt, and salts into the coil. This will make cleaning efforts more difficult. Surface loaded fibers must be completely removed prior to using a low velocity clean water rinse.

Quarterly cleaning is required to maintain warranty coverage and is essential to maintain the life of an E-coated coil. Coil cleaning should be part of the unit's regularly scheduled maintenance procedures.

Failure to clean an E-coated coil on the prescribed quarterly cycle will void the warranty and may result in reduced efficiency and durability in the environment.

A routine two-step quarterly coil cleaning is required to maintain the warranty.

Step one is to clean the coil with the below approved coil cleaner (see approved products list under the "Recommended Coil Cleaners" section.

Step two is to use the approved salt/chloride remover under the "Recommended Chloride Remover" section to dissolve soluble salts and revitalize the unit. It is very important when cleaning and/or rinsing not to exceed 54.4°C (130°F) and potable water pressure is less than 689.5 kPa (100 psig) to avoid damaging the unit and coil fin edges.

Failure to clean an E-coated coil will void the warranty and may result in reduced efficiency and durability.

CAUTION

High velocity water from a pressure washer or compressed air should only be used at a very low pressure to prevent fin and/or coil damage. The force of the water or air jet may bend the fin edges and increase the airside pressure drop. Reduced unit performance or nuisance unit shutdowns may occur.

For routine quarterly cleaning, first clean the coil with the approved coil cleaners below. After cleaning the coils with the approved cleaning agent, use the approved chloride remover to remove soluble salts and revitalize the unit.

8.3.1. Recommended Coil Cleaner-Step 1

GulfCoat™ Coil Cleaner, assuming it is used in accordance with the manufacturer's directions on the container for proper mixing and cleaning, has been approved for use on E-coated coils to remove mold, mildew, dust, soot, greasy residue, lint, and other particulate. Never use any cleaners that are not approved.

8.3.2. Recommended Chloride Remover-Step 2

CHLOR*RID® Concentrate, assuming it is used in accordance with the manufacturer's directions on the container for proper mixing, has been approved for use on E-coated coils to remove chlorides/salts & sulfates. Never use any chloride removers that are not approved.

8.3.3. Warranty Protection-Step 1

Complete the coil cleaning following these steps:

1. Ensure that the power to the unit is off and locked out.
2. Clean the area around the unit if needed to ensure leaves, grass, or loose debris will not be blown into the coil.
3. Remove panels or tops as required to gain access to the coil(s) to be cleaned.
4. Using a pump up sprayer, fill to the appropriate level with potable water and add the correct amount of approved cleaner as per the manufacturer's instructions, leaving room for the pump plunger to be reinserted.

Note: Coils should always be cleaned/back flushed opposite to the airflow to prevent impacting the dirt into the coil.

If the coils have heavy dirt, fibers, grass, leaves, etc. on the interior or exterior face areas, a vacuum and brush should be used to remove those surface contaminants prior to applying cleaner. The interior floor, drain tray, or pan areas should also be vacuumed.

5. Apply the mixed cleaner to coil surfaces using a pressurized pump up sprayer, maintaining a good rate of pressure and at a medium size nozzle spray, (not a solid stream and not a wide fan but somewhere in the middle). Work in sections/panels, ensuring that all areas are covered and kept wet.
6. Apply the cleaner to the unit interior air exiting side coil surfaces first. Work in sections/panels, moving side to side and from top to bottom.
7. Generously soak coils by spraying cleaner directly on and into the fin pack section to be cleaned and allow the cleaning solution to soak for 5 to 10 minutes.
8. Using pressurized potable water (<689.5 kPa [<100 psi]), rinse the coils and continue to always work in sections/panels. Start at the top of the coil and slowly move vertically downward to the bottom. Then, staying in the same vertical area, slowly move back up to the top where you started. Now move over slightly, overlapping the area just completed, and repeat the above. Continue until all coil areas on the inside of the unit have been rinsed.
9. Complete steps 5-9 for the exterior air entering side of the coils.
10. Final rinse - Now complete a quick rinse of both sides of the coil, including the headers, piping, u-bends, and hairpins.

CAUTION

Harsh chemicals, household bleach, or acid cleaners should not be used to clean outdoor or indoor e-coated coils. These cleaners can be very difficult to rinse out of the coil and can accelerate corrosion and attack the E-coating. If there is dirt below the surface of the coil, use the recommended coil cleaners.

11. If the coil has a drain pan or unit floor that is holding rinse water or cleaner, extra time and attention will need to be taken in those areas to ensure a proper rinse has been completed.

8.3.4. Warranty Protection-Step 2

Complete the coil chloride (salt) removal following these steps:

1. CHLOR*RID® is a concentrate to be used for both normal inland applications at a 100:1 mix ratio OR for severe coastal applications 50:1 mix ratio with potable water (2.56 ounces of Chlor*rid to 1 gal of water). Using a pump up sprayer, fill to the appropriate level with potable water and add the correct amount of CHLOR*RID® salt remover, leaving room for the pump plunger to be reinserted.
2. Apply CHLOR*RID® to all external coil surfaces using a pressurized pump up sprayer, maintaining a good rate of pressure and at a medium size nozzle spray, (not a solid stream and not a wide fan, but somewhere in the middle). Work in sections/panels, ensuring that all areas are covered and kept wetted.
3. Generously soak coils by spraying CHLOR*RID® directly on and into the fin pack section. Let stand for 5 to 10 minutes, keeping the area wetted. Do not allow it to dry before rinsing.
4. Using pressurized potable water (<689.5 kPa [<100 psi]), rinse the CHLOR*RID® and dissolved chlorides/salts off of the coils, continuing to always work in sections/panels.
5. Starting at the top of the coil, begin rinsing the coil from side to side until you reach the bottom. Repeat as many times as is necessary to ensure all coil sections/panels have been completed and are thoroughly rinsed.
6. Reinstall all panels and tops that were removed.

8.4. Supply Fans

CAUTION

Blower wheels and bands must be inspected for excessive dust buildup periodically and cleaned if required. Excessive dust buildup on blower wheels may cause an unbalanced state, leading to vibration and/or component failure. Damages due to excessive dust buildup will not be covered under the factory warranty.

WARNING

Electric shock hazard. Shut off all electrical power to the unit to avoid shock hazard or injury from rotating parts.

8.4.1. Lubrication

All original blower motors and bearings are furnished with factory lubrication. Some applications will require that bearings be re-lubricated periodically. The schedule will depend on the operating duty, temperature variations, or other severe atmospheric conditions.

Bearings should be re-lubricated when at normal operating temperatures, but not running. Rotate the fan shaft by hand and add only enough grease to purge the seals. DO NOT OVERLUBRICATE.

Recommended greases are:

SHELL OIL - DOLIUM R
CHEVRON OIL - SRI No. 2
TEXACO INC. - PREMIUM R.

8.5. Phase and Brownout Protection Module

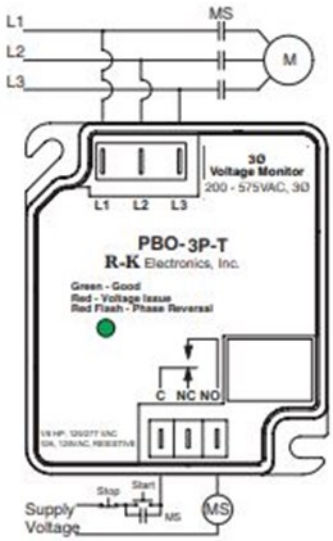

Figure 25: Phase and Brownout Protection Module

The PBO-3P-T monitors line voltages from 200VAC to 575VAC 3 Φ. The PBO-3P-T must be wired according to unit specific wiring diagram included in the control compartment. Output relay will be de-energized after the trip.

8.6. Filter Replacement

Monthly filter inspection is required to maintain optimum unit efficiency.

WARNING

Electric shock hazard. Shut off all electrical power to the unit to avoid shock hazard or injury from rotating parts.

It is strongly recommended that filter media be replaced monthly. Filters are located upstream of the evaporator coil. Open access panel and pull filters straight out to inspect all of the filters. Replace filters with the size indicated on each filter or as shown in the tables below. Arrow on the replacement filters must point towards the blower.

Table 25: 23-25 tons, Pre Filters

Feature 6A	Qty. Size (cm) [in.]	Type
0	No Pre Filters	
A	(9) 50.8 x 50.8 x 5.1 [20 x 20 x 2]	Pleated MERV 8

Table 26: 45-70 tons, Pre Filters

Feature 6A	Qty. Size (cm) [in.]	Type
0	No Pre Filters	
A	(18) 50.8 x 50.8 x 5.1 [20 x 20 x 2]	Pleated MERV 8

Table 27: 23-25 tons, Unit Filters

Feature 6B	Qty. Size (cm) [in.]	Type
0	(9) 50.8 x 50.8 x 5.1 [20 x 20 x 2]	Pleated MERV 8
A	(9) 50.8 x 50.8 x 10.2 [20 x 20 x 4]	Pleated MERV 8
B	(9) 50.8 x 50.8 x 10.2 [20 x 20 x 4]	Pleated MERV 11
C	(9) 50.8 x 50.8 x 10.2 [20 x 20 x 4]	Pleated MERV 13
D	(9) 50.8 x 50.8 x 10.2 [20 x 20 x 4]	Pleated MERV 14

Table 28: 45–70 tons, Unit Filters

Feature 6B	Qty. Size (cm) [in.]	Type
0	(18) 50.8 x 50.8 x 5.1 [20 x 20 x 2]	Pleated MERV 8
A	(18) 50.8 x 50.8 x 10.2 [20 x 20 x 4]	Pleated MERV 8
B	(18) 50.8 x 50.8 x 10.2 [20 x 20 x 4]	Pleated MERV 11
C	(18) 50.8 x 50.8 x 10.2 [20 x 20 x 4]	Pleated MERV 13
D	(18) 50.8 x 50.8 x 10.2 [20 x 20 x 4]	Pleated MERV 14

8.7. Replacement Parts

Parts for AAON equipment may be obtained from your local AAON representative. Reference the unit serial number and part number when ordering parts.

AAON Warranty, Service, and Parts Department

2424 S. Yukon Ave.
Tulsa, OK 74107
Ph: 918-382-6450
Fax: 918-382-6364
www.aaon.com

Note: Before calling, the technician should have the model and serial number of the unit available for the service department to help answer questions regarding the unit.

8.8. UV Lights

Some units include UV lights for airstream disinfection. The UV fixture is installed directly downstream of the cooling coil. Door interlock switches are provided with this option. In addition to door interlock switch(es), the UV light safety circuit contains a latching-logic relay with a push-button reset located on controls panel.

In the event that a door opens, exposing the user to the UV bulbs, the door interlock switch will break the UV light safety circuit, killing power to the UV bulbs, and the latching relay will keep the circuit open until the door interlock switch has returned to the closed position, and the push-button reset has been pressed. UV lamps ship loose in the vestibule and require installation during startup.

Useful lamp life shall be 9000 hours (minimum) with no more than a 15% output loss at the end of the lamp's life. Use AAON Part # R68850 for lamp replacement.

WARNING

UV Lights:
Never expose eyes or skin to UVC light from any source, as personal injury may result. Wear gloves, face shield/glasses (per ANSI Z87.1), and cover all exposed skin.

8.9. Decommissioning

Before decommissioning the unit, ensure you are familiar with the unit and its operation. Only individuals qualified to handle refrigerant may remove the charge from the unit. The unit must be isolated electrically before beginning any decommissioning work. Proper PPE is required

Ensure any equipment that may be needed for handling refrigerant cylinders safely is available. Equipment and cylinders used for recovery must be in good working order and comply with appropriate standards.

Operate the recovery machine in accordance with the instructions. Remove refrigerant from all parts of the refrigeration system. On heat pumps, refrigerant must be recovered from discharge, suction, and common liquid lines.

Weigh out refrigerant when removing to ensure that all refrigerant is removed and cylinders are not overfilled. Place the refrigerant cylinder on the scales before beginning the recovery process. Do not exceed the maximum pressure of the cylinder.

When recovery is completed, remove all cylinders containing recovered refrigerant from the site. Ensure all isolation valves on equipment are closed and all warning decals are still visible on the unit.

Label the unit as having been decommissioned, and date and sign the label.

9. WARRANTY

Refer to the Limited Warranty certificate for the unit's warranty details. Contact an AAON representative for a unit-specific copy of the certificate for the unit's serial number.

Limited Warranty Certificate

GENERAL CONDITIONS
AAON, Inc. (hereinafter referred to as "AAON") warrants this AAON equipment, as identified hereon, to be free of defects in material and workmanship under normal use, service, and maintenance. Our obligations under this warranty must be limited to repairing or replacing the defective part, or parts, which in our judgment show evidence of such defects. AAON is not liable for labor charges and other costs incurred for removing, shipping, handling or transporting defective part, or parts, or for shipping, handling, transporting, or installing repaired or replacement part, or parts.

The limited warranty is effective one (1) year from date of **original installation**, or eighteen (18) months from date of original shipment from the factory, whichever occurs first and covers all parts and components in this AAON equipment excluding air filters, belts, refrigerant moisture driers, and lost refrigerant, which are not included in any part of this limited warranty. The replacement part, or parts, assume only the unused portion of the original limited warranty and are shipped f.o.b. from the factory and freight prepaid by the factory.

The limited warranty is effective for products manufactured at the Tulsa, Oklahoma or Longview, Texas facility.

THIS LIMITED WARRANTY ONLY APPLIES WHEN THE **ORIGINAL MODEL NUMBER AND SERIAL NUMBER** OF THE AAON UNIT ARE GIVEN AT TIME OF REQUEST FOR REPLACEMENT PART, OR PARTS. DEFECTIVE PART, OR PARTS, MUST BE RETURNED **PREPAID**, WITH ITS ASSIGNED RETURN MATERIAL TAG, WITHIN FOURTEEN (14) DAYS OF RECEIPT OF THE REPLACEMENT PART, OR PARTS.

EXTENDED LIMITED WARRANTY ON COMPRESSORS INCLUDED IN SINGLE PACKAGE EQUIPMENT (NOT INCLUDING CHILLERS OR WHWV); OPTIONAL ON OTHER EQUIPMENT
For the second through the fifth year from date of **shipment**, we further agree to repair or replace the fully hermetic compressor, at our option, for the **original purchase-user only**. The repaired or replacement fully hermetic compressor will be supplied f.o.b. the factory, freight **prepaid and add**, providing the defective fully hermetic compressor is returned **prepaid by the customer**, and is proven to be inoperative due to defects in materials or workmanship. This extended limited warranty covers **only** the fully hermetic compressor and **does not include** any labor charges, or other additional costs incurred for removing, shipping, handling, transporting, or replacing the defective fully hermetic compressor. It also **does not include** additional costs incurred for shipping, handling, or transporting of electric controls such as relays, capacitors, pressure controls, or fan-motor assemblies, condensers, receivers, etc. which carry the standard **one-year limited warranty**.

EXTENDED LIMITED WARRANTY OF WH/WV PRODUCTS
The WH/WV limited warranty is effective five (5) years from date of original installation. If installation date cannot be verified, limited warranty is effective five (5) years from date of equipment manufacture at the factory. Warranty covers all parts and components, including compressors, in this AAON equipment except those excluded in the general conditions.

EXTENDED LIMITED WARRANTY OF RQ PRODUCTS
The RQ limited warranty is effective two (2) years from date of original **shipment** from the factory and covers all parts and components in this AAON equipment except those excluded in the general conditions.

FOR OPTIONAL TWO YEAR EXTENDED LIMITED WARRANTY OF RN PRODUCTS
The limited warranty is effective two (2) years from date of original **shipment** from the factory and covers all parts and components in this AAON equipment except those excluded in the general conditions.

FOR OPTIONAL FIVE YEAR EXTENDED LIMITED WARRANTY OF RN or RQ PRODUCTS
The limited warranty is effective five (5) years from date of original **shipment** from the factory and covers all parts and components in this AAON equipment except those excluded in the general conditions.

FOR OPTIONAL TEN YEAR EXTENDED LIMITED WARRANTY OF RN or RQ PRODUCTS
The limited warranty is effective ten (10) years from date of original **shipment** from the factory and covers all parts and components in this AAON equipment except those excluded in the general conditions.

FOR OPTIONAL FIVE YEAR EXTENDED LIMITED WARRANTY OF RN OR RQ ECONOMIZER WITH FAULT DETECTION AND DIAGNOSTICS
For the second through fifth year from date of shipment, we further warrant the economizer damper assembly against failure due to defects in materials and workmanship for the original purchaser-user only.

EXTENDED LIMITED WARRANTY OF GAS FIRED HEAT EXCHANGERS

FOR RQ OR RN ALUMINIZED STEEL HEAT EXCHANGERS
For the second through the fifteenth year from date of **shipment**, we further warrant the steel heat exchanger against failure due to defects in materials and workmanship for the **original purchaser-user only**.

FOR RQ, RN, OR RZ STAINLESS STEEL HEAT EXCHANGERS
For the second through the twenty-fifth year from date of **shipment**, we further warrant the stainless steel heat exchanger against failure due to defects in materials and workmanship for the **original purchaser-user only**.

FOR RL SERIES HEAT EXHANGERS
For the second through the tenth year from date of original installation, we further warrant the steel heat exchanger against failure due to defects in materials and workmanship for the original purchaser-user only, in accordance with the following: For the first five (5) years from date of shipment, we agree to repair or replace the heat exchanger, at our option, for the original purchaser-user only; during the sixth year, we will charge 50% of the current trade price for repaired or replacement steel heat exchanger, as the case may be, during the seventh year, 60%, during the eighth year, 70% during the ninth year, 80% and during the tenth year, 90%.

In all cases, the repaired or replacement heat exchanger will be supplied f.o.b. our factory, freight prepaid, providing the defective heat exchanger is returned **prepaid**, and if it is proved to be inoperative due to defects in materials and workmanship. This extended limited warranty covers **only** the heat exchanger and **does not include** labor charges, or other costs incurred for removing, shipping, handling, transporting, or installing repaired replacement heat exchanger. This extend limited warranty **does not apply** where the furnace has been operated in an atmosphere contaminated by chlorine, fluorine, or any other damaging chemical compounds.

FOR OPTIONAL FIVE YEAR EXTENDED LIMITED WARRANTY OF COIL COATING
For the second through fifth year from date of shipment, we further warrant the coating of e-coated coils on the equipment against failure due to defects in materials and workmanship for the original purchaser-user only. Coil cleaning, maintenance, and record keeping must be followed according to the unit Installation, Operation and Maintenance Manual to maintain warranty.

1 of 2

Limited Warranty Certificate

OTHER CONDITIONS
This warranty **does not cover** any AAON unit or part thereof which has been subject to accident, negligence, damages in transit, misuse or abuse, **or which has been tampered with or altered in any way**, or which has **not** been installed operated serviced and maintained in accordance with our instructions, or which has been installed outside of the Continental United States or Canada, or on which the serial number or identification number has been altered defaced, or removed. AAON will not be responsible for failure of the unit to start due to voltage conditions, blown fuses, open circuit breakers, or other damages due to the inadequacy or interruption of electric service.

This warranty **does not cover** equipment containing a water-to-refrigerant heat exchanger for any damage resulting from freezing, fouling, corrosion or clogging.

AAON must not be liable for any default or delay in performance hereunder, caused by a contingency beyond its control, including governmental restrictions or restraint, strikes, short or reduced supply of raw materials or parts, floods, winds, fire, lightning strikes, or any other acts of God.

DISCLAIMERS OF WARRANTIES

THIS WARRANTY IS EXCLUSIVE AND IS IN LIEU OF ANY WARRANTY OF MERCHANTABILITY, FITNESS FOR A PARTICULAR PURPOSE OR OTHER WARRANTY OF QUALITY, WHETHER EXPRESS OR IMPLIED, EXCEPT OF TITLE AND AGAINST PATENT INFRINGEMENT. CORRECTION OF NON-CONFORMITIES ARE LIMITED TO REPAIR OR REPLACEMENT OF THE DEFECTIVE PART OR PARTS, AT SELLER'S OPTION, WHICH MUST CONSTITUTE FULFILLMENT OF ALL TORT OR OTHERWISE IT IS EXPRESSLY UNDERSTOOD THAT AAON MUST NOT BE LIABLE FOR ANY CONSEQUENTIAL OR INCIDENTAL DAMAGES. AAON MUST NOT UNDER ANY CIRCUMSTANCES BE LIABLE FOR SPECIAL, INCIDENTAL OR CONSEQUENTIAL DAMAGES, SUCH AS, BUT NOT LIMITED TO DAMAGES OR LOSS OF OTHER PROPERTY OR EQUIPMENT, LOSS OF PROFITS OR REVENUE, COST OF CAPITAL, COST OF PURCHASED OR REPLACEMENT GOODS, OR CLAIMS OF BUYER OR USER FOR SERVICE INTERRUPTIONS. THE REMEDIES OF THE BUYER SET FORTH HEREIN ARE EXCLUSIVE, AND THE LIABILITY OF AAON WITH RESPECT TO ANY CONTRACT, OR ANYTHING DONE IN CONNECTION THEREWITH SUCH AS THE PERFORMANCE OR BREACH THEREFORE, OR FROM THE MANUFACTURE, SALE, DELIVERY, RESALE, INSTALLATION, OR USE OF ANY GOODS COVERED BY OR FURNISHED UNDER THIS CONTRACT WHETHER ARISING OUT OF CONTRACT, NEGLIGENCE, STRICT TORT, OR UNDER ANY WARRANTY, OR OTHERWISE, MUST NOT EXCEPT AS EXPRESSLY PROVIDED HEREIN, EXCEED THE PRICE OF THE GOODS UPON WHICH SUCH LIABILITY IS BASED.

WITH RESPECT TO THE GOODS SOLD, THE BUYER HEREBY WAIVES ALL LIABILITY ARISING FROM STATUTE, LAW, STRICT LIABILITY IN TORT, OR OTHERWISE, INCLUDING WITHOUT LIMITATION ANY OBLIGATION OF AAON WITH RESPECT TO CONSEQUENTIAL OR INCIDENTAL DAMAGES AND WHETHER OR NOT OCCASIONED BY AAON NEGLIGENCE. TIME LIMIT ON COMMENCING LEGAL ACTIONS. AN ACTION FOR BREACH OF THIS CONTRACT FOR GOOD SOLD OR ANY OTHER ACTION OTHERWISE ARISING OUT OF THIS CONTRACT, MUST BE COMMENCED WITHIN ONE (1) YEAR FROM THE DATE, THE RIGHT, CLAIM, DEMAND OR CAUSE OF ACTION MUST FIRST OCCUR, OR BE BARRED FOREVER.

SEVERABILITY

IF ANY PROVISION OR CAUSE OF THIS CONTRACT OR APPLICATION THEREOF TO ANY PERSON OR CIRCUMSTANCES IS HELD INVALID OR UNCONSCIONABLE SUCH INVALIDITY OR UNCONSCIONABILITY MUST NOT AFFECT OTHER PROVISIONS OR APPLICATIONS OF THE CONTRACT WHICH CAN BE GIVEN EFFECT WITHOUT THE INVALID OR UNCONSCIONABLE PROVISIONS OF THE CONTRACT ARE DECLARED BE SEVERABLE.

EQUIPMENT INFORMATION (REQUIRED)

Job Name: Click or tap here to
Sales Order Number: Click or tap here to enter text.
Unit Tag: Click or tap here to enter text
Date of Shipment: Click or tap here to enter text.
Serial Number: Click or tap here to enter text.
Unit Model Number: Click or tap here to enter text.

2 of 2

10. SA SERIES START-UP FORMS

Job Name: _____ Date: _____

Installed Address:

_____

_____

Model Number: _____

Serial Number: _____ Tag: _____

Startup Contractor: _____

Address: _____

_____ Phone: _____

10.1. Pre-Startup Checklist

1. Is there any visible shipping damage?	☐ Yes
2. Is the unit level?	☐ Yes
3. Are the unit clearances adequate for service and operation?	☐ Yes
4. Do all access doors open freely, and are the handles operational?	☐ Yes
5. Have all shipping braces been removed?	☐ Yes
6. Have all electrical connections been tested for tightness?	☐ Yes
7. Has all gas heat piping been checked for leaks?	☐ Yes
8. Does the electrical service correspond to the unit nameplate?	☐ Yes
9. On 208/230V units, has the transformer tap been checked?	☐ Yes
10. Has overcurrent protection been installed to match the unit nameplate requirement?	☐ Yes
11. Have all set screws on the fans been tightened?	☐ Yes
12. Do all fans rotate freely?	☐ Yes
13. Does the field water piping to the unit appear to be correct per design parameters?	☐ Yes
14. Is all copper tubing isolated so that it does not rub?	☐ Yes
15. Have the damper assemblies been inspected?	☐ Yes
16. Are air filters installed with proper orientation?	☐ Yes
17. Have the condensate drain and p-trap been connected?	☐ Yes
18. Is the actual refrigerant charge of the largest circuit in accordance with the required conditioned floor area according to Table 16?	☐ Yes
19. Are ventilation and exhaust openings unobstructed?	☐ Yes
20. Are markings, decals, and warnings on the unit clearly visible?	☐ Yes
21. Are all damaged or illegible markings and warnings replaced?	☐ Yes

10.2. A2L Refrigerant Detection System (RDS) Pre-Start Checklist

1. Does each port (sensor 1-3) have a male connector plugged into both the Cabinet and Airstream connection on the mitigation board?	☐ Yes
2. Do the compressor and gas heat operation shut off when the cabinet board sensor trips?	☐ Yes
3. Normal unit operation commences except for the compressor and gas heater after the cabinet board sensor trips?	☐ Yes
4. Does the compressor shut off and the fan stay on when the Airstream board sensor trips?	☐ Yes
5. Non-compressor or gas heating/cooling stay on when both boards trip? (electric heater stays on)	☐ Yes
6. When the A2L airstream alarm is activated, do supply fans start, VAV boxes open, and compressors stop?	☐ Yes

10.3. Ambient Temperature

Ambient Temperature	
Ambient Dry Bulb Temperature _____°C/°F	Ambient Wet Bulb Temperature _____°C/°F

10.4. Supply Fan Assembly

Alignment ☐		Check Rotation ☐		Nameplate Amps _____
Number	**Hp**	**L1 Volts/Amps**	**L2 Volts/Amps**	**L3 Volts/Amps**
1				
2				
3				
4				
Band Size_____		VAV Controls _____		
VFD Frequency _____				

10.5. Compressors/DX Cooling

Number	L1 Volts/Amps	L2 Volts/Amps	L3 Volts/Amps	Head Pressure PSIG	Suction Pressure PSIG
1					
2					
3					
4					

10.6. Refrigeration Systems Cooling Mode

Refrigeration System 1 - Cooling Mode					
	Pressure	Saturated Temperature	Line Temperature	Sub-cooling	Superheat
Discharge				N/A	N/A
Suction				N/A	
Liquid					N/A

Refrigeration System 2 - Cooling Mode					
	Pressure	Saturated Temperature	Line Temperature	Sub-cooling	Superheat
Discharge				N/A	N/A
Suction				N/A	
Liquid					N/A

Refrigeration System 3 - Cooling Mode					
	Pressure	Saturated Temperature	Line Temperature	Sub-cooling	Superheat
Discharge				N/A	N/A
Suction				N/A	
Liquid					N/A

Refrigeration System 4 - Cooling Mode					
	Pressure	Saturated Temperature	Line Temperature	Sub-cooling	Superheat
Discharge				N/A	N/A
Suction				N/A	
Liquid					N/A

10.7. Refrigeration Systems Heating Mode

Refrigeration System 1 - Heating Mode (Heat Pump Only)					
	Pressure	Saturated Temperature	Line Temperature	Sub-cooling	Superheat
Discharge				N/A	N/A
Suction				N/A	
Liquid					N/A

Refrigeration System 2 - Heating Mode (Heat Pump Only)					
	Pressure	Saturated Temperature	Line Temperature	Sub-cooling	Superheat
Discharge				N/A	N/A
Suction				N/A	
Liquid					N/A

Refrigeration System 3 - Heating Mode (Heat Pump Only)					
	Pressure	Saturated Temperature	Line Temperature	Sub-cooling	Superheat
Discharge				N/A	N/A
Suction				N/A	
Liquid					N/A

Refrigeration System 4 - Heating Mode (Heat Pump Only)					
	Pressure	Saturated Temperature	Line Temperature	Sub-cooling	Superheat
Discharge				N/A	N/A
Suction				N/A	
Liquid					N/A

10.8. Unit Configuration

Water- Cooled Condenser ☐	Air Cooled Condenser ☐
No Water Leaks ☐	
Condenser Safety Check ☐	
Water Flow _____GPM	
Water Inlet Temperature _____°F	
Water Outlet Temperature _____°F	

10.9. Water/Glycol System

1. Has the entire system been flushed and pressure checked?	☐ Yes
2. Has the entire system been filled with fluid?	☐ Yes
3. Has air been bled from the heat exchangers and piping?	☐ Yes
4. If glycol is used, is it the proper type and concentration (N/A if water)?	☐ Yes
5. Is there a minimum load of 50% of the design load?	☐ Yes
6. Has the water piping been insulated?	☐ Yes
7. What is the freezing point of the glycol (N/A if water)? _____	☐ Yes

10.10. Air-Cooled Condenser Fans

Alignment ☐		Check Rotation ☐		Nameplate Amps _____
Number	**Hp**	**L1 Volts/Amps**	**L2 Volts/Amps**	**L3 Volts/Amps**
1				
2				
3				
4				
5				
6				

10.11. Additional Findings

10.12. Signature

By signing this form, you verify that all of the information contained is correct and filled out to the best of your ability.

Name:		
Title:		
Rep/Contractor:		
Signature:_____		**Date/Time**:_____

11. APPENDIX A: UNIT SAFETY HIERARCHY

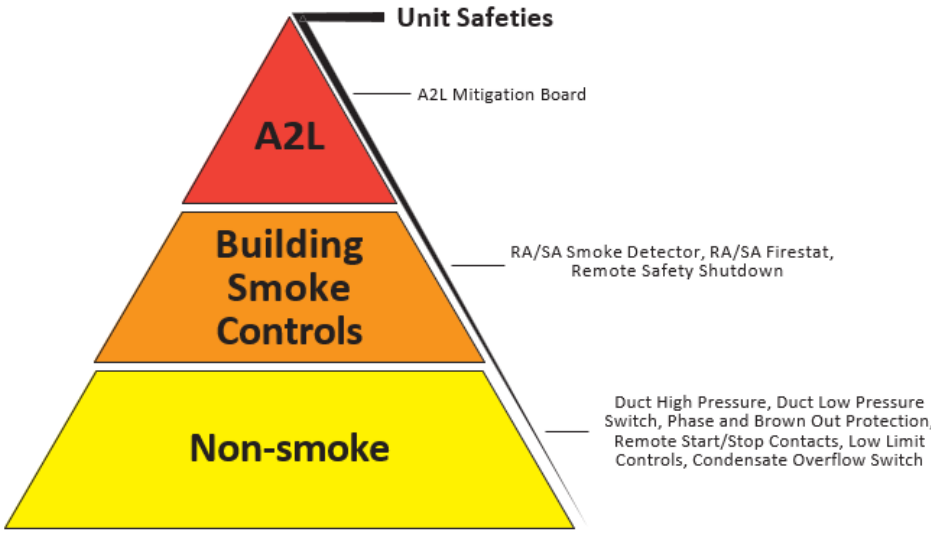

Figure 26: Unit Safety Hierarchy

Default (A2L Priority)

Units will ship with A2L sequences at the highest priority. This may activate the indoor blower in the event of an A2L leak, even if Building Smoke Controls or Non-smoke safeties interrupt the 24V/120V safety circuit. The terminal block labeled 'Hierarchy Control' will control the priority.

The jumper will connect 'Com' and 'A2L' for A2L priority.

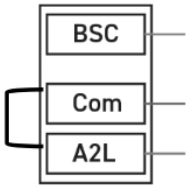

Figure 27: A2L Priority Jumper

Building Smoke Control Priority

Units will have the option to shift the Unit Safety Hierarchy in the field. To shift the priority, turn the power off to the unit and move the jumper to 'Com' and 'BSC' on the 'Hierarchy Control' terminals.

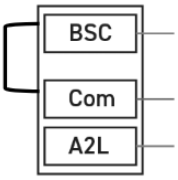

Figure 28: Building Smoke Control Priority Jumper

Example Scenario

If priority is given to Building Smoke Controls, and simultaneously both A2L and any of the Building Smoke Controls goes into alarm, the 24V/120V safety circuit will shut down the unit, and A2L mitigation will not take place.

Locating the "Hierarchy Control" LVTB

Locate the low voltage control section

Identify the 'Hierarchy Control' label by the (3) terminals labeled "BSC", "COM", and "A2L"

12. APPENDIX B: HEAT EXCHANGER CORROSION RESISTANCE

Corrosion Resistance of Copper and Stainless Steel in Brazed Plate Heat Exchangers - Points to Measure and Check in a Water Analysis

The resistance guide provides the corrosion resistance of stainless-steel type AISI 316 and pure Copper (99.9%) in water, to a number of important chemical factors. The actual corrosion is a very complex process influenced by many different factors in combination.

Explanations:

[+] Good resistance under normal conditions
[0] Corrosion problems may occur, especially when more factors are valued 0
[-] Use is not recommended

Table 29: Corrosion Resistance

Water Containing	Concentration (mg/L or ppm)	Time Limits - Analyze Before	AISI 316	SMO 254	Copper Alloy	Nickel Alloy
Alkalinity (HCO_3^-)	< 70	Within 24 Hours	+	+	0	+
	70-300		+	+	+	+
	> 300		+	+	0/+	+
Sulfate ($SO4^{2-}$)	< 70	No Limit	+	+	+	+
	70-300		+	+	0/-	+
	> 300		0	0	-	+
HCO_3^-/ $SO4^{2-}$	> 1.0	No Limit	+	+	+	+
	< 1.0		+	+	0/-	+
Electrical Conductivity	< 10µS/cm	No Limit	+	+	0	+
	10-500 µS/cm		+	+	+	+
	> 500 µS/cm		+	+	0	+
pH	< 6.0	Within 24 Hours	0	0	0	+
	6.0-7.5		0/+	+	0	+
	7.5-9.0		+	+	+	+
	> 9.0		+	+	0	+
Ammonium (NH_4^+)	< 2	Within 24 Hours	+	+	+	+
	2-20		+	+	0	+
	> 20		+	+	-	+
Chlorides (Cl^-)*	< 300	No Limit	+	+	+	+
	> 300		0	+	0/+	+
Free Chlorine (Cl_2)	< 1	Within 5 Hours	+	+	+	+
	1-5		+	+	0	+
	> 5		0/+	+	0/-	+

Note: See Chlorine Content Table

Table 30: Corrosion Resistance Continued

Water Containing	Concentration (mg/L or ppm)	Time Limits - Analyze Before	AISI 316	SMO 254	Copper Alloy	Nickel Alloy
Hydrogen Sulfide (H_2S)	< 0.05	No Limit	+	+	+	+
	> 0.05		+	+	0/-	+
Free (aggressive) Carbon Dioxide (CO_2)	< 5	No Limit	+	+	+	+
	5-20		+	+	0	+
	> 20		+	+	-	+
Total Hardness (°dH)	4.0-8.5	No Limit	+	+	+	+
Nitrate (NO_3)	< 100	No Limit	+	+	+	+
	> 100		+	+	0	+
Iron (Fe)	< 0.2	No Limit	+	+	+	+
	> 0.2		+	+	0	+
Aluminum (Al)	< 0.2	No Limit	+	+	+	+
	> 0.2		+	+	0	+
Manganese (Mn)	< 0.1	No Limit	+	+	+	+
	> 0.1		+	+	0	+

Table 31: Chloride Content

Chloride Content	Maximum Temperature			
	60°C (140°F)	80°C (176°F)	120°C (248°F)	130°C (266°F)
= 10 ppm	SS 304	SS 304	SS 304	SS 316
= 25 ppm	SS 304	SS 304	SS 316	SS 316
= 50 ppm	SS 304	SS 316	SS 316	Ti/SMO 254
= 80 ppm	SS 316	SS 316	SS 316	Ti/SMO 254
= 150 ppm	SS 316	SS 316	Ti/SMO 254	Ti/SMO 254
= 300 ppm	SS 316	Ti/SMO 254	Ti/SMO 254	Ti/SMO 254
> 300 ppm	Ti/SMO 254	Ti/SMO 254	Ti/SMO 254	Ti/SMO 254

13. APPENDIX C: MAINTENANCE LOGS

This log must be kept with the unit. It is the responsibility of the owner and/or maintenance/service contractor to document any service, repair, or adjustments. AAON Service and Warranty Departments are available to advise and provide phone help for proper operation and replacement parts. The responsibility for proper start-up, maintenance, and servicing of the equipment falls to the owner and a qualified licensed technician.

Entry Date	Action Taken	Name/Tel.

14. APPENDIX D: MAINTENANCE LOG (E-COATED COIL)

Installation Site: _____ Installation Date: _____

Unit Model #: _____ Unit Location: _____

Unit Serial #: _____ Customer: _____

Year 20__	Ambient Temp (°F)	Surface Debris Removed	Coil Cleaned	Approved Cleaner Used	Potable Water Backwash Rinse	Potable Water Frontwash Rinse	Chlorides Removed	Comments
JAN		☐	☐	☐	☐	☐	☐	
FEB		☐	☐	☐	☐	☐	☐	
MAR		☐	☐	☐	☐	☐	☐	
APR		☐	☐	☐	☐	☐	☐	
MAY		☐	☐	☐	☐	☐	☐	
JUN		☐	☐	☐	☐	☐	☐	
JUL		☐	☐	☐	☐	☐	☐	
AUG		☐	☐	☐	☐	☐	☐	
SEP		☐	☐	☐	☐	☐	☐	
OCT		☐	☐	☐	☐	☐	☐	
NOV		☐	☐	☐	☐	☐	☐	
DEC		☐	☐	☐	☐	☐	☐	

The following cleaners have been approved for use on AAON E-Coated Coils to remove mold, mildew, dust, soot, greasy residue, lint, and similar particulates without harming the coated surfaces.

Cleaning Agent	Reseller	Part Number
GulfClean ™ Coil Cleaner Or Enviro-Coil Cleaner	RectorSeal 2601 Spenwick Drive, Houston, Texas 77055 (P): 713-263-8001	G074480 / 80406 Or V82540
GulfClean Salt Reducer ™	" "	G074480 / 80406

Recommended Chloride Remover
RectorSeal 2601 Spenwick Drive, Houston, Texas 77055 (P): 713-263-8001

15. LITERATURE CHANGE HISTORY

August 2023

Start of new UL-60335 IOM. Added UL-60335 information for text, warnings, and tables. Added metric conversions to all imperial units in the document. Added metric pressure-temperature tables.

January 2024

Added a table for minimum areas when charging a unit.

May 2024

Additional warnings added. Text added to the installation section about proper ventilation requirements. Minimum Floor Area for the charge table added. Added "Refrigerant Detection System" for the new mitigation board for A2L refrigerant. Additional checklist items added to the Startup form. Sentence added to storage section with regard to ASHRAE 15 requirements. Added section about proper Refrigerant removal and Evacuation.

July 2024

Added text about UV lights and lamp replacement part number.

August 2024

Added the process of decommissioning the unit. Added text to General Information stating the maximum installation elevation is 11,500 ft.

September 2024

Added detailed text for the RDS mitigation board operation for the A2L sensors.

October 2024

Updated part number. Added text in the supply fan section about adjusting the set screw and a figure of what the gap of the plenum looks like.

January 2025

Updated decommissioning section. Updated RDS section, updated startup form. Updated the Warnings and Caution section.

December 2025

Updated and edited document formatting. Edited options to align with those available in ECAT. Added content to section 8.10. Added Appendix B.

June 2026

Updated unit size in document title; Removed 6 paragraphs from the Safety section; Removed content from Table 5; Added Table 6: Nameplate Voltage Markings & Tolerances; Updated Feature String; Updated Section 8.5; Replaced Figure 25; Removed Sections 8.6 and 8.7.

September 2026

Updated revision to “D”. Added “Install this appliance in accordance with local codes...” paragraph to Safety Section. Corrected Heading 1 issue throughout.

AAON

2425 South Yukon Ave.

Tulsa, OK 74107-2728

Phone: 918-583-2266

Fax: 918-583-6094

www.AAON.com

SA Series

Installation, Operation, & Maintenance

G164870 · Rev. D · 20260915

AAON® is a subsidiary of The Aaon Group. It is the intent of The Aaon Group to provide accurate and current product information. However, in the interest of product improvement, The Aaon Group reserves the right to change pricing, specifications, and/or design of its product without notice, obligation, or liability.

Copyright © AAON®, all rights reserved throughout the world.

AAON® and AAONAIRE® are registered trademarks of The Aaon Group, Tulsa, OK.