Installation, Operation, and Maintenance Manual

2026

RZ Series (45–240 ton)

Packaged Rooftop Units and Outdoor Air Handling Units

The information in this document is subject to change. Printed versions may not reflect the most current updates. Please ensure that you have the most recent version prior to referencing any information within the document. Visit www.aaon.com to confirm your version is up to date, or to download the most recent version.

R-454B

Conforms to UL STDs 60335-1 and 60335-2-40

Rev D Version 20260915

This Page Intentionally Left Blank

TABLE OF CONTENTS

1. AAON® RZ SERIES FEATURES AND OPTION'S INTRODUCTION 1
2. SAFETY 2
3. NOTES, WARNINGS, AND CAUTIONS 3
4. RZ SERIES FEATURE STRING NOMENCLATURE 11
4.1. RZ Series Feature String Description 11
5. GENERAL INFORMATION 36
5.1. Certification of Gas Heat Models 36
5.2. Certification of Steam or Hot Water Heat Models 36
5.3. Certification of Electric Heat Models 36
5.4. Certification of Cooling Models 36
5.5. Codes and Ordinances 37
5.6. Receiving Unit 38
5.7. Storage 38
5.8. Access Doors 38
5.9. Installation 39
5.10. Startup 55
5.11. Operation 70
5.12. Maintenance 73
5.13. Options 80
6. APPENDIX A: UNIT SAFETY HIERARCHY 131
7. APPENDIX B: HEAT EXCHANGER CORROSION RESISTANCE 132
8. APPENDIX C: START-UP FORMS 134
9. APPENDIX D: MAINTENANCE LOGS 143
10. APPENDIX E: MAINTENANCE LOG (E-COATED COIL) 144
11. LITERATURE CHANGE HISTORY 145

TABLE OF FIGURES

Figure 1: Lockable Door Handles 38
Figure 2: RZ Series Unit Orientation 39
Figure 3: Base Rail Lifting Lug 41
Figure 4: Four-Point Lift RZ Series Air-Cooled Condenser Unit 42
Figure 5: Eight-Point Lift RZ Series Air-Cooled Condenser Unit 43
Figure 6: Curb Mounting 44
Figure 7: Curb Detail 44
Figure 8: Curb & Steel Mounting Rail with Dimensions 44
Figure 9: Unit Base and Sides 45
Figure 10: Unit Roof Flange Splice Detail 45
Figure 11: Air Hood Shown in the Open Position 47
Figure 12: Factory-Supplied Splash Guards 47
Figure 13: Vestibule Exhaust Fan 48
Figure 14: Motorized Exhaust 48
Figure 15: Power Block 50
Figure 16: Draw-Through Drain Tap 53
Figure 17: Blow-through Drain Trap 54
Figure 18: Top Clip and Side Spring Fastener Securing Filters in Place 55
Figure 19: Air Volume Band 56
Figure 20: Air Volume Band Tab Locations 56
Figure 21: Securing Air Volume Band Ends 57
Figure 22: Plenum Fan Gap Tolerances 57
Figure 23: 2021 IECC Regions Across the United States 58
Figure 24: Replaceable Core Liquid Filters/Driers Suction Filter 67
Figure 25: RPE-48-BD Filter Element 67
Figure 26: Close the Isolation Valves around the Suction Filter 68
Figure 27: Remove the Bolts 68
Figure 28: Remove the Pleated Filter 68
Figure 29: Proper Unit Location 86
Figure 30: Improper Unit Locations 86
Figure 31: Temporary Drain Components 87
Figure 32: Water Makeup Valve 89
Figure 33: Evaporative Cooled Condenser 91
Figure 34: Evaporative Condenser Access Door 93
Figure 35: Polymer Energy Recovery Wheel 97

Figure 36: Wheel Adjusting Screws 98
Figure 37: Purge Angle Gauge 98
Figure 38: Wheel Adjusting Screws Can Be Used to Adjust the Purge Seal 98
Figure 39: Cross Section of Air Seal Structure 99
Figure 40: Avoid Racking of Cassette Frame 100
Figure 41: Diameter Seal Adjustment 101
Figure 42: Hub Seal Adjustment 101
Figure 43: Lifting Hole Locations 102
Figure 44: Polymer Wheel Segment Removal Pattern 103
Figure 45: Segment Retainer 104
Figure 46: Segment Installation 104
Figure 47: Belt Replacement 105
Figure 50: Switch in the Off Position 115
Figure 51: Gas Heat Exchanger 117
Figure 52: Typical Factory Mutual (FM) Gas Piping Schematic for a Direct-Fired Heater 119
Figure 53: Removing Piping Scale with Pin Vise 123
Figure 54: Digital Phase and Brownout Protection Module 124
Figure 55: Analog PBO 124
Figure 54: Unit Safety Hierarchy 131
Figure 55: A2L Priority Jumper 131
Figure 56: Building Smoke Control Priority Jumper 131

TABLE OF TABLES

Table 1: Air-Cooled Condenser Unit Clearances 45-240-tons 39
Table 2: Evaporative Condenser Unit Clearances 45-240-tons 39
Table 3: Mounting Dimensions 44
Table 4: Nameplate Voltage Markings & Tolerances 49
Table 5: 35 KAIC Fuse Sizing 51
Table 6: 35 KAIC Fuse Sizing 51
Table 7: Draw-Through Drain Trap Dimensions (Metric) 53
Table 8: Draw-Through Drain Trap Dimensions (Imperial) 53
Table 9: Blow-Through Drain Trap Dimensions (Metric) 54
Table 10: Blow-Through Trap Dimensions (Imperial) 54
Table 11: Plenum Fan Set Screw Specifications 57
Table 12: Acceptable Fin & Tube Sub-Cooling and Superheat Temperatures 60
Table 13: Acceptable Microchannel Air-Cooled Condenser Coil Liquid Sub-Cooling Values (Metric) 61
Table 14: Acceptable Microchannel Air-Cooled Condenser Coil Liquid Sub-Cooling Values (Imperial) 61
Table 15: Minimum Airflow and Room Areas 63
Table 16: Minimum Airflow and Room Areas (continued) 64
Table 17: R-454B Refrigerant Temperature-Pressure Chart (Metric) 65
Table 18: R-454B Refrigerant Temperature-Pressure Chart (Imperial) 66
Table 19: Filter Drier Maximum Pressure Drop 67
Table 20: EC Condenser Fan Cycling Options 69
Table 21: Hot Water Coil Connection Sizes 81
Table 22: Steam Distributing Coil Connection Sizes 81
Table 23: Chilled Water Coil Connection Sizes 82
Table 24: Min. and Max. Water Pressures and Temperatures 82
Table 25: Energy Recovery Wheel Cleaning Frequency 106
Table 26: RZ 45–140-ton Electric Heating Capacities 109
Table 27: RZ 145–240-ton Electric Heating Capacities 109
Table 28: RZ 45–140-ton Gas Heating Capacities 109
Table 29: RZ 145–240-ton Gas Heating 109
Table 30: Min. and Max Inlet Gas Pressures (Metric) 110
Table 31: Min. and Max Gas Pressures (Imperial) 110
Table 32: RZ 45-140-tons Unit Gas Piping Connections 110
Table 33: RZ 145-240-ton Unit Gas Piping Connections 110
Table 34: (Metric) Natural Gas Maximum Piping Capacities (m^3/hr) - Specific Gravity = 0.6, ... 111
Table 35: (Imperial) Natural Gas Maximum Piping Capacities (ft^3/hr) - Specific Gravity = 0.6, ... 111

Table 36: (Metric) Propane (kW) Maximum Piping Capacities Specific Gravity = 1.52, ... 111
Table 37: (Imperial) Propane (kBtu/hr) Maximum Piping Capacities Specific gravity = 1.52, ... 111
Table 38: Piping Support Intervals (Metric) 112
Table 39: Piping Support Intervals (Imperial) 112
Table 40: Maximum Temperature Rise Setpoint for Return Air Units 118
Table 41: PBO Recommended Settings 124
Table 42: Average Voltage Screen 125
Table 43: The Default Screen Shows the Real-Time Voltage Detected in Each of the Three Phases 125
Table 44: Voltage Selection Screen (Vertical Format) Default = 460V, 3Ø 125
Table 45: Over/Under Voltage Percentage Screen (Vertical Format) Default = 10% 125
Table 46: Trip Time Delay Screen (Vertical Format) Default = 10% 125
Table 47: Re-Start Time Delay Screen (Vertical Format) Default = 2 sec 125
Table 48: Phase Imbalance Percentage Screen (Vertical Format) Default = 5% 125
Table 49: Fault Screen (Vertical Format) 125
Table 50: Fault Words 125
Table 51: Air Disinfection UV Information 126
Table 52: RZ Series Filter Sizes 127
Table 53: Filter Conversion Table 128
Table 54: Metal Mesh and HEPA Filter Sizes 128
Table 55: Corrosion Resistance Guide 132
Table 56: Corrosion Resistance Guide Continued 133
Table 57: Chloride Content 133

This Page Intentionally Left Blank

1. AAON® RZ SERIES FEATURES AND OPTION'S INTRODUCTION

Energy Efficiency

- Direct Drive Airfoil Plenum Supply Fans
- Variable Speed Scroll Compressors
- AAON Evaporative Condenser
- Airside Economizer
- Factory-Installed AAONAIRE® Energy Recovery Wheels
- Double Wall Rigid Polyurethane Foam Panel Construction, R-13 Insulation
- Modulating Gas Heaters
- Modulating/SCR Electric Heaters
- Premium Efficiency Permanent Magnet Motors
- Variable Speed Supply/Return/Exhaust Fans

Indoor Air Quality

- 100% Outside Air
- Outside Airflow Monitoring
- Economizer CO2 Override
- High Efficiency Filtration
- Final Filters, including Gas Heat Systems
- UV Lights for Single Pass 90% Air Disinfection
- Interior Corrosion Protection

Humidity Control

- High-Capacity Cooling Coils
- Variable Speed Compressors
- Factory-Installed AAONAIRE® Total Energy Recovery Wheels
- Modulating Hot Gas Reheat

Safety

- Burglar Bars
- Freeze Stats
- Phase and Brown Out Protection
- Smoke Detectors
- Supply/Return Firestats
- Remote Safety Shutdown Terminals

Installation and Maintenance

- Clogged Filter Switch
- Color Coded Wiring Diagram
- Compressors in Isolated Compartment
- Compressor Isolation Valves
- Convenience Outlet
- Direct Drive Supply Fans
- VFD Shaft Grounding
- Hinged Access Doors with Lockable Handles
- Magnehelic Gauge
- Service Lights
- Sight Glasses
- BACnet MSTP with Diagnostics
- Remote Start-Stop Terminals
- Access Door Windows
- Motorized Fresh Air Service Vestibule

System Integration

- Chilled Water-Cooling Coils
- Electric/Natural Gas/LP Heating
- Hot Water/Steam Heating Coil
- Non-Compressorized DX Coils

Environmentally Friendly

- Airside Economizers
- Factory-Installed AAONAIRE® Energy Recovery Wheels
- R-454B Refrigerant

Extended Life

- 5-Year Compressor Warranty
- 25-Year Stainless-Steel Heat Exchanger Warranty
- Interior Corrosion Protection
- Polymer E-Coated Coils - 5-Year Coating Warranty
- Stainless-Steel Coil Casing
- Stainless-Steel Drain Pans

2. SAFETY

Attention must be paid to the following statements:

Startup and service must be performed by a Factory-Trained Service Technician competent in working with flammable refrigerants.

Gas heat units must be installed outdoors. See the General Information section for more information.

Only use gas heat units with the type of gas approved for the furnace. Refer to the furnace rating plate for details.

Provide adequate combustion ventilation air to the furnace. If a vent duct extension is used, a class III approval vent is required. See the Locating Units and Gas Heating sections of this manual.

Install and operate the furnace within the intended temperature rise range and duct system external static pressure (ESP) as specified on the unit nameplate.

Install this appliance in accordance with local codes. In the absence of local codes, install in accordance with ASHRAE 15, ASHRAE 15.2, IAPMO Uniform Mechanical Code, ICC International Mechanical Code, or CSA B52.

The supply and return air ducts must be derived from the same space. Ducts should be provided with access panels to allow for inspections of duct tightness. When a downflow duct is used with electric heat, the exhaust duct must be an L-shaped duct. If the plenum return is to be utilized, the return plenum must be provided with a refrigerant detection system or ventilation in accordance with ASHRAE 15 requirements.

Clean the furnace, duct, and components upon completion of the construction setup. Verify the furnace operating conditions, including input rate, temperature rise, and ESP.

Every unit has a unique equipment nameplate with electrical, operational, and unit clearance specifications. Refer to the unit nameplate for specific ratings unique to the model purchased.

Note: Read the entire installation, operation, and maintenance manual. Other important safety precautions are provided throughout this manual.

Keep this manual and all literature safeguarded near or on the unit.

This product is designed for the use of R-454B refrigerant only. The use of any other refrigerant in this product is not covered under ETL listing and will void the warranty.

3. NOTES, WARNINGS, AND CAUTIONS

Note: Notes are intended to clarify the unit installation, operation, and maintenance.

CAUTION

Caution statements are given to prevent actions that may result in equipment damage, property damage, or personal injury.

WARNING

Warning statements are given to prevent actions that could result in equipment damage, property damage, or serious injury.

DANGER

Danger statements are given to prevent actions that will result in equipment destruction, property damage, and severe personal injury or death.

WARNING

Electric Shock, Fire, or Explosion Hazard:
Failure to follow safety warnings could result in dangerous operation, serious injury, death, or property damage.

Improper servicing could result in dangerous operation, serious injury, death, or property damage.

- Before servicing, disconnect all electrical power to the furnace. More than one disconnect may be provided.
- When servicing controls, label all wires prior to disconnecting. Reconnect wires correctly after servicing.

Verify proper operation after servicing. Secure all doors with a key-lock or a nut and bolt.

WARNING

Electric Shock Hazard:
Before servicing, shut off all electrical power to the unit, including remote disconnects, to avoid shock hazard or injury from rotating parts. Follow proper Lockout-Tagout procedures.

WARNING

What To Do If You Smell Gas:

- Do not try to light any appliances.
- Do not touch any electrical switches; do not use any phones in the building.
- Leave the building immediately.
- Immediately call the gas supplier from a phone remote from the building. Follow the gas supplier's instructions.

Call the fire department if the gas supplier is not available.

CAUTION

What To Do If You Smell Gas:

- Do not try to turn on the unit.
- Shut off the main gas supply.
- Do not touch any electric switches.
- Do not use any phones in the building.
- Never test for gas leaks with an open flame.

Use a gas detection soap solution and check all gas connections and shut-off valves.

WARNING

Fire, Explosion, or Carbon Monoxide Poisoning Hazard:
Failure to replace proper controls could result in fire, explosion, or carbon monoxide poisoning. Failure to follow safety warnings exactly could result in serious injury, death, or property damage. Do not store or use gasoline or other flammable vapors and liquids in the vicinity of this appliance.

WARNING

Outside air ventilation must be provided for heaters that recirculate room air. Outside air must be provided in accordance with the information on the heater's nameplate.

WARNING

Carbon Monoxide Poisoning Hazard:
Failure to follow instructions could result in severe personal injury or death due to carbon-monoxide poisoning if combustion products penetrate the building.

Check that all openings in the outside wall around the vent, and air intake, pipe(s) are sealed to prevent the infiltration of combustion products into the building.

Check that the furnace vent, and air intake, terminal(s) are not obstructed in any way during all seasons.

WARNING

During the installation, testing, servicing, and troubleshooting of the equipment, it may be necessary to work with live electrical components. Only a qualified licensed electrician or an individual properly trained in handling live electrical components must perform these tasks.

Standard NFPA-70E, an OSHA regulation requiring an Arc Flash Boundary to be field established and marked for identification of where appropriate Personal Protective Equipment (PPE) should be worn, must be followed.

CAUTION

The unit power supply wire must only be copper or aluminum.

WARNING

Rotating Components:
The unit contains fans with moving parts that can cause serious injury. Do not open the door containing the fans until the power to the unit has been disconnected and the fan wheel has stopped rotating.

WARNING

Variable Frequency Drives:
Do not leave VFDs unattended in hand mode or manual bypass. Damage to personnel or equipment can occur if left unattended. When in hand mode or manual bypass mode VFDs will not respond to controls or alarms.

CAUTION

Electric motor over-current protection and overload protection may be a function of the Variable Frequency Drive to which the motors are wired. Never defeat the VFD motor overload feature. The overload ampere setting must not exceed 115% of the electric motor's FLA rating as shown on the motor nameplate.

CAUTION

Failure to properly drain and vent coils, when not in use during freezing temperatures, may result in coil and equipment damage.

WARNING

Do not use oxygen, acetylene, or air in place of refrigerant and dry nitrogen for leak testing. A violent explosion may result, causing injury or death.

WARNING

Unit Handling:
To prevent injury or death, the lifting equipment capacity must exceed unit weight by an adequate safety factor. Always test-lift the unit not more than 24-inches high to verify proper center of gravity lift point to avoid unit damage, injury, or death.

CAUTION

Rotation must be checked on all motors and compressors of three-phase units at startup by a qualified service technician. Scroll compressors are directional and can be damaged if rotated in the wrong direction. Compressor rotation must be checked using suction and discharge gauges. Fan motor rotation must be checked for proper operation. Alterations must only be made at the unit power connection.

WARNING

Water Pressure:
Before connecting the condensing water supply, verify that the water pressure is less than the maximum pressure shown on the unit nameplate. To prevent injury, or death, due to the instantaneous release of high-pressure water, the relief valves must be field supplied on the system water piping.

WARNING

Always use a pressure regulator, valves, and gauges to control incoming pressures when pressure testing a system. Excessive pressure may cause line ruptures, equipment damage, or an explosion, which may result in injury or death.

CAUTION

To prevent damage to the unit, do not use acidic chemical coil cleaners. Do not use alkaline chemical coil cleaners with a pH value greater than 8.5, after mixing, without first using an aluminum corrosion inhibitor in the cleaning solution.

WARNING

Some chemical coil cleaning compounds are caustic or toxic. Use these substances only in accordance with the manufacturer's usage instructions. Failure to follow instructions may result in equipment damage, injury, or death.

CAUTION

Do not clean DX refrigerant coils with hot water or steam. The use of hot water or steam on refrigerant coils will cause high pressure inside the coil tubing and damage to the coil.

CAUTION

Door compartments containing hazardous voltage or rotating parts are equipped with door latches to allow locks. Door latches are shipped with nuts and bolts requiring tooled access. If the shipping hardware is not replaced with a padlock, reinstall the nut and bolt after closing the door.

CAUTION

Cleaning the cooling tower or condenser water loop with harsh chemicals such as hydrochloric acid (muriatic acid), chlorine, or other chlorides can damage the refrigerant-to-water heat exchanger. Care must be taken to avoid allowing chemicals to enter the refrigerant-to-water heat exchanger. See Appendix A - Heat Exchanger Corrosion Resistance for more information.

CAUTION

To avoid hazards due to the inadvertent resetting of the THERMAL CUT-OUT, this appliance must not be supplied through an external switching device, such as a timer, or connected to a circuit that is regularly switched on and off by the utilities.

WARNING

Open Loop Applications:
Failure of the condenser because of chemical corrosion is excluded from coverage under AAON Inc. warranties and the heat exchanger manufacturer's warranties.

WARNING

Water Freezing:
Failure of the condenser due to freezing will allow water to enter the refrigerant circuit and will cause extensive damage to the refrigerant circuit components. Any damage to the equipment as a result of water freezing in the condenser is excluded from coverage under AAON warranties and the heat exchanger manufacturer's warranties.

WARNING

Compressor Cycling:
3 Minute Minimum Off Time - To prevent the motor from overheating, compressors must cycle off for a minimum of 3 minutes.
5 Minute Minimum on Time - To maintain the proper oil level, compressors must cycle on for a minimum of 5 minutes.
The cycle rate must not exceed 7 starts per hour.

WARNING

UV Lights:
Never expose eyes or skin to UVC light from any source, as personal injury may result. Wear gloves, face shield/glasses (per ANSI Z87.1), and cover all exposed skin.

WARNING

This appliance is not intended for use by people with reduced physical, sensory, or mental capabilities, or a lack of experience and knowledge, unless they have been given supervision or instruction concerning use of the appliance by a person responsible for their safety. Children must be supervised around this appliance.

WARNING

If a refrigerant leak is detected, remove/extinguish all sources of open flame. If repairing the refrigerant leak requires brazing, remove all refrigerant before beginning the brazing process.

WARNING

Do not use a torch or other potential ignition source to detect refrigerant leaks. Only use an electronic detector suitable for the refrigerant, or the bubble method with chlorine-free detergent.

WARNING

Connected ductwork must be free of potential ignition sources, such as hot surfaces above 700 °C (1292 °F), or electrical devices prone to arcing or sparking. Potential ignition sources within the ductwork may only be allowed if the minimum air velocity across these components is above 1 m/s (200 ft/min) at any point where the component can function.

WARNING

This appliance contains a flammable refrigerant. The minimum floor area on the nameplate is based on the factory charge at a ceiling/release height of 2.2 m (7.2 ft) in accordance with UL 60335-2-40. Refer to Table 15 for different allowable room areas based on other charges and ceiling/release heights. Apply the altitude adjustment factor to table values as required by local codes.

WARNING

If this appliance is installed to serve a conditioned area less than the minimum area as indicated in Table 15, the served space must be free of continuously operating open flames or other sources of ignition. Additional ventilation is required in accordance with ASHRAE 15.

WARNING

If any damage or fault to electrical equipment exists, do not provide power to the unit. If the issue cannot be resolved immediately, report the issue to the equipment owner to ensure that power is not supplied before the issue is resolved.

WARNING

Only auxiliary devices approved by the manufacturer or declared suitable with the refrigerant may be installed in ductwork.

WARNING

The minimum circulation airflow is required to prevent the stagnation of refrigerant in the event of refrigerant leaks. Zone dampers and VAV boxes must be used to maintain the minimum circulation airflow needed in the event of a refrigerant leak.

WARNING

Do NOT use a torch or other potential ignition source to detect refrigerant leaks. Only use an electronic detector suitable for the refrigerant, or the bubble method with a chlorine-free detergent.

WARNING

If a refrigerant leak is detected, remove/extinguish all sources of open flame. If repairing the refrigerant leak requires brazing, remove all of the refrigerant before beginning brazing.

WARNING

The appliance shall be stored in a room without continuously operating ignition sources (i.e., open flames, operating gas appliances, or operating electric heaters).

WARNING

Flammable refrigerant. Do not pierce or burn the tubing or refrigerant containing components.

WARNING

Ensure that there are no live electrical components or exposed wiring when adjusting the charge, recovering the charge, or purging the system. Ensure that the earthing continuity is unbroken.

CAUTION

If an electrical component requires changing, verify that the specifications and intended application match the component being replaced. Electrical components must be free from producing arcs or sparks. Follow the maintenance guidelines in this manual. If in doubt, contact Factory Technical Support.

WARNING

The Refrigerant Detection System activates the circulation airflow. In the event of a refrigerant leak within the airstream, the indoor blower is activated to provide circulation airflow. A mitigation board is provided with an alarm output. Wire all zone dampers and VAV boxes to alarm output to open in the event of a refrigerant leak alarm.

WARNING

To prevent electric shock, which can result in injury or death, the appliance contains an oversized protective earthing (grounding) terminal which must be properly connected at all times.

WARNING

Flammable refrigerant. Be aware that the refrigerant does not contain an odor.

CAUTION

Disconnect the power to the unit before servicing the UV-C lamps.

CAUTION

The doors and panels contain access to UV-C lamps. The lamps have a possible spectral irradiance exceeding 1.7 $\mu W/cm^2$ along with an interlock switch. Do not override the switch.

WARNING

Do not use means to accelerate the defrosting process or cleaning process, other than those recommended in this manual.

CAUTION

Do not use the UV-Clamps outside of the unit.

WARNING

Units containing UV-C Germicidal lamps should not be operated with damage to the cabinet of the unit. UV-C radiation may, even in small doses, cause harm to the eyes and skin.

WARNING

Units with VFD-driven motors/compressors have adjustable overload settings. These are set by the AAON factory for the protection of the motors/compressors and must not be adjusted beyond the factory setpoint or bypassed.

This Page Intentionally Left Blank

4. RZ SERIES FEATURE STRING NOMENCLATURE

The following is an example of the RZ series Feature String

RZA-145-D0-3-CAB0A-00000:N0-AAKAQ-J00-BFT0M-00000-QF-A0AA-00-M0-C-000-80-DA0B-00-000-ABEQ0A-E00000-00000DB

4.1. RZ Series Feature String Description

4.1.1. RZ Model Options Breakdown

Series	MJREV	Unit Size	
RZ	**A**	**- 145 -**	D0-3-CAB0A-00000:N0-AAKAQ-J00-BFT0M-00000-QF-A0AA-00-M0-C-000-80-DA0B-00-000-ABEQ0A-E00000-00000DB

Series And Generation

RZ

Major Revision

A

Unit Size

Air-Cooled

045 = 45-ton Capacity
055 = 55-ton Capacity
065 = 65-ton Capacity
075 = 75-ton Capacity
090 = 90-ton Capacity
105 = 105-ton Capacity
120 = 120-ton Capacity
130 = 130-ton Capacity
140 = 140-ton Capacity
145 = 145-ton Capacity
160 = 160-ton Capacity
180 = 180-ton Capacity
200 = 200-ton Capacity
220 = 220-ton Capacity
240 = 240-ton Capacity

Evaporative Condenser

051 = 51-ton Capacity
066 = 66-ton Capacity
073 = 73-ton Capacity
079 = 79-ton Capacity
101 = 101-ton Capacity
109 = 109-ton Capacity
124 = 124-ton Capacity
136 = 136-ton Capacity
148 = 148-ton Capacity
161 = 161-ton Capacity
172 = 172-ton Capacity
197 = 197-ton Capacity
221 = 221-ton Capacity
241 = 241-ton Capacity
261 = 261-ton Capacity

4.1.2. Model Options Breakdown

		SERIES		MNREV		VLT		
RZA-145	-	D		0	-	3	-	CAB0A-00000:N0-AAKAQ-J00-BFT0M-00000-QF-A0AA-00-M0-C-000-80-DA0B-00-000-ABEQ0A-E00000-00000DB

Series

Air-Cooled

A = 45–75-ton units
B = 90–105-ton units
C = 120–140-ton units
D = 145–180-ton units
E = 200–240-ton units

Evaporative Condenser

A = 51–79-ton units
B = 101–109-ton units
C = 124–148-ton units
D = 161–197-ton units
E = 221–261-ton units

Minor Revision

0 = RZ-075 and higher
A = Only for RZ-045,055,065 changing to two circuits

Voltage

2 = 230V/3Φ/60Hz
3 = 460V/3Φ/60Hz
4 = 575V/3Φ/60Hz
8 = 208V/3Φ/60Hz

4.1.3. Model Options Breakdown

		A1	A2	A3	A4	A5	
RZA-145-D0-3	-	C	A	B	0	A	000000:N0-AAKAQ-J00-BFT0M-00000-QF-A0AA-00-M0-C-000-80-DA0B-00-000-ABEQ0A-E00000-00000DB

Model Option A: Cooling/Heat Pump

A1: Compressor Style

0 = No Compressor
C = R-410A Variable Speed Scroll Compressor
H = R-454B Variable Speed Scroll Compressor

A2: Condenser Style

0 = No Condenser
A = Microchannel Air-Cooled Condenser
H = Evaporative Condenser
N = DX Air Handling Unit

A3: Indoor Coil Configuration

0 = No Cooling Coil
A = Std Row Std Size Evaporator
B = 6 Row Std Size Evaporator
C = Std Row Large Size Evaporator
D = 6 Row Large Size Evaporator
E = 4 Row Chilled Water Coil Std Size
F = 6 Row Chilled Water Coil Std Size
G = 8 Row Chilled Water Coil Std Size
H = 4 Row Chilled Water Coil Large Size
J = 6 Row Chilled Water Coil Large Size
K = 8 Row Chilled Water Coil Large Size

A4: Cooling Heat Exchanger Construction

0 = Standard
A = Polymer E-Coated Cooling Coil
B = Stainless-Steel Cooling Coil Casing
D = Stainless-Steel Cooling Coil Casing + Polymer E = Coated Cooling Coil
E = Polymer E-Coated Cond. Coil
J = Polymer E-Coated Evap. And Cond. Coil
T = Stainless-Steel Cooling Coil Casing + Polymer E- Coated Evap. And Cond. Coil

A5: Cooling Staging

0 = No Cooling
A = Full Face Variable Capacity + Tandem On/Off Refrigeration Systems
E = All Variable Capacity Refrigeration Systems
F = Single Serpentine 8 FPI
G = Half Serpentine 8 FPI
H = Single Serpentine 10 FPI
J = Half Serpentine 10 FPI
K = Single Serpentine 12 FPI
L = Half Serpentine 12 FPI
M = DX Air Handling Unit with 4 Refrigeration Circuits
N = DX Air Handling Unit with 8 Refrigeration Circuits

4.1.4. Model Options Breakdown

		B1	B2	B3	B4	B5		
RZA-145-D0-3-CAB0A	-	0	0	0	0	0	:	N0-AAKAQ-J00-BFT0M-00000-QF-A0AA-00-M0-C-000-80-DA0B-00-000-ABEQ0A-E00000-00000DB

Model Option B: Heating

B1: Heat Type

0 = No Heat
B = Electric Heat
D = Natural Gas Single Rack
E = Natural Gas Double Rack
K = Hot Water Coil
M = Steam Distributing Coil

B2: Heat Construction

0 = Standard
B = Stainless-Steel Heat Exchanger
D = High-Altitude Stainless-Steel Heat Exchanger
G = Polymer E-Coated Heating Coil

B3: Heat Designation

0 = No Heat
1 = Heat 1
2 = Heat 2
3 = Heat 3
4 = Heat 4
5 = Heat 5
6 = Heat 6
7 = Heat 7
8 = Heat 8
A = 1 Row Size A
B = 1 Row Size B
C = 1 Row Size C
D = 1 Row Size D
E = 2 Row Size A
F = 2 Row Size B
G = 2 Row Size C
H = 2 Row Size D

B4: Heat Staging

0 = No Heat
A = 1 Stage
B = 2 Stage
C = 3 Stage
D = 4 Stage
E = 5 Stage
F = 6 Stage
G = 7 Stage
H = 8 Stage
V = 10 Stage
J = 12 Stage
K = Modulating Gas Heat Temp Control
L = High Turndown Modulating Gas Heat - Temperature Control
M = Modulating SCR Electric with Potentiometer Control
N = Modulating SCR Electric with External 0–10 VDC
R = Single Serpentine 10 FPI
S = Half Serpentine 10 FPI

B5: Heat Pump Aux Heating

0 = No Heat Pump

4.1.5. Model Options Breakdown

RZA-145-D0-3-CAB0A-00000 : **N** 0-AAKAQ-J00-BFT0M-00000-QF-A0AA-00-M0-C-000-80-DA0B-00-000-ABEQ0A-E00000-00000DB

1: Unit Orientation

E = Draw Through SA Fan, Walk-in Vestibule, Left-Side Access
F = Draw Through SA Fan, Walk-in Vestibule, Right-Side Access
G = Draw Through Supply Fan, Non-compressorized, End Control Panel, Left Access
H = Draw Through Supply Fan, Non-compressorized, End Control Panel, Right Access
J = Draw Thru Supply Fan, Non-compressorized, Left Control Panel, Left Access
K = Draw Thru Supply Fan, Non-compressorized, Right Control Panel, Right Access
L = Draw Through SA Fan, Non-compressorized, Walk-in Vestibule, Left Access
M = Draw Through SA Fan, Non-compressorized, Walk-in Vestibule, Right Access
N = Blow Through SA Fan, Walk-in Vestibule, Left-Side Access
P = Blow Through SA Fan, Walk-in Vestibule, Right-Side Access
Q = Blow Through Supply Fan, Non-compressorized, End Control Panel, Left Access
R = Blow Through Supply Fan, Non-compressorized, End Control Panel, Right Access
S = Blow Thru Supply Fan, Non-compressorized, Left Control Panel, Left Access
T = Blow Thru Supply Fan, Non-compressorized, Right Control Panel, Right Access
U = Blow Through SA Fan, Non-compressorized, Walk-in Vestibule, Left Access
V = Blow Through SA, Fan Non-compressorized, Walk-in Vestibule, Right Access
W = Draw Thru Supply Fan, End Control Panel, Left-Side Air Tunnel Access
Y = Draw Thru Supply Fan, End Control Panel, Right-Side Air Tunnel Access
Z = Blow Thru Supply Fan. End Control Panel, Left-Side Air Tunnel Access
1 = Blow Thru Supply Fan. End Control Panel, Right-Side Air Tunnel Access

4.1.6. Model Options Breakdown

RZA-145-D0-3-CAB0A-00000:N **0** **2** **-** AAKAQ-J00-BFT0M-00000-QF-A0AA-00-M0-C-000-80-DA0B-00-000-ABEQ0A-E00000-00000DB

2: Supply & Return Locations

0 = Bottom Supply - Bottom Return
1 = End Supply - End Return
A = Bottom Supply - No Return
B = Bottom Supply - Left Return
C = Bottom Supply - Right Return
D = Bottom Supply - End Return
E = Left Supply - No Return
F = Left Supply - Bottom Return
G = Left Supply - Left Return
H = Left Supply - Right Return
J = Left Supply - End Return
K = Right Supply - No Return
L = Right Supply - Bottom Return
M = Right Supply - Left Return
N = Right Supply - Right Return
P = Right Supply - End Return
Q = Top Supply - No Return
R = Top Supply - Bottom Return
S = Top Supply - Left Return
T = Top Supply - Right Return
U = Top Supply - End Return
V = End Supply - No Return
W = End Supply - Bottom Return
Y = End Supply - Left Return
Z = End Supply - Right Return

4.1.7. Model Options Breakdown

		3A	3B	
RZA-145-D0-3-CAB0A-00000:N0	-	**A**	**A**	KAQ-J00-BFT0M-00000-QF-A0AA-00-M0-C-000-80-DA0B-00-000-ABEQ0A-E00000-00000DB

Feature 3: Supply Fan Options

3A: Supply Fan Quantity

0 = 1 Fan
A = 2 Fans
B = 3 Fans
C = 4 Fans
D = 5 Fans
E = 6 Fans
F = 7 Fans
G = 8 Fans
H = 9 Fans
J = 10 Fans
K = 11 Fans
L = 12 Fans

3B: Supply Fan Configuration

0 = No VFDs + Full Width Fan
A = 1 Fan per VFD + Full Width Fan
B = 2 Fans per VFD + Full Width Fan
C = 3 Fans per VFD + Full Width Fan
D = 4 Fans per VFD + Full Width Fan
E = No VFDs + Narrow Width Fan
F = 1 Fan per VFD + Narrow Width Fan
G = 2 Fans per VFD + Narrow Width Fan
H = 3 Fans per VFD + Narrow Width Fan
J = 4 Fans per VFD + Narrow Width Fan
K = Option 0 + Inlet Backdraft Dampers
L = Option A + Inlet Backdraft Dampers
M = Option B + Inlet Backdraft Dampers
N = Option C + Inlet Backdraft Dampers
P = Option D + Inlet Backdraft Dampers
Q = Option E + Inlet Backdraft Dampers
R = Option F + Inlet Backdraft Dampers
S = Option G + Inlet Backdraft Dampers
T = Option H + Inlet Backdraft Dampers
U = Option J + Inlet Backdraft Dampers

4.1.8. Model Options Breakdown

	3C	3D	3E		
RZA-145-D0-3-CAB0A-00000:N0-AA	**K**	**A**	**Q**	**-**	J00-BFT0M-00000-QF-A0AA-00-M0-C-000-80-DA0B-00-000-ABEQ0A-E00000-00000DB

3C: Supply Fan Size

G = 27" Direct Drive Backward Curved Plenum Aluminum
J = 30" Direct Drive Backward Curved Plenum Steel
K = 33" Direct Drive Backward Curved Plenum Steel
L = 36.5" Direct Drive Backward Curved Plenum Aluminum
M = 42.5" Direct Drive Backward Curved Plenum Aluminum
N = 18.5" Direct Drive Airfoil Plenum Aluminum
P = 22" Direct Drive Airfoil Plenum Aluminum
Q = 24" Direct Drive Airfoil Plenum Aluminum
R = 27" Direct Drive Airfoil Plenum Aluminum

3D: Supply Fan Motor Type

0 = High Efficiency Open Motor (1170 nominal rpm)
A = High Efficiency Open Motor (1760 nominal rpm)
K = High Efficiency Totally Enclosed Motor (1170 nominal rpm)
L = High Efficiency Totally Enclosed Motor (1760 nominal rpm)
P = Permanent Magnet AC Totally Enclosed Motor (1760 nominal rpm)

3E: Supply Fan Motor Size

G = 3 hp
H = 5 hp
J = 7.5 hp
K = 10 hp
L = 15 hp
M = 20 hp
N = 25 hp
P = 30 hp
Q = 40 hp
R = 50 hp

4.1.9. Model Options Breakdown

		4A	4B	4C		
RZA-145-D0-3-CAB0A-00000:N0-AAKAQ	-	J	0	0	-	BFT0M-00000-QF-A0AA-00-M0-C-000-80-DA0B-00-000-ABEQ0A-E00000-00000DB

Feature 4: Return/Outside Air Options

4A: Outside Air Section

0 = 100% Outside Air
A = 100% Outside Air with Motorized Dampers
B = Manual Outside Air + Return Air Opening
C = Motorized Outside Air Dampers + Return Air Opening
D = 100% Return Air
E = Economizer
G = Econ + Power Exhaust (Plenum Fans)
J = Econ + Power Return (Plenum Fans)
Q = Econ + Energy Recovery + Bypass Damper
R = Econ + Energy Recovery + Bypass Damper + Power Return (Plenum Fans)

4B: Energy Recovery Type

0 = No Energy Recovery
A = Polymer Energy Recovery Wheel
B = Polymer Energy Recovery Wheel + 1% Purge
C = Aluminum Energy Recovery Wheel
D = Aluminum Energy Recovery Wheel + 1% Purge

4C: Energy Recovery Size

0 = No Energy Recovery
A = Small Enthalpy
B = Medium Enthalpy
C = Large Enthalpy
D = Extra Large Enthalpy
E = Small Sensible
F = Medium Sensible
G = Large Sensible
H = Extra Large Sensible
J = Small Enthalpy + Exhaust Filters
K = Medium Enthalpy + Exhaust Filters
L = Large Enthalpy + Exhaust Filters
M = Extra Large Enthalpy + Exhaust Filters
N = Small Sensible + Exhaust Filters
P = Medium Sensible + Exhaust Filters
Q = Large Sensible + Exhaust Filters
R = Extra Large Sensible + Exhaust Filters

4.1.10. Model Options Breakdown

		5A	5B	
RZA-145-D0-3-CAB0A-00000:N0-AAKAQ-J00	-	**B**	**F**	T0M-00000-QF-A0AA-00-M0-C-000-80-DA0B-00-000-ABEQ0A-E00000-00000DB

Feature 5: Return Fan Options

5A: Return Fan Quantity

0 = No Return Fan
A = 1 Fan
B = 2 Fans
C = 3 Fans
D = 4 Fans

5B Return Fan Configuration

0 = No Return Fan
A = No VFDs + Full Width Fan
B = 1 Fan per VFD + Full Width Fan
C = 2 Fans per VFD + Full Width Fan
D = 3 Fans per VFD + Full Width Fan
E = 4 Fans per VFD + Full Width Fan
F = No VFDs + Narrow Width Fan
G = 1 Fan per VFD + Narrow Width Fan
H = 2 Fans per VFD + Narrow Width Fan
J = 3 Fans per VFD + Narrow Width Fan
K = 4 Fans per VFD + Narrow Width Fan
L = Option A + Inlet Backdraft Dampers
M = Option B + Inlet Backdraft Dampers
N= Option C + Inlet Backdraft Dampers
P = Option D + Inlet Backdraft Dampers
Q = Option E + Inlet Backdraft Dampers
R = Option F + Inlet Backdraft Dampers
S = Option G + Inlet Backdraft Dampers
T = Option H + Inlet Backdraft Dampers
U = Option J + Inlet Backdraft Dampers
V = Option K + Inlet Backdraft Dampers

4.1.11. Model Options Breakdown

	5C	5D	5E		
RZA-145-D0-3-CAB0A-00000:N0-AAKAQ-J00-BF	T	0	M	-	00000-QF-A0AA-00-M0-C-000-80-DA0B-00-000-ABEQ0A-E00000-00000DB

5C: Return Fan Size

0 = No Return Fan
N = 27" Direct Drive Backward Curved Plenum Aluminum
Q = 30" Direct Drive Backward Curved Plenum Steel
R = 33" Direct Drive Backward Curved Plenum Steel
S = 36.5" Direct Drive Backward Curved Plenum Aluminum
T = 42.5" Direct Drive Backward Curved Plenum Aluminum
U = 18.5" Direct Drive Airfoil Plenum Aluminum
V = 22" Direct Drive Airfoil Plenum Aluminum
W = 24" Direct Drive Airfoil Plenum Aluminum
Y = 27" Direct Drive Airfoil Plenum Aluminum

5D: Return Fan Motor Type

0 = No Return Fan
A = High Efficiency Open Motor (1170 nominal rpm)
B = High Efficiency Open Motor (1760 nominal rpm)
L = High Efficiency Totally Enclosed Motor (1170 nominal rpm)
M = High Efficiency Totally Enclosed Motor (1760 nominal rpm)
P = Permanent Magnet AC Totally Enclosed Motor (1170 nominal rpm)
Q = Permanent Magnet AC Totally Enclosed Motor (1760 nominal rpm)

5E: Return Motor Size

0 = No Return Fan
H = 3 hp
J = 5 hp
K = 7.5 hp
L = 10 hp
M = 15 hp
N = 20 hp
P = 25 hp
Q = 30 hp
R = 40 hp

4.1.12. Model Options Breakdown

		6A	6B	6C	6D	6E		
RZA-145-D0-3-CAB0A-00000:N0-AAKAQ-J00-BFT0M	-	0	0	0	0	0	-	00-QF-A0AA-00-M0-C-000-80-DA0B-00-000-ABEQ0A-E00000-00000DB

Feature 6: Exhaust Fan Options

6A: Exhaust Fan Quantity

0 = No Exhaust Fan
A = 1 Fan
B = 2 Fans

6B: Exhaust Fan Configuration

0 = No Exhaust Fan
A = No VFDs + Full Width Fan
B = 1 Fan per VFD + Full Width Fan
C = 2 Fans per VFD + Full Width Fan
D = 3 Fans per VFD + Full Width Fan
E = 4 Fans per VFD + Full Width Fan
F = No VFDs + Narrow Width Fan
G = 1 Fan per VFD + Narrow Width Fan
H = 2 Fans per VFD + Narrow Width Fan
J = 3 Fans per VFD + Narrow Width Fan
K = 4 Fans per VFD + Narrow Width Fan
L = Option A + Inlet Backdraft Dampers
M = Option B + Inlet Backdraft Dampers
N = Option C + Inlet Backdraft Dampers
P = Option D + Inlet Backdraft Dampers
Q = Option E + Inlet Backdraft Dampers
R = Option F + Inlet Backdraft Dampers
S = Option G + Inlet Backdraft Dampers
T = Option H + Inlet Backdraft Dampers
U = Option J + Inlet Backdraft Dampers
V = Option K + Inlet Backdraft Dampers

6C: Exhaust Fan Size

0 = No Exhaust Fan
N = 27" Direct Drive Backward Curved Plenum Aluminum
Q = 30" Direct Drive Backward Curved Plenum Steel
R = 33" Direct Drive Backward Curved Plenum Steel

6C: Exhaust Fan Size (Continued)

S = 36.5" Direct Drive Backward Curved Plenum Aluminum
T = 42.5" Direct Drive Backward Curved Plenum Aluminum
U = 18.5" Direct Drive Airfoil Plenum Aluminum
V = 22" Direct Drive Airfoil Plenum Aluminum
W = 24" Direct Drive Airfoil Plenum Aluminum
Y = 27" Direct Drive Airfoil Plenum Aluminum

6D: Exhaust Fan Motor Types

0 = No Exhaust Fan
A = High Efficiency Open Motor (1170 nominal rpm)
B = High Efficiency Open Motor (1760 nominal rpm)
L = High Efficiency Totally Enclosed Motor (1170 nominal rpm)
M = High Efficiency Totally Enclosed Motor (1760 nominal rpm)
P = Permanent Magnet AC Totally Enclosed Motor (1170 nominal rpm)
Q = Permanent Magnet AC Totally Enclosed Motor (1760 nominal rpm)

6E: Exhaust Motor Size

0 = No Exhaust Fan
H = 3 hp
J = 5 hp
K = 7.5 hp
L = 10 hp
M = 15 hp
N = 20 hp
P = 25 hp
Q = 30 hp
R = 40 hp

4.1.13. Model Options Breakdown

		7	8		
RZA-145-D0-3-CAB0A-00000:N0-AAKAQ-J00-BFT0M-00000	-	**Q**	**F**	-	A0AA-00-M0-C-000-80-DA0B-00-000-ABEQ0A-E00000-00000DB

7: O/A Control

0 = Standard (No Actuator)
C = Fully Modulating Actuator - Sensible Limit
D = Fully Modulating Actuator - Enthalpy Limit
E = DDC Actuator
P = Option C + CO_2 Override
Q = Option D + CO_2 Override
R = Option E + CO_2 Override
U = 2 Position Actuator
V = Fault Detection and Diagnostics Controller (FDD) Sensible Limit
W = FDD Enthalpy Limit
Y = Option V + CO_2 Override
Z = Option W + CO_2 Override

8: Return & Exhaust Options

0 = No Return Opening
A = Standard Return Opening without EA Dampers
B = Large Return Opening without EA Dampers
C = Standard Return Opening + Barometric Relief EA Dampers
D = Large Return Opening + Barometric Relief EA Dampers
E = Standard Return Opening + Motorized EA Dampers
F = Large Return Opening + Motorized EA Dampers
G = Standard Return Opening without EA Dampers + Standard RA Bypass (Field Bypass Filter Required)

8: Return & Exhaust Options(Continued)

H = Large Return Opening without EA Dampers + Standard RA Bypass (Field Bypass Filter Required)
J = Standard Return Opening + Barometric Relief EA Dampers + Standard RA Bypass (Field Bypass Filter Required)
K = Large Return Opening + Barometric Relief EA Dampers + Standard RA Bypass (Field Bypass Filter Required)
L = Standard Return Opening + Motorized EA Dampers + Standard RA Bypass (Field Bypass Filter Required
M = Large Return Opening + Motorized EA Dampers + Standard RA Bypass (Field Bypass Filter Required)
N = Standard Return Opening without EA Dampers + Large RA Bypass (Field Bypass Filter Required)
P = Large Return Opening without EA Dampers + Large RA Bypass (Field Bypass Filter Required)
Q = Standard Return Opening + Barometric Relief EA Dampers + Large RA Bypass (Field Bypass Filter Required)
R = Large Return Opening + Barometric Relief EA Dampers + Large RA Bypass (Field Bypass Filter Required)
S = Standard Return Opening + Motorized EA Dampers + Large RA Bypass (Field Bypass Filter Required)
T = Large Return Opening + Motorized EA Dampers + Large RA Bypass (Field Bypass Filter Required)

4.1.14. Model Options Breakdown

		9A	9B	
RZA-145-D0-3-CAB0A-00000:N0-AAKAQ-J00-BFT0M-00000-QF	-	A	0	AA-00-M0-C-000-80-DA0B-00-000-ABEQ0A-E00000-00000DB

Feature 9: Filter Options

9A: Unit Filter Type

0 = 2" Pleated MERV 8
A = 4" Pleated MERV 8
B = 2" Pleated MERV 8 + 4" Pleated MERV 11
C = 2" Pleated MERV 8 + 4" Pleated MERV 13
D = 2" Pleated MERV 8 + 4" Pleated MERV 14
E = 4" Pleated MERV 8 + 4" Pleated MERV 11
F = 4" Pleated MERV 8 + 4" Pleated MERV 13
G = 4" Pleated MERV 8 + 4" Pleated MERV 14
H = 2" Pleated MERV 8 + 12" Cartridge MERV 11
J = 2" Pleated MERV 8 + 12" Cartridge MERV 13
K = 2" Pleated MERV 8 + 12" Cartridge MERV 14
L = 4" Pleated MERV 8 + 12" Cartridge MERV 11
M = 4" Pleated MERV 8 + 12" Cartridge MERV 13
N = 4" Pleated MERV 8 + 12" Cartridge MERV 14
P = 2" Pleated MERV 8 + 30" Bag MERV 13
Q = 2" Pleated MERV 8 + 30" Bag MERV 14
R = 4" Pleated MERV 8 + 30" Bag MERV 13
S = 4" Pleated MERV 8 + 30" Bag MERV 14
W = 4” MERV 8 + 12” 99.97 HEPA

9B: Unit filter Box Size/Location

0 = Standard Filters in Standard Position
A = Standard Filters in Pre-position
B = High Eff Filters Box A in Standard Position
C = High Eff Filters Box B in Standard Position
D = High Eff Filters Box C in Standard Position
E = High Eff Filters Box A in Pre-Position
F = High Eff Filters Box B in Pre-Position
G = High Eff Filters Box C in Pre-Position
H = Dual Angled Filter Racks Box A in Standard Position
J = Dual Angled Filter Racks Box B in Standard Position
K = Dual Angled Filter Racks Box A in Pre-Position
L = Dual Angled Filter Racks Box B in Pre-Position
N = HEPA Filters Box A in Standard Position
P = HEPA Filters Box B in Standard Position
Q = HEPA Filters Box A in Pre-position
R = HEPA Filters Box B in Pre-position

4.1.15. Model Options Breakdown

	9C	9D		
RZA-145-D0-3-CAB0A-00000:N0-AAKAQ-J00-BFT0M-00000-QF-A0	**A**	**A**	**-**	00-M0-C-000-80-DA0B-00-000-ABEQ0A-E00000-00000DB

9C: Final Filter Type

0 = No Final Filters
A = 12" Cartridge MERV 13-Filter Box A
B = 12" Cartridge MERV 13-Filter Box B
C = 12" Cartridge MERV 13-Filter Box C
D = 12" Cartridge MERV 14-Filter Box
E = 12" Cartridge MERV 14-Filter Box B
F = 12" Cartridge MERV 14-Filter Box C
G = 30" Bag MERV 13-Filter Box A
H = 30" Bag MERV 13-Filter Box B
J = 30" Bag MERV 13-Filter Box C
K = 30" Bag MERV 14-Filter Box A
L = 30" Bag MERV 14-Filter Box B
M = 30" Bag MERV 14-Filter Box C
N = HEPA Frame (No Filter)-Filter Box A
P = HEPA Frame (No Filter)-Filter Box B
Q = 12" 99.97 HEPA-Filter Box A
R = 12" 99.97 HEPA-Filter Box B

9D: Filter Options

0 = None
A = Clogged Filter Switch - Unit Filters
B = Clogged Filter Switch - Unit + Energy Recovery Filters
C = Clogged Filter Switch - Unit + Final Filters
D = Clogged Filter Switch - Unit + Energy Recovery + Final Filters
E = Magnehelic Gauge - Unit Filters
F = Magnehelic Gauge - Unit + Energy Recovery Filters
G = Magnehelic Gauge - Unit + Final Filters
H = Magnehelic Gauge - Unit + Energy Recovery + Final Filters
J = CFS + Magnehelic Gauge - Unit Filters
K = CFS + Magnehelic Gauge - Unit + Energy Recovery Filters
L = CFS + Magnehelic Gauge - Unit + Final Filters
M = CFS + Magnehelic Gauge - Unit + Energy Recovery + Final Filter

4.1.16. Model Options Breakdown

		10A	10B		11A	11B		12		
RZA-145-D0-3-CAB0A-00000:N0-AAKAQ-J00-BFT0M-00000-QF-A0AA	-	**0**	**0**	-	**M**	**0**	-	**C**	-	000-80-DA0B-00-000-ABEQ0A-E00000-00000DB

Feature 10: Refrigeration Control

10A: Refrigeration Control A

0 = Standard
E = Freeze Stats (each circuit)

10B: Refrigeration Control B

0 = Standard

Feature 11: Refrigeration Options

11A: Refrigeration Options A

0 = Standard
D = Hot Gas Bypass Non-Variable Compressor Circuits (HGBNV)
E = Modulating Hot Gas Reheat [MHGR]
M = HGBNV + MHGR
Q = Polymer E-Coated MHGR
W = HGBNV + Polymer E-Coated MHGR

11B: Refrigeration Options B

0 = Standard Packaged Unit

12: Refrigeration Accessories

0 = Standard
B = Compressor Isolation Valves
C = Sight Glass + Compressor Isolation Valves
F = Option B + Variable Circuits -20°F Low Ambient [Size 075 & Series B, C, D, E]
F = Option B + Lead Circuit -20°F Low Ambient [Size 045, 055, & 065]
G = Option C + Variable Circuits -20°F Low Ambient [Size 075 & Series B, C, D, E]
G = Option C + Lead Circuit -20°F Low Ambient [Size 045, 055, & 065]
K = Option B + Tandem Circuits -20°F Low Ambient [Size 075 & Series B, C, D, E]
K = Option B + Lag Circuit -20°F Low Ambient [Size 045, 055, & 065]
L = Option C + Tandem Circuits -20°F Low Ambient [Size 075 & Series B, C, D, E]
L = Option C + Lag Circuit -20°F Low Ambient [Size 045, 055, & 065]
P = Option B + All Circuits -20°F Low Ambient
Q = Option C + All Circuits -20°F Low Ambient

4.1.17. Model Options Breakdown

		13A	13B	13C		
RZA-145-D0-3-CAB0A-00000:N0-AAKAQ-J00-BFT0M-00000-QF-A0AA-00-M0-C	-	**0**	**0**	**0**	-	00-80-DA0B-00-000-ABEQ0A-E00000-00000DB

Feature 13: Power Options

13A: Unit Disconnect Type

0 = Single Point Power - Standard Power Block
A = Single Point Power - Non-fused Disconnect Power Switch
B = Single Point Power - Circuit Breaker
C = Dual Point Power - Standard Power Block - Method #1
D = Dual Point Power - Non-Fused Disconnect Power Switch - Method #1
E = Dual Point Power - Circuit Breaker - Method #1
F = Dual Point Power - Standard Power Block - Method #2
G = Dual Point Power - Non-Fused Disconnect Power Switch - Method #2
H = Dual Point Power - Circuit Breaker - Method #2
J = Dual Point Power - Standard Power Block - Method #3
K = Dual Point Power - Non-Fused Disconnect Power Switch - Method #3
L = Dual Point Power - Circuit Breaker - Method #3
M = Dual Point Power - Standard Power Block - Method #4
N = Dual Point Power - Non-Fused Disconnect Power Switch - Method #1
P = Dual Point Power - Circuit Breaker - Method #1

13B: Disconnect 1 Size / 13C: Disconnect 2 Size

0 = Power Block
A = 15 amps
B = 20 amps
C = 25 amps
D = 30 amps
E = 35 amps
F = 40 amps
G = 45 amps
H = 50 amps
J = 60 amps
K = 70 amps
L = 80 amps
M = 90 amps
N = 100 amps
P = 110 amps
Q = 125 amps
R = 150 amps
S = 175 amps
T = 200 amps
U = 225 amps
V = 250 amps
W = 300 amps
Y = 350 amps
Z = 400 amps
1 = 450 amps
2 = 500 amps
3 = 600 amps
4 = 700 amps
5 = 800 amps
6 = 1000 amps
7 = 1200 amps

4.1.18. Model Options Breakdown

		14	15		
RZA-145-D0-3-CAB0A-00000:N0-AAKAQ-J00-BFT0M-00000-QF-A0AA-00-M0-C-000	-	**8**	**0**	-	DA0B-00-000-ABEQ0A-E00000-00000DB

14: Safety Options

0 = Standard
A = RA & SA Firestat
B = RA Smoke Detector
C = SA Smoke Detector
D = High Supply Air Static Pressure Switch
E = Remote Safety Shutdown Terminals
F = Option A + B
G = Option A + C
H = Option A + D
J = Option A + E
K = Option B + C
L = Option B + D
M = Option B + E
N = Option C + D
P = Option C + E
Q = Option D + E
R = Option A + B + C
S = Option A + B + D
T = Option A + B + E
U = Option A + C + D
V = Option A + C + E
W = Option A + D + E
Y = Option B + C + D
Z = Option B + C + E
1 = Option B + D + E
2 = Option C + D + E
3 = Option A + B + C + D
4 = Option A + B + C + E
5 = Option A + B + D + E
6 = Option A + C + D + E
7 = Option B + C + D + E
8 = Option A + B + C + D + E

15: Electrical Accessories

0 = Standard
B = Phase & Brown Out Protection
C = Air Disinfection UV Lights
E = Compressor Sound Blankets
K = Option B + C
M = Option B + E
P = Option C + E
Z = Option B + C + E

4.1.19. Model Options Breakdown

		16A	16B	16C	16D		
RZA-145-D0-3-CAB0A-00000:N0-AAKAQ-J00-BFT0M-00000-QF-A0AA-00-M0-C-000-80	-	D	A	0	B	-	00-000-ABEQ0A-E00000-00000DB

Feature 16: Unit Controls

16A: Control Sequence

0 = Standard Terminal Block for Thermostat
A = Terminal Block for Thermostat + Isolation Relays
B = Single Zone VAV Unit Controller - VAV Cool + CAV Heat
C = Single Zone VAV Unit Controller - VAV Cool + VAV Heat
D = VAV Unit Controller - VAV Cool + CAV Heat
E = Constant Air Volume Unit Controller - CAV Cool + CAV Heat
F = Makeup Air Unit Controller
M = Field-Installed DDC Controls by Others
N = Field-Installed DDC Controls + Installation Relays
P = Factory-Installed DDC Controls by Others + Installation Relays (Requires SPA)
Q = DX-DOAS Controls

16B: Control Supplier

0 = Standard
A = AAON Controls
C = AAON Controls Supervisory

16C: Control Supplier Options

0 = Standard

16D: BMS Connection & Diagnostics

0 = None
B = BACnet MSTP
K = BACnet MSTP with Diagnostics

4.1.20. Model Options Breakdown

		17A	17B		
RZA-145-D0-3-CAB0A-00000:N0-AAKAQ-J00-BFT0M-00000-QF-A0AA-00-M0-C-000-80-DA0B	-	**0**	**0**	-	000-ABEQ0A-E00000-00000DB

Feature 17: Preheat Options

17A: Preheat Configuration

0 = No Preheat
F = Hot Water Coil Preheat in Option Box
G = Steam Distributing Coil Preheat in Option Box
M = Polymer Coated Hot Water Coil Preheat in Option Box
N = Polymer Coated Steam Distributing Coil Preheat in Option Box
P = Direct-Fired Heat 100% OA Nat Gas (CAV)

Hot Water Preheat Coil [17A = F, M]

A = Size A 1 Row Half Serpentine 10 FPI
B = Size B 1 Row Half Serpentine 10 FPI
C = Size C 1 Row Half Serpentine 10 FPI
D = Size D 1 Row Half Serpentine 10 FPI
E = Size A 1 Row Quarter Serpentine 10 FPI
F = Size B 1 Row Quarter Serpentine 10 FPI
G = Size C 1 Row Quarter Serpentine 10 FPI
H = Size D 1 Row Quarter Serpentine 10 FPI
J = Size A 2 Row Full Serpentine 10 FPI
K = Size B 2 Row Full Serpentine 10 FPI
L = Size C 2 Row Full Serpentine 10 FPI
M = Size D 2 Row Full Serpentine 10 FPI
N = Size A 2 Row Half Serpentine 10 FPI
P = Size B 2 Row Half Serpentine 10 FPI
Q = Size C 2 Row Half Serpentine 10 FPI
R = Size D 2 Row Half Serpentine 10 FPI

Steam Distributing Preheat Coil [17A = G, N]

A = Size A 1 Row Full Serpentine 10 FPI
B = Size B 1 Row Full Serpentine 10 FPI
C = Size C 1 Row Full Serpentine 10 FPI
D = Size D 1 Row Full Serpentine 10 FPI
J = Size A 2 Row Full Serpentine 10 FPI
K = Size B 2 Row Full Serpentine 10 FPI
L = Size C 2 Row Full Serpentine 10 FPI
M = Size D 2 Row Full Serpentine 10 FPI

Direct-Fired Heat [17A = P]

A = 1' Burner
B = 1.5' Burner
C = 2' Burner
D = 2.5' Burner
E = 3' Burner
F = 4' Burner
G = 4.5' Burner
H = 5.5' Burner
J = 6' Burner
K = 7' Burner
L = 7.5' Burner
M = 8.5' Burner

17B: Preheat Sizing

0 = No Preheat

4.1.21. Model Options Breakdown

		18A	18B	
RZA-145-D0-3-CAB0A-00000:N0-AAKAQ-J00-BFT0M-00000-QF-A0AA-00-M0-C-000-80-DA0B-00	-	**0**	**0**	0-ABEQ0A-E00000-00000DB

Feature 18: Option Boxes

18A: Box Location

0 = No Option Box
A = One Option Box after Return
B = One Option Box after Pre-Filter
C = One Option Box after Cooling
D = One Option Box after Supply Fan
E = One Option Box after Heat
F = One Option Box after Return + One after Pre-Filter
G = One Option Box after Return + One after Cooling
H = One Option Box after Return + One after Supply Fan
J = One Option Box after Return + One after Heat
K = One Option Box after Pre-Filter + One after Cooling
L = One Option Box after Pre-Filter + One after Supply Fan
M = One Option Box after Pre-Filter + One after Heat
N = One Option Box after Cooling + One after Supply Fan
P = One Option Box after Cooling + One after Heat
Q = One Option Box after Supply Fan + One after Heat
R = Additional Vestibule
S = 2 ft First Box
T = 2 ft First Box + 2ft Second Box
U = 2 ft First Box + 4ft Second Box
V = 2 ft First Box + 6ft Second Box
W = 2 ft First Box + 8ft Second Box
Y = 2 ft First Box + 8ft Second Box

18B: Box Size

0 = No Option Box
A = 2 ft First Box
B = 2 ft First Box + 2ft Second Box
C = 2 ft First Box + 4ft Second Box
D = 2 ft First Box + 6ft Second Box
E = 2 ft First Box + 8ft Second Box
F = 4 ft First Box
G = 4 ft First Box + 2ft Second Box
H = 4 ft First Box + 4ft Second Box
J = 4 ft First Box + 6ft Second Box
K = 4 ft First Box + 8ft Second Box
L = 6 ft First Box
M = 6 ft First Box + 2ft Second Box
N = 6 ft First Box + 4ft Second Box
P = 6 ft First Box + 6ft Second Box
Q = 6 ft First Box + 8ft Second Box
R = 8 ft First Box
S = 8 ft First Box + 2ft Second Box
T = 8 ft First Box + 4ft Second Box
U = 8 ft First Box + 6ft Second Box
V = 8 ft First Box + 8ft Second Box

4.1.22. Model Options Breakdown

	18C		19	
RZA-145-D0-3-CAB0A-00000:N0-AAKAQ-J00-BFT0M-00000-QF-A0AA-00-M0-C-000-80-DA0B-00-00	**0**	**-**	**A**	BEQ0A-E00000-00000DB

18C: Box Accessories

0 = None
A = 20" Drain Pan in First Box
B = 20" Drain Pan in First Box + 20" Drain Pan in Second Box
C = 20" Drain Pan in First Box + 44" Drain Pan in Second Box
D = Option A + Sound Attenuator
E = 44" Drain Pan in First Box
F = 44" Drain Pan in First Box + 20" Drain Pan in Second Box
G = 44" Drain Pan in First Box + 44" Drain Pan in Second Box
H = Option E + Sound Attenuator
J = Sound Attenuator in First Box
K = Option J + 20" Dain Pan in Second Box
L =Option J + 44" Drain Pan in Second Box
M = Sound Attenuator in First Box + Sound Attenuator in Second Box
N = Empty First Box + 20" Drain Pan in Second Box
P = Empty First Box + 44" Drain Pan in Second Box
Q =Empty First Box + Sound Attenuator in Second Box
S = Air Mixer in First Box
T = Option S + 20" Drain Pan in Second Box
U = Option S + 44" Drain Pan in Second Box
V = Option S + Sound Attenuator in Second Box

19: Outside Air Accessories

0 = No Outside Air Hood - 100% Return Air
A = Outside Air Hood
B = Outside Air Hood with Metal Mesh Filters
C = Outside Air Hood + Outside Air Flow Measuring Station
G = Option B + C

4.1.23. Model Options Breakdown

	20	21	22	23	
RZA-145-D0-3-CAB0A-00000:N0-AAKAQ-J00-BFT0M-00000-QF-A0AA-00-M0-C-000-80-DA0B-00-000-A	**B**	**E**	**Q**	**0**	A-E00000-00000DB

20: Cabinet Options

0 = Standard
B = SA & RA Burglar Bars
C = SA & RA Walkable Safety Grates
D = Perforated Line for SA Fans
E = Perforated Liner for RA Fans
L = Option B + D
M = Option B + E
N = Option C + D
P = Option C + E
Q = Option D + E
1 = Option B + D + E
2 = Option C + D + E

21: Accessories

0 = None
B = Motorized Service Vestibule Fresh Air
C = Supply Fan Air Flow Measuring
D = Return Fan Air Flow Measuring
E = Access Door Windows
K = Option B + C
L = Option B + D
M = Option B + E
N = Option C + D
P = Option C + E
Q = Option D + E
Y = Option B + C + D
Z = Option B + C + E
1 = Option B + D + E
2 = Option C + D + E
7 = Option B + C + D + E

22: Maintenance Accessories

0 = Standard
A = Factory-Wired 115V Convenience Outlet
B = Field-Wired 115V Convenience Outlet
C = Service Lights
D = Remote Start/Stop contacts
E = Supply Fan Auxiliary Contacts
F = Option A + C
G = Option A + D
H = Option A + E
J = Option B + C
K = Option B + D
L = Option B + E
M = Option C + D
N = Option C + E
P = Option D + E
Q = Option A + C + D
R = Option A + C + E
S = Option A + D + E
T = Option B + C + D
U = Option B + C + E
V = Option B + D + E
W = Option C + D + E
Y = Option A + C + D + E
Z = Option B + C + D + E

23: Code Options

0 = Standard - ETL U.S.A. Listing
A = Chicago Code
B = ETL U.S.A. + Canada Listing

4.1.24. Model Options Breakdown

	24		25	26	27	28	29	30		
RZA-145-D0-3-CAB0A-00000:N0-AAKAQ-J00-BFT0M-00000-QF-A0AA-00-M0-C-000-80-DA0B-00-000-ABEQ0	A	-	E	0	0	0	0	0	-	00000DB

24: Shipping Splits

0 = Standard
A = Two Piece Unit
D = Two Piece Unit (Refrigeration Split)

25: Air Cooled Condenser Accessories

0 = Standard
E = VFD Condenser Fan Head Pressure Control
K = Low Sound Condenser Fan Head Pressure Control

26: Evaporative Condenser Accessories

0 = No Evaporative Condenser
A = No sump or vestibule heat
B = Sump & vestibule heaters

27: Water - Cooled Condenser Accessories

0 = No Water-Cooled Condenser

28: Energy Recovery Wheel Accessories

0 = None
A = Energy Recovery Wheel Defrost Start/Stop
B = Energy Recovery Wheel Rotation Detection
D = Powder Coated Energy Recovery Wheel
E = VFD for Heat Wheel Motor (Field Control)
F = Energy Recovery Wheel Defrost Start/Stop + Rotation Detection
M = Option B + E

29: VFD Options

0 = None
A = Shaft grounding on all SA, RA, EA motors
C = BACnet VFD on all motors

30: Miscellaneous Options

0 = None
A = High Condensate Level Switch
S = Additional Vestibule Heater
T = Option A + S

4.1.25. Model Options Breakdown

		31	32	33	34	35	36	37
RZA-145-D0-3-CAB0A-00000:N0-AAKAQ-J00-BFT0M-00000-QF-A0AA-00-M0-C-000-80-DA0B-00-000-ABEQ0A-E0000	-	0	0	0	0	0	D	B

31: Blank

0 = Standard

32: Blank

0 = Standard

33: Blank

0 = Standard

34: Blank

0 = Standard

35: Warranty

0 = Standard Warranty
A = 2-Year Parts Warranty
B = 5-Year Parts Warranty
C = 10-Year Parts Warranty

36: Cabinet Material

D = Galvanized Cabinet - Double Wall + R-13 Foam Insulation + 6" Base Rail + Double Sloped Roof

37: Specials & Paint

B = Premium AAON Gray Paint Exterior
D = Premium AAON Gray Paint Exterior + Interior Corrosion Protection
G = Premium AAON Gray Paint Exterior + Interior Corrosion Protection + Shrink Wrap
X = SPA + Premium AAON Gray Paint Exterior
Z = SPA + Premium AAON Gray Paint Exterior + Interior Corrosion Protection
3 = SPA + Premium AAON Gray Paint Exterior + Interior Corrosion Protection + Shrink Wrap
4 = SPA + Special Exterior Paint Color
6 = SPA + Special Exterior Paint Color + Interior Corrosion Protection
9 = SPA + Special Exterior Paint Color + Interior Corrosion Protection + Shrink Wrap

5. GENERAL INFORMATION

RZ Series package rooftop and outdoor air handling units are for outdoor installation only. A minimum of a 12-inch-high curb is required for installation on combustible roofs. RZ series units are intended for installation up to 3500 meters (11,500 ft).

WARNING

Improper installation, adjustment, alteration, service, or maintenance can cause property damage, personal injury, or loss of life.

WARNING

During construction, these units must not be used for heating or cooling. Very low return air temperatures, harmful vapors, and the misplacement of the filters will damage the unit and its efficiency.

5.1. Certification of Gas Heat Models

- The RZ Series gas heat exchangers are certified as a Category III forced air furnace for use with or without cooling, located downstream of the indoor coil.
- AAON gas heat exchangers operate for a minimum of 10,000 cycles.
- Individual RZ Series gas heat exchangers are designed for 400 MBH and 350 MBH input rates and can be configured for up to a 4500 MBH total gas input rating (the maximum input rates vary by selected heating feature).
- Modulating gas heat exchangers are designed for a 3:1 turndown of the 320 MBH input rate available on the first stage of heating.

5.2. Certification of Steam or Hot Water Heat Models

- Certified as a forced air heating system with or without cooling.
- RZ Series hot water coils are designed for operation with no more than 82.2°C (180°F) water at a 1034 kPa (150 psig) working pressure.
- RZ Series steam coils are designed for operation at a 1034 kPa (150 psig) working pressure.

5.3. Certification of Electric Heat Models

- RZ Series electric warm air furnaces are certified for use with or without cooling, located downstream of the indoor coil.
- RZ Series electric warm air furnaces are designed with individual 40 KW electric heating elements that can be configured for up to 240 KW of electric heat (maximum output varies by selected heating features).
- Modulating electric heat exchangers are equipped with Silicon Control Rectifiers (SCR) on the first stage of heating.

5.4. Certification of Cooling Models

- RZ Series R-454B refrigerant systems are certified as commercial central air conditioners with or without electrically operated compressors.
- RZ Series chilled water coils are designed for operation at a 1034 kPa (150 psig) working pressure.

5.5. Codes and Ordinances

CAUTION

The Clean Air Act of 1990 bans the intentional venting of refrigerant as of July 1, 1992. Approved methods of recovery, recycling, or reclaiming must be followed.

The RZ Series has been tested and certified by Intertek (ETL) to the following safety standards:

ANSI Z21.47-2016/CSA 2.3-2016

Gas-Fired Central Furnaces

ANSI Z83.8-2016/CSA 2.6-2016

Gas unit heaters, gas packaged heaters, gas utility heaters, and gas-fired duct furnaces.

UL 60335-2-40 4th Edition 2022

Safety standard for A2L units

The system must be sized in accordance with practices described in the American Society of Heating, Refrigeration, and Air Conditioning Engineers Handbooks.

AAON equipment must be installed in accordance with this manual and the International Code Council (ICC) requirements.

The installation of RZ Series units must conform to the International Code Council (ICC) standards of the International Mechanical Code, the International Building Code, and local building, plumbing, and wastewater codes. In the absence of local codes, the installation must conform to the current National Fuel Code ANSI Z223.1/NFPA 54 or the National Gas & Propane Installation Code CSA B149.1, and CSA B52 Mechanical Refrigeration Code. All appliances must be electrically grounded in accordance with local codes, or in the absence of local codes, the

WARNING

Care must be taken when working with coils and sheet metal surfaces, as they contain sharp edges.

National Electric Code, ANSI/NFPA 70, and/or the Canadian Electrical Code (CSA C22.1).

WARNING

Failure to observe the following instructions will result in the premature failure of your system and possible voiding of the unit's warranty.

5.6. Receiving Unit

When received, the unit must be checked for damage that might have occurred in transit. If damage is found, it must be noted on the carrier's Freight Bill. A request for inspection by the carrier's agent must be made in writing at once. The nameplate must be checked to ensure the correct model sizes and voltages have been received to match the requirements of the job.

If repairs must be made to damaged goods, notify the factory before any repairs are done to protect the warranty. Certain equipment alterations, repairs, and manipulations of the equipment, without the manufacturer's consent, may void the product warranty. Contact the AAON Warranty Department for assistance with handling damaged goods, repairs, and freight claims: (918) 382-6450.

Note: Upon receipt, check the shipment for items that ship loose, such as filters and remote sensors. Consult the order and shipment documentation to identify any loose-shipped items. Loose-shipped items may have been placed inside the unit cabinet for security. Installers and owners must secure all doors with locks or nuts and bolts to prevent unauthorized access.

5.7. Storage

If the unit installation does not occur immediately following the delivery, store the equipment in a dry, protected area away from construction traffic and in the proper orientation as marked on the packaging with all internal packaging in place. Secure all loose-shipped items. Refer to Table 15 for minimum floor areas if the unit is stored in an unventilated space. The unit must be stored in accordance with ASHRAE 15 requirements for machine rooms.

5.8. Access Doors

Lockable access doors are provided to the services vestibule and to sections of the unit which may require maintenance or servicing. After the startup is completed, use locks to prevent unauthorized access.

A separate access door is also provided, leading to the evaporator and pumping package compartment. See the maintenance section for information on checking these doors for leaks.

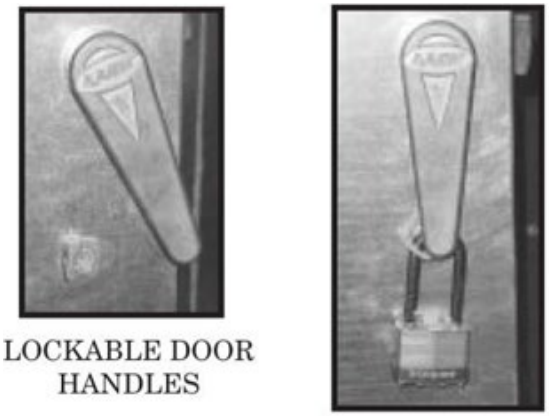

Figure 1: Lockable Door Handles

Wiring Diagrams

Unit-specific wiring diagrams are laminated and affixed inside the Controls department door.

5.9. Installation

AAON equipment is designed to be easily installed and serviced.

5.9.1. Locating Units

The curb must be mounted first and located so the duct connections are clear of the structural members of the building.

Verify that the rooftop or foundation can support the total unit weight, including accessory weights. If the unit is installed indoors or in areas without sufficient ventilation, provide venting from all pressure relief outlets to the outdoors in accordance with ASHRAE-15 requirements.

WARNING

When locating gas-fired units, the unit should be installed so the flue discharge vents are located at least 305 cm (120 inches) away from any opening through which combustion products could enter the building.

Do not position the flue opening to discharge into a fresh air intake of any other piece of equipment. The unit must be installed so the flow of the combustion intake air is not prevented from reaching the furnace.

WARNING

Distances from adjacent public walkways, adjacent buildings, operable windows, and building openings shall conform to local codes and/or the National Fuel Gas Code, ANSI Z223.1/NFPA 54, or the National Gas & Propane Code, CSA B149.1.

Vent openings must not be blocked by snow. A minimum curb of 30.5 cm (12 inches) must be used, and the vent outlet should be greater than 30.5 cm (12 inches) off the ground/roof.

Flue gas is dangerously hot and contains contaminants. The user is responsible for determining if the vent gases may degrade the building materials.

The National Gas and Propane Installation Code, B149.1, specifies a 1.8m (6ft) horizontal vent terminal clearance to gas and electric meters and relief devices.

Local codes may supersede or further place restrictions on vent termination locations.

Table 1: Air-Cooled Condenser Unit Clearances 45-240-tons

Location	Clearance for 45–240-ton units
Front (Condenser Side)	152cm (60")
Back (Outside Air)	254 cm (100")
Left	254 cm (100")
Right	254 cm (100")
Top	Unobstructed

Figure 2: RZ Series Unit Orientation

Table 2: Evaporative Condenser Unit Clearances 45-240-tons

Location	Clearance for 45-240-ton units
Front (Condenser Side)	254 cm (100")
Back (Outside Air)	254 cm (100")
Left	254 cm (100")
Right	254 cm (100")
Top	Unobstructed

Condenser coils and fans must be free of any obstructions to start and operate properly with a correct amount of airflow.

For proper unit operation, the immediate area around the condenser must remain free of debris that may be drawn in and obstruct the airflow in the condensing section.

Consideration must be given to obstructions caused by snow accumulation when placing the unit.

5.9.2. Curb Installation

Ensure that the openings in the roof decking are large enough to allow for duct penetration and workspace. Do not make the openings larger than necessary. Set the curb to coincide with the openings. Make sure that the curb is level. The unit must be level in both horizontal axes to support the unit and reduce noise and vibration.

A unit-specific curb drawing is included with the job submittal. See SMACNA *Architectural Sheet Metal Manual and HVAC Duct Construction Standards* for curb installation details.

CAUTION

All roofing work must be completed by competent roofing contractors to avoid any possible leakage.

CAUTION

A clearance of 2.54 cm (1 inch) must be maintained between the outside edges of the duct and combustible material where the supply or the warm air duct passes through a combustible roof in accordance with National Fire Protection Association Standard No. 90A. Provide flashings or enclosures between the structure and the roof. All joints must be sealed with mastic roofing to ensure a watertight seal.

For horizontal return and discharge applications, the total height of the mounting rail and unit base rail must be high enough so that an adequate condensate drain p-trap can be included. The units require a steel mounting rail along all four sides of the unit base for support.

When installed at ground level, a one-piece concrete slab must be used with footings that extend below the frost line. Care must also be taken to protect the coil and fins from damage due to vandalism or other causes.

If the unit is elevated, a field-supplied catwalk is recommended to allow access to the unit service doors.

This unit ships with a curb gasket that is 31 ¾ mm (1¼ inch) wide and 38 mm (1½ inch) tall. The provided gasket, or another similar gasket, must be used between the curb and the unit to reduce vibration from the unit to the building.

5.9.3. Lifting the Unit

CAUTION

Incorrect lifting can cause damage to the unit.

If cables are used to hoist the unit, they must be the same length. See Figure 4 and Figure 5 for dimensions.

Lift the unit with the outside air hood in the downward shipping position. However, the unit may be lifted with the outside air hood in the open position.

Before lifting the unit, be sure that all shipping material has been removed from the unit. Secure the hooks and cables at the marked lifting points provided on the unit.

Hoist the unit to a point directly above the curb and duct openings. Ensure that the gasket material has been applied to the curb.

Carefully lower and align the unit with the utility and duct openings. Lower the unit until the unit skirt fits around the curb. Make sure the unit is properly seated on the curb and is level.

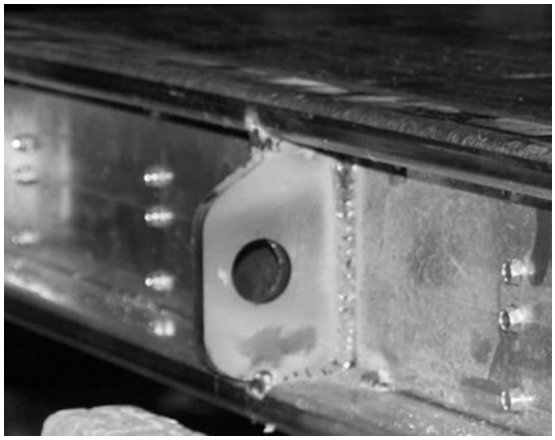

Figure 3: Base Rail Lifting Lug

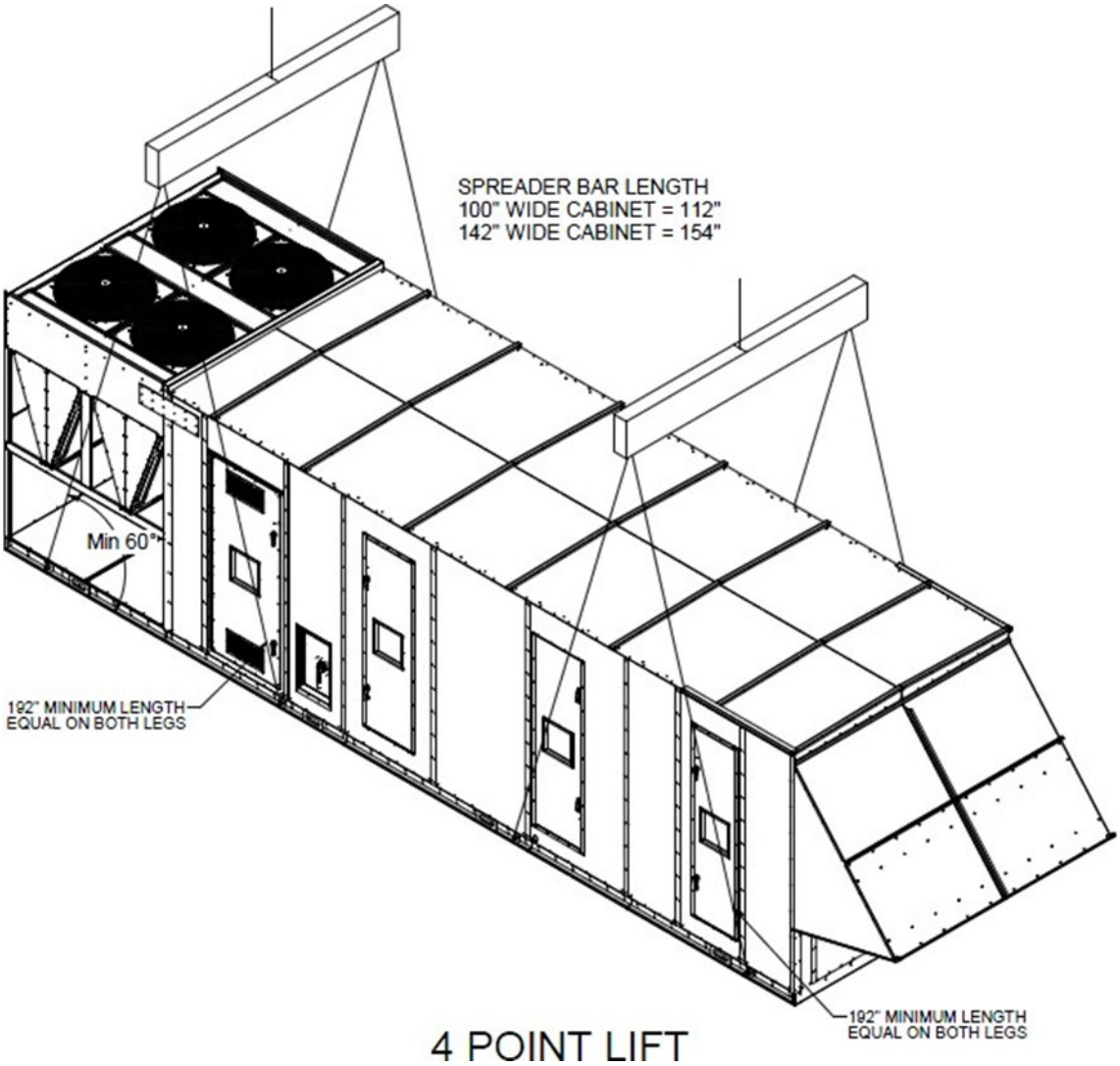

Figure 4: Four-Point Lift RZ Series Air-Cooled Condenser Unit

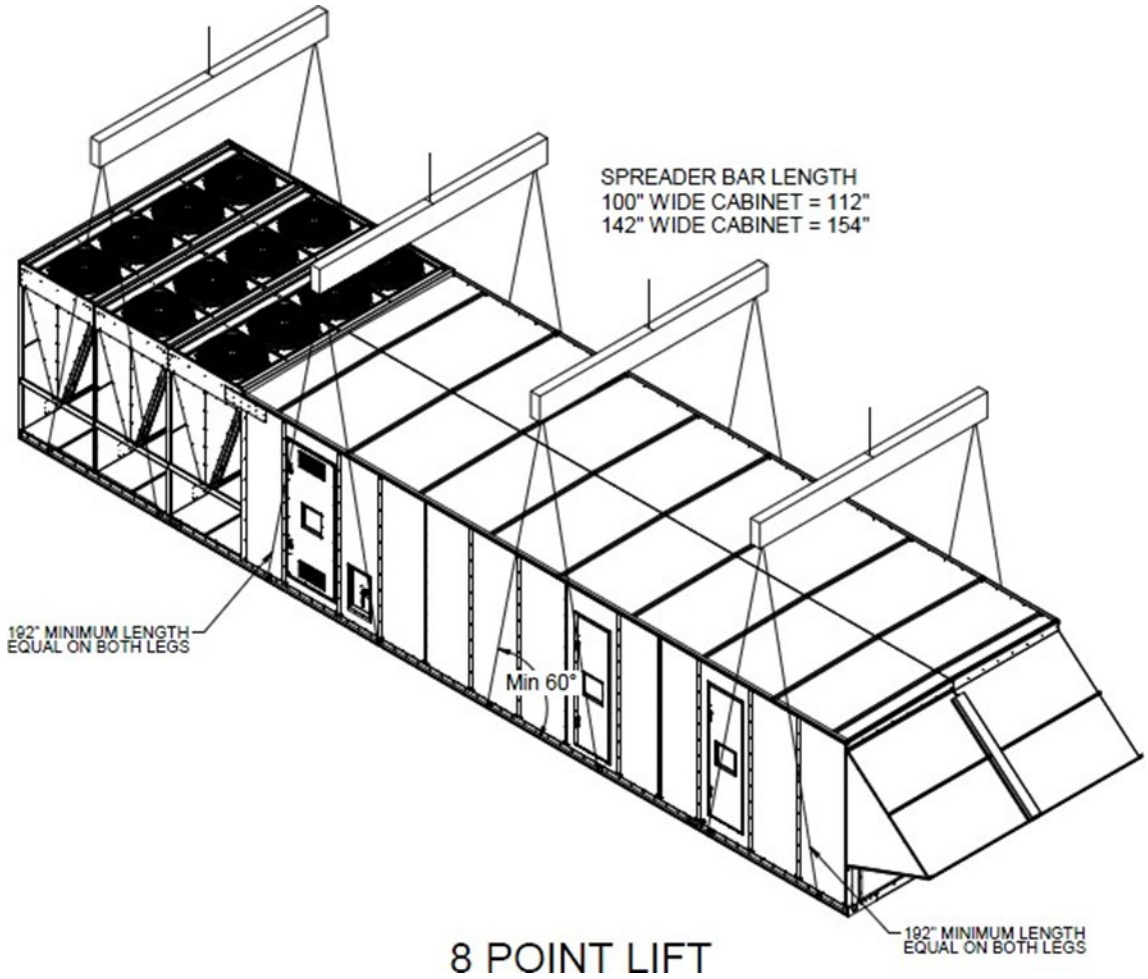

Figure 5: Eight-Point Lift RZ Series Air-Cooled Condenser Unit

Note: The lifting slot locations are unit specific. When lifting, ensure that the unit is rigged at all of the marked lifting points.

5.9.4. Duct Connection

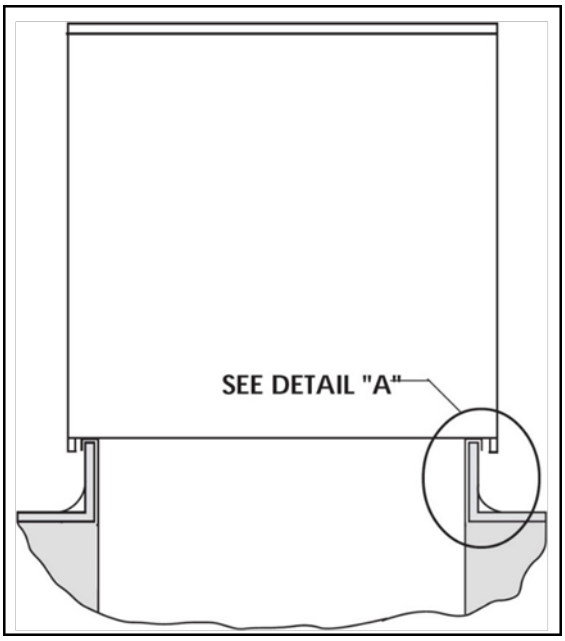

Figure 6: Curb Mounting

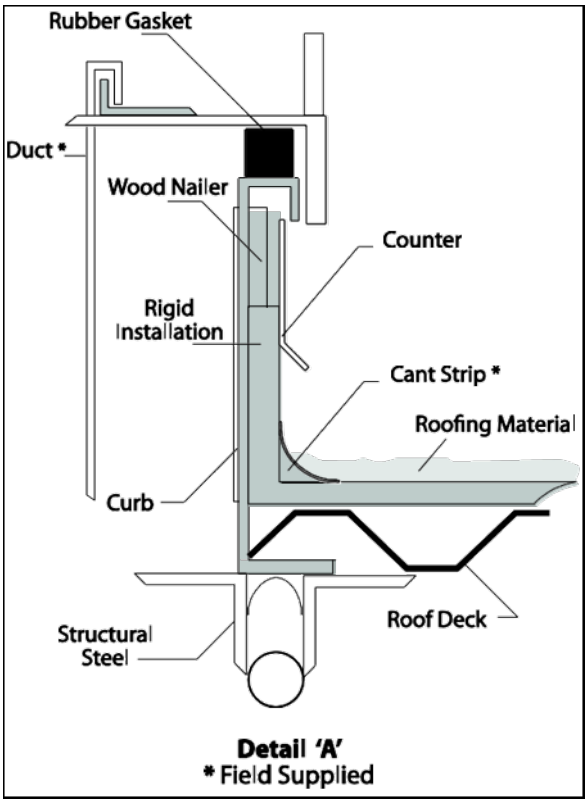

Figure 7: Curb Detail

Table 3: Mounting Dimensions

Tons	A m (ft)	Bm (ft)	C m (ft)	D m (ft)
45-140	2.5 (8.3)	2.4 (8.0)	2.3 (7.7)	2.5 (8.1)
145-240	3.6 (11.8)	3.5 (11.5)	3.4 (11.2)	3.5 (11.6)

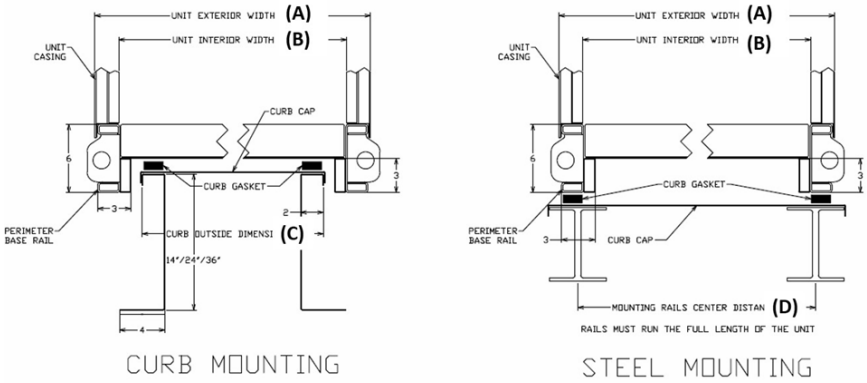

Figure 8: Curb & Steel Mounting Rail with Dimensions

5.9.5. Reassembling Split Units

Some RZ Series units are built and shipped in two separate sections.

The shipping covers must be removed from the ends where the sections connect. Lift and set the largest section first, checking for the correct location and position.

To simplify the connection of the two sections, position and set the second section as close as possible to the first section. This allows the use of a come-along tool to pull the second section against the first section. One come-along tool is required on each side of the unit, connected to the base slots. The two sections must be tightly adjoined before the splicing parts can be installed.

All parts required for splicing the sections together are factory provided. A neoprene gasket is provided for application on the ends of both sections.

Once the unit is completely assembled, visually inspect all exposed areas and fill any gaps with butyl caulking.

Splicing

1. Align the base rail and side sections.
2. Check the roof alignment and connecting flange.
3. Fill the post seam with butyl caulking.
4. Apply the butyl caulking between the roof flange sections.
5. Attach the splice plate to the outside of the post to cover the seam. The splice plate is typically required on both sides of the unit.
6. Install the factory-provided roof splice cap over the two sections connecting flange, and secure it with screws along the length of the cap.
7. Apply the butyl caulking to all seams, the perimeter of the splice, and the perimeter of the roof splice cap against the roof of the unit.

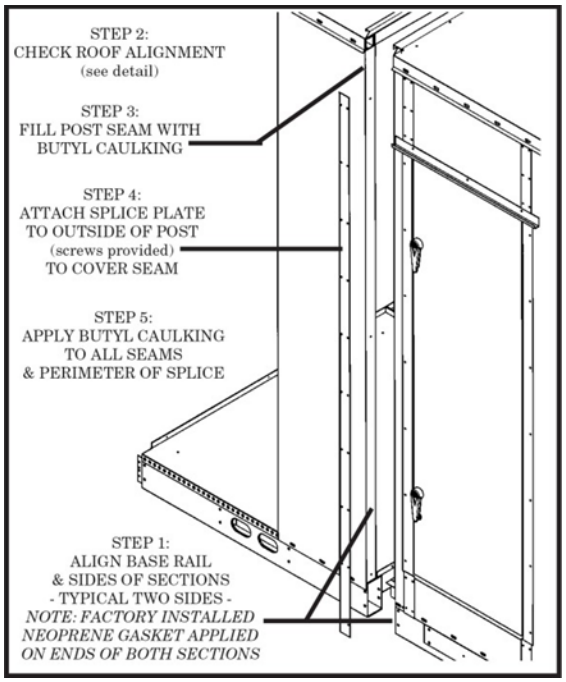

Figure 9: Unit Base and Sides

CAUTION

Attach the splice cap with screws from each side of the cap only. Do not install the screws from the top.

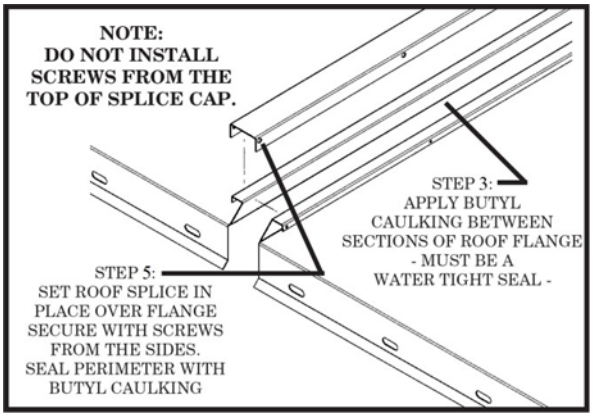

Figure 10: Unit Roof Flange Splice Detail

Refrigeration Split Installation Procedure

If a given unit is too large to be shipped on one truck, the unit must be split. If the condenser side of the split is too long, a split is required in the refrigeration system. Each side of the split will have isolation valves; one isolation valve is connected to the condenser side, while the other is connected to the evaporator side. Keep the isolation valves closed until the following assembly procedure is complete.

CAUTION

The refrigeration lines between the isolation valve and cap at the unit split are charged with 689.5 kPa (100 psi) of nitrogen.

1. Relieve the pressure in the refrigeration split that is charged with nitrogen by attaching a gauge manifold set and purging through the hoses.
2. Remove the copper caps on each side by using a pipe cutter at the brazed joint (Joint A and B).
3. Braze the provided copper lines onto their respective open lines.
4. Charge the newly joined section with 1.28 Mpa (200 psi) of dry nitrogen after the lines are connected. Test the charge for an hour. After one hour and no pressure loss, relieve the pressure by removing the Schrader core. Replace the Schrader core once all pressure is relieved.
5. Evacuate each section of connection piping from valve to valve to 400 microns. The micron gauge must not rise above 500 microns after 30 minutes of wait time.
6. Open the isolation valves. The unit is shipped with the correct refrigerant charge.

Electrical Connection of Split Units

Before attempting to make wire connections between sections, it is important to refer to the unit-specific wiring diagram located in the unit controls compartment to obtain additional details related to the wiring of the specific unit.

The adjoining sections are factory wired and ready for field connection. The electrical wiring is unit specific and designed according to the overall unit configuration.

A factory-supplied and mounted terminal block is located in the main section of the unit that must be used in making the rough-in wire connections.

Each wire being spliced from section to section is tagged at both ends according to its termination. The junctions for wiring the sections together are separated according to voltage.

Ensure that the wires are protected from damage and wear caused by normal operation of the unit and environmental factors.

CAUTION

All wire terminations MUST BE made before applying power to the unit. The unit will not operate unless all circuits are made.

5.9.6. Outside Air Rain Hood

For proper unit operation, the outside air hood must be opened at start-up as shown in Figure 12.

Locate the middle support for the outside air rain hood inside of the unit and remove the shipping screws from each side of the closed hood.

Lift the hood outward to the open position and secure the hood with sheet metal screws. Place the middle support connecting the middle of the hood to the unit and secure it with sheet metal screws. Apply the butyl caulking along the top and both sides of the rain hood. Seal the top corners where the rain hood attaches to the unit. Ensure that any outdoor air intake adjustments are made according to the building ventilation or local code requirements.

Air hoods vary according to the unit size and options. Figure 12 below is shown as a practical guideline for all outside air rain hoods.

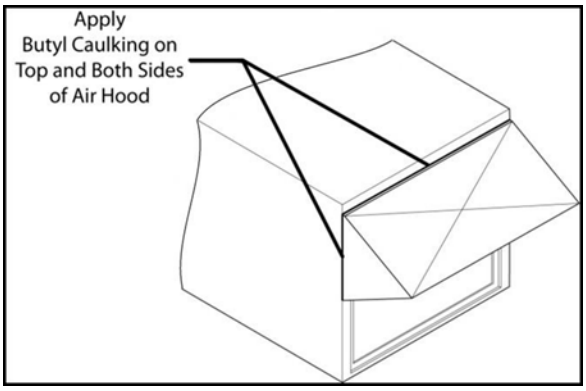

Figure 11: Air Hood Shown in the Open Position

5.9.7. Splash Guard Installation

On RZ Series D and E cabinet units (RZ-145, 160, 180, 200, 220, 240), are designed with removable splash guards at both ends of the base to improve transportation and prevent moisture infiltration after installation.

The splash guards are removed prior to shipping to ensure the unit fits securely on the trailer deck. The Splash Guards are shipped inside of the unit.

Once the unit is positioned on the curb, it is crucial to install the splash guards at both ends to achieve a proper seal at the base.

Proper attachment and sealing of the splash guards are essential. Failure to do so may result in water infiltration under the unit.

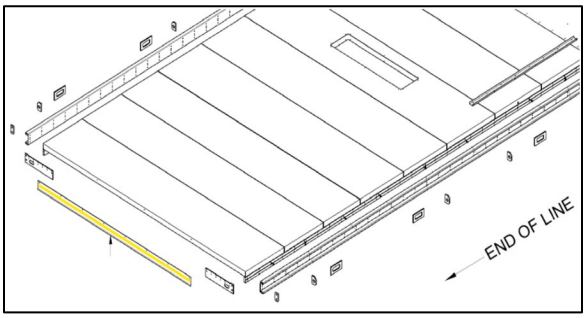

Figure 12: Factory-Supplied Splash Guards

CAUTION

To prevent water from leaking onto the roof curb, the factory-provided sheet metal flashings must be attached to the unit base to cover the shipping slots at both ends of the unit.

5.9.8. Vestibule Exhaust Fan

Prior to the unit operation, on units with service vestibules, the exhaust fan shipping support must be removed from the exterior of the unit. The exhaust fan also includes a factory-provided exterior rain hood, which must be installed.

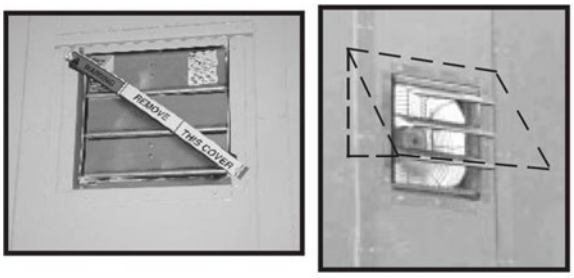

Figure 13: Vestibule Exhaust Fan

5.9.9. Motorized Exhaust & Rain Hood

Narrow (254 cm [100 inch]) - The motorized exhaust damper and rain hood ships inside of the return air section. For proper unit operation, the motorized exhaust damper must be installed in the field. Once the motorized exhaust is screwed into place and has been sealed with butyl caulking, attach a rain hood above the motorized exhaust. Upon screwing the rain hood into place over the motorized exhaust, apply a seal of butyl caulking around the edges of the rain hood.

Wide (360 cm [142 inch]) - The RZ unit arrives with the motorized exhaust already in place. The rain hood ships inside of the return air section and must be field installed. After screwing the rain hood over the motorized exhaust with sheet metal screws, apply a sealant of butyl caulking.

Figure 14: Motorized Exhaust

5.9.10. Electrical

For units not equipped with an incoming power disconnect, all pole disconnects must be provided in the fixed wiring positions in accordance with local or national electrical codes. Verify that the unit nameplate agrees with the power supply. Connect the power and control field wiring as shown on the unit-specific wiring diagram, which is laminated and attached to the door in the controls compartment.

Table 4: Nameplate Voltage Markings & Tolerances

Hz	Nameplate Voltage	Nominal System Voltage	Operating Voltage Range [1]		Acceptable Performance Range[2]	
			Min	Max	Min	Max
60	115	120	104	127	108	126
	208/230	208/240	187	254	187	252
	208	208	187	228	187	228
	230	240	208	254	216	252
	265	277	240	293	249	291
	460	480	416	508	432	504
	575	600	520	635	540	630
50	230	230	198	254	208	254
	400	400	344	440	360	440

Note: 1) The operating voltage is the minimum and maximum voltage for which the unit can function. Never operate outside of this min and max voltage.

2) The acceptable performance range is the minimum and maximum voltage for which the unit's performance is designed and rated to give acceptable performance.

5.9.10.1. Electrical (Continued)

Route the power and control wiring separately, through the utility entry in the base of the unit. Do not run power and signal wires in the same conduit.

WARNING

Electric shock hazard. Before attempting to perform any installation, service, or maintenance, shut off all electrical power to the unit at the disconnect switches. The unit may have multiple power supplies. Failure to disconnect the power could result in dangerous operation, serious injury, death, or property damage.

The size of the supply conductors is based on the unit MCA rating. Supply conductors must be rated at a minimum of 75°C (167°F).

Protect the branch circuit in accordance with the code requirements. The unit must be electrically grounded in accordance with local codes, or in the absence of local codes, the current National Electric Code, ANSI/NFPA 70, or the current Canadian Electrical Code, CSA C22.1.

CAUTION

Proper sealing of the electrical and gas entries into the unit must be performed. Failure to seal the entries may result in damage to the unit and property.

Note: All units are factory wired for 208/230V, 460V, or 575V. If the unit is connected to a 208V supply, the transformer must be rewired to 208V service. For 208V service interchange the yellow and red conductors on the low voltage control transformer.

Red-Black for 208V
Yellow-Black for 230V

The wire power leads to the unit's power block or main disconnect. All wiring beyond this point is completed by the manufacturer and cannot be modified without affecting the unit's agency/safety certification.

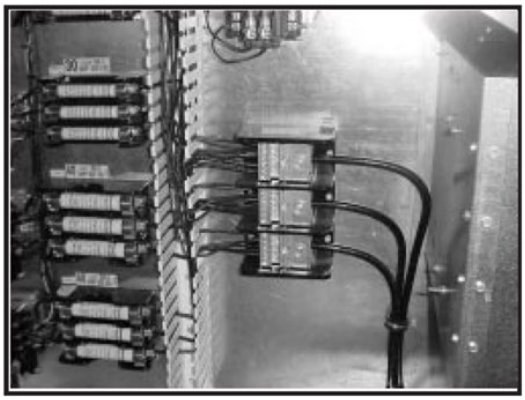

Figure 15: Power Block

The supply voltage must be within the minimum and the maximum range shown on the unit nameplate. The available short circuit current must not exceed the short circuit rating (SCCR) shown on the unit nameplate.

Three-phase voltage imbalances cause motor overheating and premature failure. The maximum allowable imbalance is 2%.

A voltage imbalance is defined as 100 times the maximum deviation from the average voltage divided by the average voltage.

Example:

(221V+230V+227V)/3 = 226V, then 100*(226V-221V)/226V = 2.2%, which exceeds the allowable imbalance.

Check the voltage imbalance at the unit disconnect switch and at the compressor terminal. Contact your local power company for line voltage corrections. A qualified technician must check for proper motor rotation. Additionally, technicians should check that the blower motor amperage does not exceed the listed range on the unit's nameplate.

The VFD provides the unit with motor overload protection and must not be bypassed. Wire the control signals to the unit's low-voltage terminal block, which is located in the controls compartment.

CAUTION

The rotation must be checked on all motors and compressors of three-phase units. The supply fan, exhaust fan, return fan, and condenser fan motors must be checked by a qualified service technician at startup, and any wiring alterations must only be made at the unit's power connection.

Variable frequency drives are programmed to automatically rotate the fan in the correct rotation direction. Do not rely on fans with variable frequency drives for compressor rotation.

CAUTION

Scroll compressors are directional and can be damaged by operation in the wrong direction. The low-pressure switches on the compressors are disconnected after factory testing. The compressor rotation must be checked by a qualified service technician at startup using the suction and discharge pressure gauges, and any wiring alterations must only be made at the unit's power connection.

Variable Speed Compressors

Variable speed compressors with VFD speed control are standard on RZ Series units. Variable speed compressors must not be operated below 50 Hz.

Fuses and Circuit Breakers

The interrupting rating of the fuses and circuit breakers of the unit is determined by the KAIC rating of the unit. Refer to the wiring diagram for fuse sizing.

Table 5: 35 KAIC Fuse Sizing

35 KAIC Construction		
Component	**Description**	**Interrupting Rating (kA)**
Fuse	Class CC,600V, 0.5A - 30A	200
Fuse	Class J, 600V, 35A - 600A	200
Disconnect	3P, 600V, 15A - 600A	35

Table 6: 35 KAIC Fuse Sizing

65 KAIC Construction		
Component	**Description**	**Interrupting Rating (kA)**
Fuse	Class CC, 600V, 0.5A - 30A	200
Fuse	Class J, 600V, 35A - 600A	200
Disconnect	3P, 600V, 15A - 600A	65

CAUTION

The unit must not be operated without a p-trap. Failure to install the p-trap may result in an overflow of condensate water into the unit.

CAUTION

No variable speed compressor should operate below 50 Hz. Operating the variable speed compressors outside of the frequency range specified in this manual voids all warranties, and may result in compressor failure.

CAUTION

Ensure that the wires are protected from damage and wear caused by the normal operation of the unit and environmental factors

5.9.11. Condensate Drain Piping

The unit is equipped with two or more condensate drain-pan connections. A drain line with a p-trap must be installed on every drain connection, and the p-trap must not exceed 15.2 cm (6 inch) from the drain connection. The lines must be the same pipe size or larger than the drain connection and pitched away from the unit at least 1/8 inch per foot. An air brake must be used with long runs of condensate lines.

All drain connections must be used and individually trapped to maintain a minimum amount of condensate accumulation in the drain pans. ABS-type cement must be used to join the drainpipe connections.

Note: The drain pan connections are 38 mm (1.5 inch) MPT fittings.

Condensate drain trapping and piping must conform to all applicable governing codes. The drainage of the condensate directly onto the roof may be acceptable in certain areas; refer to local codes to see if it is permitted. If the condensate is to drain directly onto the roof, a drip pad must be placed below the drain to protect the roof from possible damage.

The draw-through cooling coils have a negative static pressure in the drain pan area. This causes an un-trapped drain to back up due to the air being pulled up through the condensate drain piping.

CAUTION

All of the condensate drain connections must be used. Drain pans are sloped towards the connections.

CAUTION

All of the condensate drains must be trapped individually before they are connected to a common line.

5.9.12. Draw-Through Coils

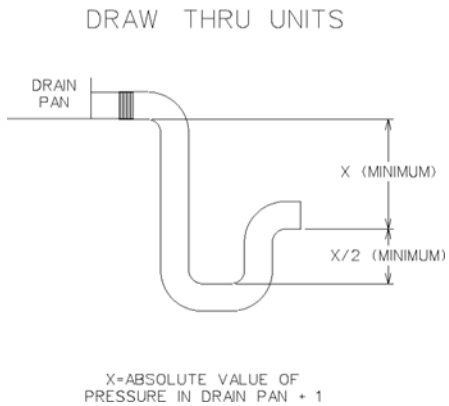

Figure 16: Draw-Through Drain Tap

The X dimension on the draw-through trap must be equal to the absolute value of the negative static pressure in the drain pan plus one inch. To calculate the static pressure at the drain pan, add the pressure drops of all components upstream of the drain pan, including the cooling coil, as well as the return duct static pressure. Include the dirt allowance pressure drop for the filters to account for the worst-case scenario.

The height from the top of the bottom bend of the trap to the bottom of the leaving pipe must be at least equal to one half of the X dimension. This ensures that enough water is stored in the trap to prevent losing the drain seal during unit startup.

The blow-through coils have a positive static pressure in the drain pan. The condensate piping on these drain pans must be trapped to prevent pressure loss through the drain.

Note: The absolute value of the fan inlet pressure is greater than or equal to the absolute value of the static pressure in the drain pan on the draw-through unit. As such, the fan inlet pressure is a safe value to use for the drain pan static pressure.

Table 7: Draw-Through Drain Trap Dimensions (Metric)

Draw-Through		
Drain Pan Pressure	Trap Dimensions	
Negative Static (mmHg)	X (millimeters)	X/2 (millimeters)
-0.93	38.1	19.1
-1.87	50.8	25.4
-2.80	63.5	31.8
-3.74	76.2	38.1
-4.67	88.9	44.5
-5.60	101.6	50.8
-6.54	114.3	57.2
-7.47	127	63.5
-8.41	139.7	69.9
-9.34	152.4	76.2
-10.28	165.1	82.6
-11.21	177.8	88.9
-12.14	190.5	95.3
-13.08	203.2	101.6
-14.01	215.9	108.0
-14.95	228.6	114.3

Table 8: Draw-Through Drain Trap Dimensions (Imperial)

Draw-Through		
Drain Pan Pressure	Trap Dimensions	
Negative Static (inches of water)	X (inch)	X/2 (inch)
-0.50	1.50	0.75
-1.00	2.00	1.00
-1.50	2.50	1.25
-2.00	3.00	1.50
-2.50	3.50	1.75
-3.00	4.00	2.00
-3.50	4.50	2.25
-4.00	5.00	2.50
-4.50	5.50	2.75
-5.00	6.00	3.00
-5.50	6.50	3.25
-6.00	7.00	3.50
-6.50	7.50	3.75
-7.00	8.00	4.00
-7.50	8.50	4.25
-8.00	9.00	4.50

5.9.13. Blow-Through Coils

The Y dimension of the blow-through traps must be equal to the value of the positive pressure in the drain pan plus one inch. This ensures that there will be enough water stored in the trap to counter the static pressure in the drain pan. To find the pressure, subtract any pressure drops between the drain pan and the supply fan from the fan discharge pressure. The worst-case scenario for blow-through coils is the minimum pressure drop, so do not include the dirt allowance pressure drops for the filters.

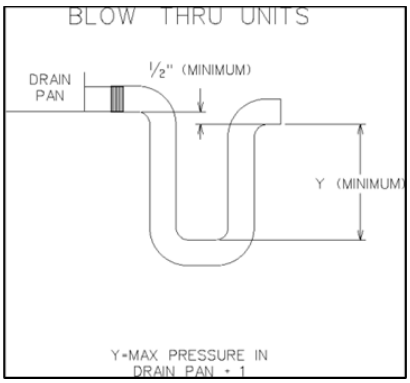

Figure 17: Blow-through Drain Trap

The bottom of the leaving pipe must be at least one-half inch lower than the bottom of the drain pan connection. This ensures proper drainage even when the unit is not running.

Note: Users may need to fill the trap manually or operate the unit until it collects enough condensate to fill the trap automatically. The trap is filled when the unit is turned off.

Table 9: Blow-Through Drain Trap Dimensions (Metric)

Blow-Through	
Drain Pan Pressure	Trap Dimension
Positive Static (mmHg)	Y (mmHg)
0.93	38.1
1.87	50.8
2.80	63.5
3.74	76.2
4.67	88.9
5.60	101.6
6.54	114.3
7.47	127.0
8.41	139.7
9.34	152.4
10.28	165.1
11.21	177.8
12.14	190.5
13.08	203.2
14.01	215.9
14.95	228.6

Table 10: Blow-Through Trap Dimensions (Imperial)

Blow-Through	
Drain Pan Pressure	Trap Dimension
Positive Static (inches of water)	Y (inch)
0.5	1.5
1.0	2.0
1.5	2.5
2.0	3.0
2.5	3.5
3.0	4.0
3.5	4.5
4.0	5.0
4.5	5.5
5.0	6.0
5.5	6.5
6.0	7.0
6.5	7.5
7.0	8.0
7.5	8.5
8.0	9.0

5.10. Startup

(See back of manual for startup form)

WARNING

Electric shock hazard. Shut off all electrical power to the unit to avoid shock hazards or injuries from rotating parts.

During the startup, it is necessary to perform routine checks on the performance of the unit. This includes checking the air flow, air filters, condenser water flow, dampers, heaters, and refrigerant charge.

5.10.1. Filters

Do not operate the unit without filters in place. Check the unit for proper filter placement during startup. Operating the equipment without filters results in clogged cooling and heating coils.

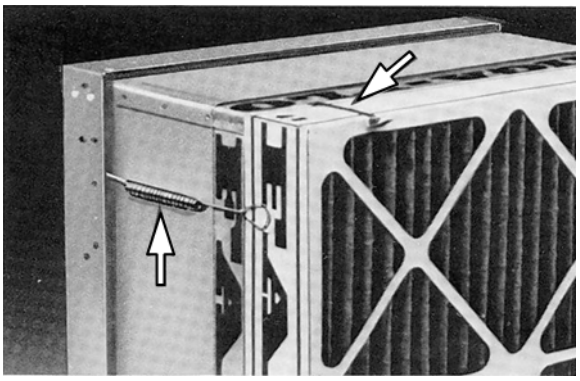

Figure 18: Top Clip and Side Spring Fastener Securing Filters in Place

CAUTION

Before completing startup and leaving the unit, a complete operating cycle must be observed to verify that all components are functioning properly.

5.10.1.1. Cartridge Filter Installation

Cartridge filters may be held in their proper orientation and placement with channels, spring fasteners, or clips (see Figure 19).

5.10.1.2. HEPA Filters

HEPA filters can be selected in the Pre, Standard, and Final filter positions. HEPA filters are highly effective filters and require field certification.

HEPA filters can be installed the same way as the cartridge filters. Place the filter on the holding frame, and hold the filter in place by the swing bolt assembly on the sides. If the unit includes HEPA pre-filters, an adapter frame is also included. The adapter frame holds the HEPA filters, and the swing bolts attach to the adapter frame.

5.10.1.3. Metal Mesh Filters

Metal mesh filters are washable expanded aluminum mesh filters that are mounted over the outside air intake. These filters are normally located on the outside air hood and are commonly used to prevent moisture carryover from the outside. An access panel is provided to slide the filters out for cleaning.

5.10.2. Airflow Balancing and Checking

High-performance systems commonly have complex air distribution and fan systems. Unqualified personnel should not attempt to adjust the fan operation or air circulation, as all systems have unique operational characteristics. Professional air balance specialists must be employed to establish actual operating conditions and to configure the air delivery system for optimal performance.

5.10.3. Air Flow Monitoring

Some units include an air flow monitoring device. Air flow can be measured either at the outside air opening, the supply fans, or the return fans. Outside air uses a measuring grid, while the fans use a piezo ring on their inlets to collect this information. A singular processor located in the vestibule handles all of these different readings.

5.10.4. Supply, Return, and Exhaust Backward Curved Fans

RZ Series units are equipped with direct drive backward curved fan assemblies that deliver the air volume specified according to the unit size and job requirements. This is either done with air volume bands in the blower wheels or with VFDs. Field airflow adjustments may be required at startup.

Air volume bands for the wheels are sized according to the unit's air delivery specifications, and can also be ordered from the factory for field installation. Wheels come standard with a 10% air volume band, as a safety factor, in case additional air volume is required from the unit.

5.10.4.1. Airflow Adjustment

If reduced air volume is required, an air volume band or a larger air volume band can be installed within the blower wheel to reduce the amount of air delivered by the wheel.

If the unit is factory equipped with an air volume band and additional air volume is required, the band can be removed from the wheel.

Use the fan program in AAON ECat to determine the new band size for the required CFM and static pressure.

The following photos of a wheel are provided to identify the air band location in the wheel. Actual field installation of the air band into the wheel requires access into and through the blower wheel venture, which may require the removal of the fan motor and wheel.

Air volume bands are made of aluminum and are sized and equipped with easy-bend tabs that are inserted into the pre-punched slots provided on the wheel. Once the band has been inserted into the slots, it must be secured by bending the tabs over from the back side of the wheel. Use the pop-rivet to connect the ends of the bands via the holes provided on the ends of each band to secure the wheel from the inside.

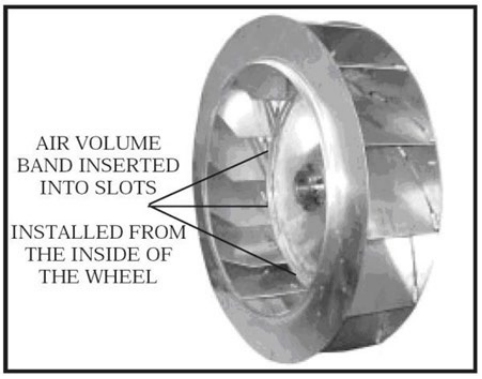

Figure 19: Air Volume Band

If the band is field installed, a hand-held pop-rivet tool is recommended to connect the band ends together. Caution must be taken to ensure that the band is tightly installed and no damage, such as denting or alterations to the wheel or blades, has occurred during the installation.

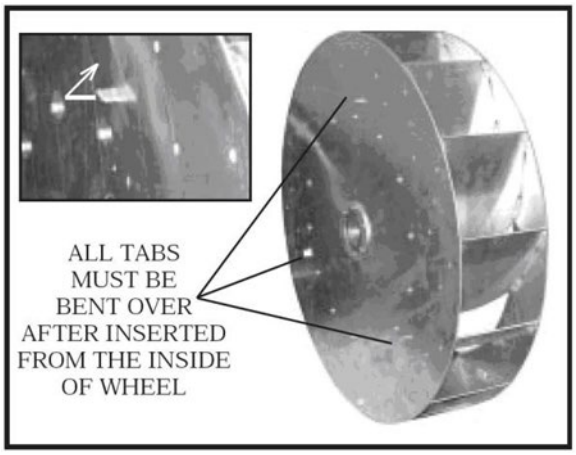

Figure 20: Air Volume Band Tab Locations

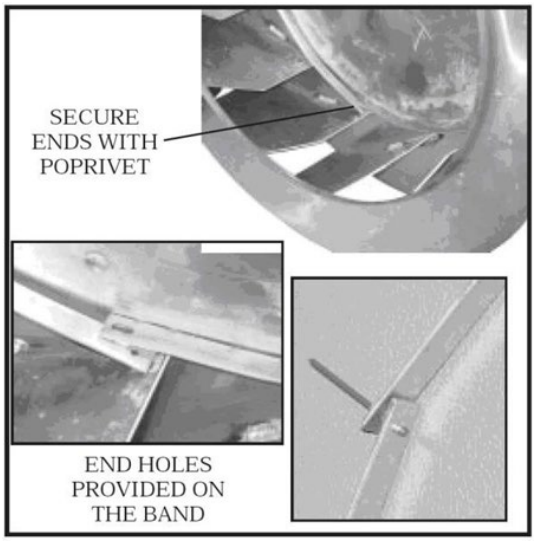

Figure 21: Securing Air Volume Band Ends

For single set screw applications, tighten the set screw to the required torque setting (Table 11) using a calibrated torque wrench. For double set screw applications, tighten one set screw to half of the required torque setting (Table 11) using a calibrated torque wrench. Tighten the second set screw to the full required torque setting before continuing to tighten the first screw until it reaches the required torque setting.

Table 11: Plenum Fan Set Screw Specifications

Set Screw Diameter	Torque (Nm [In-Lbs])
6.4 mm (1/4")	9 [80]
7.9 mm (5/16")	14.2 [126]
9.5 mm (3/8")	27.12 [240]
11.1 mm (7/16")	43.4 [384]
12.7 mm (1/2")	84.1 [744]
14.3 mm (9/16")	122 [1,080]
15.9 mm (5/8")	169.5 [1,500]
19.1 mm (3/4")	291.5 [2,580]
22.2 mm (7/8")	406.8 [3,600]
25.4 mm (1")	610.2 [5,400]

Figure 23 below shows the gap tolerances that are allowed between the blower and the inlet cone for the RZ plenum fan blowers. The inlet cone can be moved as necessary to center the cone in relation to the blower. The blower can be moved on the motor shaft to set the correct overlap. These tolerances are critical to the performance of the blower.

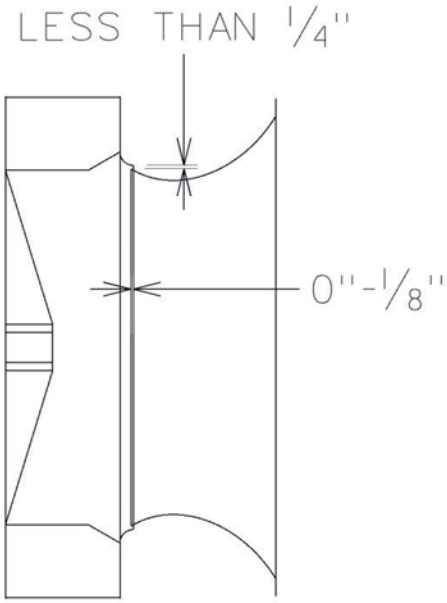

Figure 22: Plenum Fan Gap Tolerances

Note: 1/4" = 6.35 mm, 1/8" = 3.18 mm

5.10.5. Refrigerant Charge

Packaged compressorized rooftop units are factory charged and optimized for full load conditions at 95°F/35°C ambient.

For high average ambient operation (above 95°F/35°C), a charge adjustment may be critical to maintain desirable performance in the operating environment. Some IECC climate regions tend to have higher ambient operating temperatures. Regions 1, 2, 3, 4B, and parts of 5B are more likely to have a high average ambient operation temperatures.

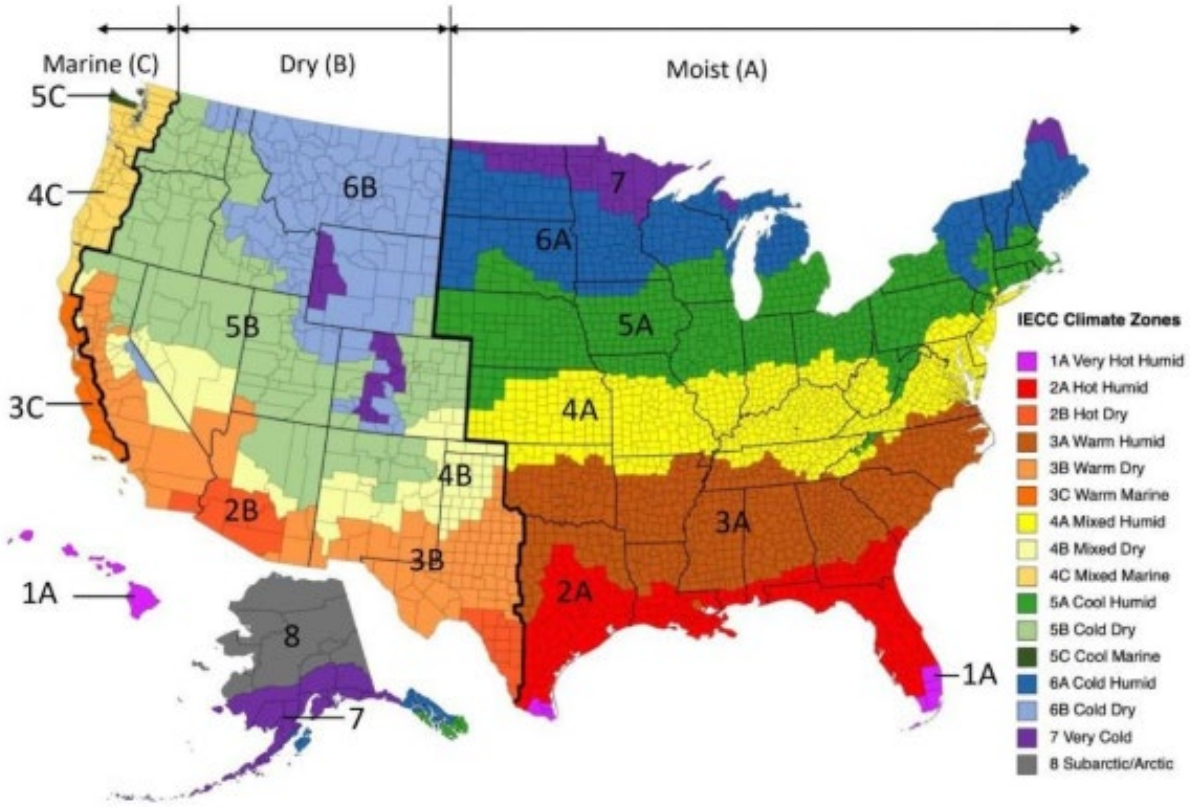

Figure 23: 2021 IECC Regions Across the United States

5.10.5.1. Adjusting Refrigerant Charge

Adjusting the charge of a system in the field is based on the determination of liquid sub-cooling and evaporator superheat. On a system with a TXV, liquid subcooling is more representative of the charge than evaporator superheat, but both measurements must be taken.

WARNING

Do not use a torch or other potential ignition source to detect refrigerant leaks. Only use an electronic detector suitable for the refrigerant, or the bubble method with chlorine-free detergent.

CAUTION

The Clean Air Act of 1990 bans the intentional venting of refrigerant (CFCs and HCFCs) as of July 1, 1992. Approved methods of recovery, recycling, or reclaiming must be followed. Fines and/or incarceration may be levied for non-compliance.

WARNING

Ensure that there are no live electrical components or wiring exposed when adjusting the charge, recovering the charge, or purging the system. Ensure that the earthing continuity is unbroken.

Note: Adjusting the charge with a dirty coil or dirty filters will result in degraded performance. Adjusting the charge will also change the Q minimum and room area required; see Table 15 for more information.

5.10.5.2. Before Charging

The unit being charged must be at or near full load conditions before adjusting the charge.

Units equipped with a hot gas reheat must be charged with the hot gas reheat valves closed while the unit is in cooling mode to get the proper charge. After charging, operate the unit in reheat (dehumidification) mode to check for correct operation.

Units equipped with heat pump options must be charged in the heating mode to get the proper charge. After charging, the unit must be operated in the cooling mode to check for the correct charge. The charge may need to be adjusted for the cooling mode. If adjustments are made in cooling mode, the heating mode must be rerun to verify proper operation.

After adding or removing the charge, the system must be allowed to stabilize, typically 10-15 minutes, before making any other adjustments.

The type of unit and options determine the ranges for liquid sub-cooling and evaporator superheat. Refer to Table 12 and Table 13 when determining the proper sub-cooling.

5.10.5.3. Checking Liquid Sub-Cooling

Measure the temperature of the liquid line as it leaves the condenser coil. Read the gauge pressure at the liquid line close to the point where the temperature was taken. Users must use the liquid line pressure as it varies from the discharge pressure due to a drop in the condenser coil pressure.

Convert the pressure obtained to a saturated temperature using the appropriate refrigerant temperature-pressure chart.

Subtract the measured liquid line temperature from the saturated temperature to determine the liquid subcooling.

Compare the calculated subcooling to the values in Tables 12 and 13 for a list of appropriate unit types and options.

5.10.5.4. Checking Evaporator Superheat

Measure the temperature of the suction line close to the compressor. Read the gauge pressure at the suction line close to the compressor.

Convert the pressure obtained to a saturated temperature using the appropriate refrigerant temperature-pressure chart.

Subtract the saturated temperature from the measured suction line temperature to determine the evaporator superheat.

For refrigeration systems with tandem compressors, it is critical that the suction superheat setpoint on the TXV is set between 5.6-7.2°C (10-13°F) with one compressor running. The suction superheat will increase both compressors running in tandem. Inadequate suction superheat temperatures allow liquid refrigerant to return to the compressors, which washes the oil out of the compressors. A lack of oil lubrication destroys a compressor.

Note: Liquid subcooling must be measured with both compressors running in tandem.

Compare the calculated superheat to Tables 12 and 13 for the appropriate unit types and options.

CAUTION

The expansion valve must be adjusted to approximately 4.4-8.3°C (8-15°F) of suction superheat. Failure to have sufficient superheat damages the compressor and voids the warranty.

Table 12: Acceptable Fin & Tube Sub-Cooling and Superheat Temperatures

Air-Cooled Condenser (Metric)	
Sub-Cooling[2]	4.4-8.3°C / 1.1-2.2°C (HP)*
Sub-Cooling with Hot Gas Reheat[2]	4.4-8.3°C /1.1-3.3°C (HP)*
Superheat[1]	4.4-8.3°C
Evaporative Condenser	
Sub-Cooling[2]	3.3-5.5°C
Sub-Cooling with Hot Gas Reheat[2]	4.4-6.7°C
Superheat[1]	5.6-8.3°C
Water-Cooled Condenser/ Water Source Heat Pump in Cooling Mode	
Sub-Cooling[2]	2.2-4.4°C
Sub-Cooling with Hot Gas Reheat[2]	4.4-6.7°C
Superheat[1]	4.4-8.3°C

Air-Cooled Condenser (Imperial)	
Sub-Cooling[2]	8-15°F / 2-4°F (HP)*
Sub-Cooling with Hot Gas Reheat[2]	8-15°F /2-6°F (HP)*
Superheat[1]	8-15°F
Evaporative Condenser	
Sub-Cooling[2]	6-10°F
Sub-Cooling with Hot Gas Reheat[2]	8-12°F
Superheat[1]	10-15°F
Water-Cooled Condenser/ Water Source Heat Pump in Cooling Mode	
Sub-Cooling[2]	4-8°F
Sub-Cooling with Hot Gas Reheat[2]	8-12°F
Superheat[1]	8-15°F

Notes: [1] One compressor running in tandem
[2] Two compressors running in tandem

Table 13: Acceptable Microchannel Air-Cooled Condenser Coil Liquid Sub-Cooling Values (Metric)

Cooling Mode Liquid Sub-Cooling Values(°C)					
Ambient (°C)	Evaporator Coil Saturation Temperature (°C)				
	4.4	7.2	8.9	10.0	12.8
19.4	5.0 - 7.8	4.4 - 7.2	4.4 - 7.2	3.9 - 6.7	2.8 - 5.6
22.2	5.6 - 8.3	5.0 - 7.8	5.0 - 7.8	4.4 - 7.2	3.9 - 6.7
27.8	5.6 - 8.3	5.6 - 8.3	5.6 - 8.3	5.0 - 7.8	3.9 - 6.7
35.0	5.6 - 8.3	5.6 - 8.3	5.6 - 8.3	5.0 - 7.8	4.4 - 7.2
40.6	6.1 - 8.9	6.1 - 8.9	5.6 - 8.3	5.6 - 8.3	4.4 - 7.2
46.1	5.6 - 8.3	6.1 - 8.9	6.1 - 8.9	6.1 - 8.9	5.0 - 7.8

Table 14: Acceptable Microchannel Air-Cooled Condenser Coil Liquid Sub-Cooling Values (Imperial)

Cooling Mode Liquid Sub-Cooling Values(°F)					
Ambient (°F)	Evaporator Coil Saturation Temperature (°F)				
	40	45	48	50	55
67	9 - 14	8 - 13	8 - 13	7 - 12	5 - 10
72	10 - 15	9 - 14	9 - 14	8 - 13	7 - 12
82	10 - 15	10 - 15	10 - 15	9 - 14	7 - 12
95	10 - 15	10 - 15	10 - 15	9 - 14	8 - 13
105	11 - 16	11 - 16	10 - 15	10 - 15	8 - 13
115	10 - 15	11 - 16	11 - 16	11 - 16	9 - 14

Notes: 1) Microchannel condenser coils are more sensitive to charge. The system must be running in cooling mode with the compressor, supply airflow & condenser fan speed at full load. The sub-cooling value changes depending on the ambient temperature reading and the evaporator coil saturation temperature. To find the correct sub-cooling value, find the ambient temperature in the first column and follow that across to the SST (4.4-12.8°C [40-55°F]).

2) Superheat for Microchannel condenser coils must be between 4.4 and 8.3°C (8 - 15°F).

5.10.5.5. Adjusting Sub-cooling and Superheat Temperatures

The system is overcharged if the sub-cooling temperature is too high and the evaporator is fully loaded. Increased sub-cooling can also occur under low evaporator load conditions, or when the evaporator superheat falls within the temperature range shown in Tables 12 and 13, as high superheat levels contribute to increased sub-cooling.

Correct an overcharged system by reducing the amount of refrigerant in the system to lower the unit's subcooling.

CAUTION

Refrigerant overcharging results in elevated compressor discharge pressure. The maximum allowable charge of any single circuit is 133 kg (4700 oz).

The system is undercharged if the superheat is too high and the sub-cooling is too low.

Correct an undercharged system by adding refrigerant to the system to reduce superheat and raise subcooling.

If the subcooling is correct and the superheat is too high, the expansion valve may need to be adjusted to correct the superheat.

5.10.6. Freeze Stat Startup

Freeze Stat is an adjustable temperature sensor (-23.3°C to 21.1°C [-10 to 70°F]) mounted on the tubing of the first cooling circuit and wired to de-energize all cooling circuits if the tubing temperature falls below the setpoint. This option is used to prevent the freezing of the evaporator coil.

Recommended Setting: 0°C to 1.7°C (32° F to 35° F).

Table 15: Minimum Airflow and Room Areas

Charge in kg (oz)	Min Airflow in m^3/h (CFM)	Minimum Room Area in m^2 (ft^2)			
		1.8 m (6 ft) release height	2.2 m (7.2 ft) release height	3 m (10 ft) release height	3.7 m (12 ft) release height
28.3 (1000)	**7646** (4500)*	**106** (1145)	**87** (937)	**64** (687)	**52** (557)
29.8 (1050)	**7646** (4500)*	**112** (1203)	**91** (904)	**67** (722)	**54** (585)
31.2 (1100)	**7646** (4500)*	**117** (1260)	**96** (1031)	**70** (756)	**57** (613)
32.6 (1150)	**7646** (4500)*	**122** (1317)	**100** (1078)	**73** (790)	**60** (641)
34.0 (1200)	**7646** (4500)*	**128** (1375)	**104** (1125)	**77** (825)	**62** (669)
35.4 (1250)	**7646** (4500)*	**133** (1432)	**109** (1171)	**80** (859)	**65** (697)
36.9 (1300)	**7646** (4500)*	**138** (1489)	**113** (1218)	**83** (893)	**67** (724)
38.3 (1350)	**7646** (4500)*	**144** (1546)	**118** (1265)	**86** (928)	**70** (752)
39.7 (1400)	**7646** (4500)*	**149** (1604)	**122** (1312)	**89** (962)	**72** (780)
41.1 (1450)	**7646** (4500)*	**154** (1661)	**126** (1359)	**93** (997)	**75** (808)
42.5 (1500)	**7646** (4500)*	**160** (1718)	**131** (1406)	**96** (1031)	**78** (836)
43.9 (1550)	**7646** (4500)*	**165** (1775)	**135** (1453)	**99** (1065)	**80** (864)
45.4 (1600)	**7646** (4500)*	**170** (1833)	**139** (1500)	**102** (1100)	**83** (892)
46.8 (1650)	**7646** (4500)*	**176** (1890)	**144** (1546)	**105** (1134)	**85** (919)
48.2 (1700)	**7646** (4500)*	**181** (1947)	**148** (1593)	**109** (1168)	**88** (947)
49.6 (1750)	**7646** (4500)*	**186** (2005)	**152** (1640)	**112** (1203)	**91** (975)
51.0 (1800)	**7646** (4500)*	**192** (2062)	**157** (1687)	**115** (1237)	**93** (1003)
52.4 (1850)	**7646** (4500)*	**197** (2119)	**161** (1734)	**118** (1271)	**96** (1031)
53.9 (1900)	**7646** (4500)*	**202** (2176)	**165** (1781)	**121** (1306)	**98** (1059)
55.3 (1950)	**7646** (4500)*	**208** (2234)	**170** (1828)	**125** (1340)	**101** (1087)
56.7 (2000)	**7646** (4500)*	**213** (2291)	**174** (1874)	**128** (1375)	**104** (1115)
58.1 (2050)	**7646** (4500)*	**218** (2348)	**178** (1921)	**131** (1409)	**106** (1142)
59.5 (2100)	**7646** (4500)*	**223** (2405)	**183** (1968)	**134** (1443)	**109** (1170)
61.0 (2150)	**7646** (4500)*	**229** (2463)	**187** (2015)	**137** (1478)	**111** (1198)
62.4 (2200)	**7646** (4500)*	**234** (2520)	**192** (2062)	**140** (1512)	**114** (1226)
63.8 (2250)	**7646** (4500)*	**239** (2577)	**196** (2109)	**144** (1546)	**116** (1254)
65.2 (2300)	**7646** (4500)*	**245** (2635)	**200** (2156)	**147** (1581)	**119** (1282)
66.6 (2350)	**7646** (4500)*	**250** (2692)	**205** (2202)	**150** (1615)	**122** (1310)
68.0 (2400)	**7646** (4500)*	**255** (2749)	**209** (2249)	**153** (1649)	**124** (1337)
69.5 (2450)	**7646** (4500)*	**261** (2806)	**213** (2296)	**156** (1684)	**127** (1365)
70.9 (2500)	**7646** (4500)*	**266** (2864)	**218** (2343)	**160** (1718)	**129** (1393)
72.3 (2550)	**7646** (4500)*	**271** (2921)	**222** (2390)	**163** (1753)	**132** (1421)
73.7 (2600)	**7646** (4500)*	**277** (2978)	**226** (2437)	**166** (1787)	**135** (1449)
75.1 (2650)	**7646** (4500)*	**282** (3035)	**231** (2484)	**169** (1821)	**137** (1477)
76.5 (2700)	**7758** (4566)**	**287** (3093)	**235** (2530)	**172** (1856)	**140** (1505)

Table 16: Minimum Airflow and Room Areas (continued)

Charge of Largest Circuit in kg (oz)	Min Airflow in m^3/h (CFM)	Minimum Room Area in m^2 (ft^2)			
		1.8 m (6 ft) release height	2.2 m (7.2 ft) release height	3 m (10 ft) release height	3.7 m (12 ft) release height
78.0 (2750)	**7901** (4651)**	**293** (3150)	**239** (2577)	**176** (1890)	**142** (1532)
79.4 (2800)	**8045** (4735)**	**298** (3207)	**244** (2624)	**179** (1924)	**145** (1560)
80.8 (2850)	**8189** (4820)**	**303** (3265)	**248** (2671)	**182** (1959)	**148** (1588)
82.2 (2900)	**8332** (4904)**	**309** (3322)	**252** (2718)	**185** (1993)	**150** (1616)
83.6 (2950)	**8476** (4989)**	**314** (3379)	**257** (2765)	**188** (2027)	**153** (1644)
85.0 (3000)	**8620** (5073)**	**319** (3436)	**261** (2812)	**192** (2062)	**155** (1672)
86.5 (3050)	**8763** (5158)**	**325** (3494)	**266** (2858)	**195** (2096)	**158** (1700)
87.9 (3100)	**8907** (5243)**	**330** (3551)	**270** (2905)	**198** (2131)	**160** (1727)
89.3 (3150)	**9051** (5327)**	**335** (3608)	**274** (2952)	**201** (2165)	**163** (1755)
90.7 (3200)	**9194** (5412)**	**341** (3665)	**279** (2999)	**204** (2199)	**166** (1783)
92.1 (3250)	**9338** (5496)**	**346** (3723)	**283** (3046)	**208** (2234)	**168** (1811)
93.6 (3300)	**9482** (5581)**	**351** (3780)	**287** (3093)	**211** (2268)	**171** (1839)
95.0 (3350)	**9625** (5665)	**356** (3873)	**292** (3140)	**214** (2302)	**173** (1867)
96.4 (3400)	**9769** (5750)	**362** (3895)	**296** (3186)	**217** (2337)	**176** (1895)
97.8 (3450)	**9913** (5834)	**367** (3952)	**300** (3233)	**220** (2371)	**179** (1923)
99.2 (3500)	**10056** (5919)	**372** (4009)	**305** (3280)	**223** (2405)	**181** (1950)
100.6 (3550)	**10200** (6004)	**378** (4066)	**309** (3327)	**227** (2440)	**184** (1978)
102.1 (3600)	**10344** (6088)	**383** (4124)	**313** (3374)	**230** (2474)	**186** (2006)
103.5 (3650)	**10487** (6173)	**388** (4181)	**318** (3421)	**233** (2509)	**189** (2034)
104.9 (3700)	**10631** (6257)	**394** (4238)	**322** (3468)	**236** (2543)	**192** (2062)
106.3 (3750)	**10775** (6342)	**399** (4295)	**327** (3514)	**239** (2577)	**194** (2090)
107.7 (3800)	**10918** (6426)	**404** (4353)	**331** (3561)	**243** (2612)	**197** (2118)
109.1 (3850)	**11062** (6511)	**410** (4410)	**335** (3608)	**246** (2646)	**199** (2145)
110.6 (3900)	**11206** (6595)	**415** (4467)	**340** (3655)	**249** (2680)	**202** (2173)
112.0 (3950)	**11349** (6680)	**420** (4525)	**344** (3702)	**252** (2715)	**204** (2201)
113.4 (4000)	**11493** (6765)	**426** (4582)	**348** (3749)	**255** (2749)	**207** (2229)
116.2 (4100)	**11780** (6934)	**436** (4696)	**357** (3843)	**262** (2818)	**212** (2285)
119.1 (4200)	**12068** (7103)	**447** (4811)	**366** (3936)	**268** (2887)	**217** (2340)
121.9 (4300)	**12355** (7272)	**458** (4925)	**374** (4030)	**275** (2955)	**223** (2396)
124.7 (4400)	**12642** (7441)	**468** (5040)	**383** (4124)	**281** (3024)	**228** (2452)
127.6 (4500)	**12930** (7610)	**479** (5155)	**392** (4217)	**287** (3093)	**233** (2508)
130.4 (4600)	**13217** (7779)	**490** (5269)	**401** (4311)	**294** (3161)	**238** (2563)
133.2 (4700)	**13504** (7948)	**500** (5384)	**409** (4405)	**300** (3230)	**243** (2619)

*Minimum airflow for the RZ product

**Minimum airflow for units equipped with gas or electric heat is 9550 CFM.

Table 17: R-454B Refrigerant Temperature-Pressure Chart (Metric)

°C	KPA	°C	KPA	°C	KPA	°C	KPA	°C	KPA
-6.7	484.5	**8.3**	843.3	**23.3**	1348.0	**38.3**	2034.6	**53.3**	2946.9
-6.1	495.6	**8.9**	859.3	**23.9**	1370.0	**38.9**	2064.1	**53.9**	2985.7
-5.6	506.9	**9.4**	875.3	**24.4**	1392.2	**39.4**	2093.9	**54.4**	3024.9
-5.0	518.2	**10.0**	891.6	**25.0**	1414.6	**40.0**	2123.9	**55.0**	3064.5
-4.4	529.7	**10.6**	908.1	**25.6**	1437.3	**40.6**	2154.3	**55.6**	3104.5
-3.9	541.5	**11.1**	924.8	**26.1**	1460.3	**41.1**	2185.0	**56.1**	3144.9
-3.3	553.3	**11.7**	941.7	**26.7**	1483.5	**41.7**	2216.1	**56.7**	3185.8
-2.8	565.4	**12.2**	958.8	**27.2**	1507.0	**42.2**	2247.4	**57.2**	3227.0
-2.2	577.6	**12.8**	976.2	**27.8**	1530.8	**42.8**	2279.1	**57.8**	3268.6
-1.7	589.9	**13.3**	993.7	**28.3**	1554.8	**43.3**	2311.1	**58.3**	3310.7
-1.1	602.5	**13.9**	1011.5	**28.9**	1579.0	**43.9**	2343.5	**58.9**	3353.2
-0.6	615.2	**14.4**	1029.4	**29.4**	1603.6	**44.4**	2376.2	**59.4**	3396.1
0.0	628.1	**15.0**	1047.6	**30.0**	1628.4	**45.0**	2409.2	**60.0**	3439.5
0.6	641.2	**15.6**	1066.0	**30.6**	1653.5	**45.6**	2442.6	**60.6**	3483.3
1.1	654.4	**16.1**	1084.7	**31.1**	1678.8	**46.1**	2476.2	**61.1**	3527.6
1.7	667.8	**16.7**	1103.5	**31.7**	1704.4	**46.7**	2510.3	**61.7**	3572.3
2.2	681.4	**17.2**	1122.6	**32.2**	1730.4	**47.2**	2544.7	**62.2**	3617.4
2.8	695.2	**17.8**	1141.9	**32.8**	1756.6	**47.8**	2579.4	**62.8**	3663.0
3.3	709.2	**18.3**	1161.5	**33.3**	1783.0	**48.3**	2614.5	**63.3**	3709.2
3.9	723.3	**18.9**	1181.3	**33.9**	1809.9	**48.9**	2650.0	**63.9**	3755.7
4.4	737.6	**19.4**	1201.3	**34.4**	1836.9	**49.4**	2685.7	**64.4**	3802.7
5.0	752.2	**20.0**	1221.5	**35.0**	1864.3	**50.0**	2721.9	**65.0**	3850.3
5.6	766.9	**20.6**	1242.0	**35.6**	1891.9	**50.6**	2758.5	**65.6**	3898.4
6.1	781.8	**21.1**	1262.8	**36.1**	1919.8	**51.1**	2795.4		
6.7	796.9	**21.7**	1283.7	**36.7**	1948.1	**51.7**	2832.7		
7.2	812.2	**22.2**	1304.9	**37.2**	1976.7	**52.2**	2870.4		
7.8	827.7	**22.8**	1326.3	**37.8**	2005.5	**52.8**	2908.4		

Table 18: R-454B Refrigerant Temperature-Pressure Chart (Imperial)

°F	PSIG	°F	PSIG	°F	PSIG	°F	PSIG	°F	PSIG
20	70.3	**47**	122.3	**74**	195.5	**101**	295.1	**128**	427.4
21	71.9	**48**	124.6	**75**	198.7	**102**	299.4	**129**	433.0
22	73.5	**49**	127.0	**76**	201.9	**103**	303.7	**130**	438.7
23	75.2	**50**	129.3	**77**	205.2	**104**	308.0	**131**	444.5
24	76.8	**51**	131.7	**78**	208.5	**105**	312.5	**132**	450.3
25	78.5	**52**	134.1	**79**	211.8	**106**	316.9	**133**	456.1
26	80.3	**53**	136.6	**80**	215.2	**107**	321.4	**134**	462.0
27	82.0	**54**	139.1	**81**	218.6	**108**	326.0	**135**	468.0
28	83.8	**55**	141.6	**82**	222.0	**109**	330.6	**136**	474.1
29	85.6	**56**	144.1	**83**	225.5	**110**	335.2	**137**	480.2
30	87.4	**57**	146.7	**84**	229.0	**111**	339.9	**138**	486.3
31	89.2	**58**	149.3	**85**	232.6	**112**	344.6	**139**	492.6
32	91.1	**59**	151.9	**86**	236.2	**113**	349.4	**140**	498.8
33	93.0	**60**	154.6	**87**	239.8	**114**	354.3	**141**	505.2
34	94.9	**61**	157.3	**88**	243.5	**115**	359.1	**142**	511.6
35	96.9	**62**	160.1	**89**	247.2	**116**	364.1	**143**	518.1
36	98.8	**63**	162.8	**90**	251.0	**117**	369.1	**144**	524.6
37	100.8	**64**	165.6	**91**	254.8	**118**	374.1	**145**	531.3
38	102.9	**65**	168.5	**92**	258.6	**119**	379.2	**146**	538.0
39	104.9	**66**	171.3	**93**	262.5	**120**	384.3	**147**	544.7
40	107.0	**67**	174.2	**94**	266.4	**121**	389.5	**148**	551.5
41	109.1	**68**	177.2	**95**	270.4	**122**	394.8	**149**	558.4
42	111.2	**69**	180.1	**96**	274.4	**123**	400.1	**150**	565.4
43	113.4	**70**	183.1	**97**	278.4	**124**	405.4		
44	115.6	**71**	186.2	**98**	282.5	**125**	410.8		
45	117.8	**72**	189.3	**99**	286.7	**126**	416.3		
46	120.0	**73**	192.4	**100**	290.9	**127**	421.8		

5.10.7. Refrigerant Filter Driers

Each refrigerant circuit contains a replaceable core liquid line filter drier. Replace the filter when there is an excessive pressure drop across the assembly or moisture is indicated in a liquid line sight glass.

Table 19: Filter Drier Maximum Pressure Drop

Circuit Loading	Max Pressure Drop
100%	34.5 kPa (5 psig)
50%	17.2 kPa (2.5 psig)

The filter driers are provided with pressure taps and shutoff valves for isolation when changing the core. For safety purposes, a service manifold must be attached before performing filter maintenance.

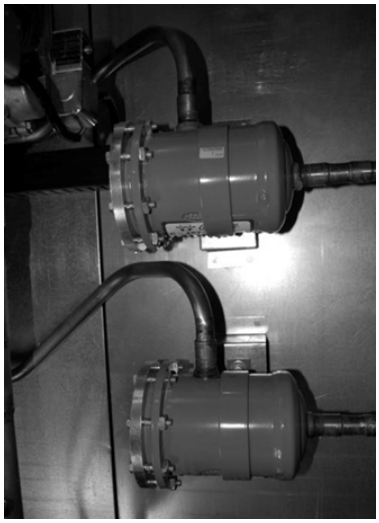

Figure 24: Replaceable Core Liquid Filters/Driers Suction Filter

To protect the compressors from contaminants during testing and startup, AAON factory installs pleated replaceable core suction line filters on RZ Series units.

Figure 25: RPE-48-BD Filter Element

One month after startup, remove the RPE-48-BD filter element for the lowest possible pressure drop. Removing the suction line filter improves the efficiency and capacity of the unit. AAON installs isolation ball valves on both sides of the suction line filter, so the complete system will not have to be reclaimed/evacuated.

5.10.8. Suction Filter Removal Instructions

1. Shut down the operation of the unit
2. Close both shut-off valves to isolate the suction filter
3. Reclaim the refrigerant from the suction filter section
4. Remove the bolts from the suction filter end plate.

Figure 26: Close the Isolation Valves around the Suction Filter

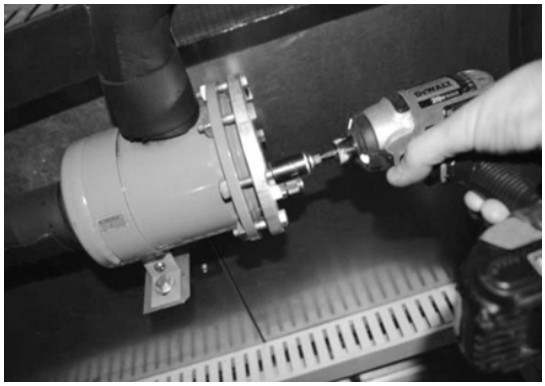

Figure 27: Remove the Bolts

5. Remove the pleated filter assembly

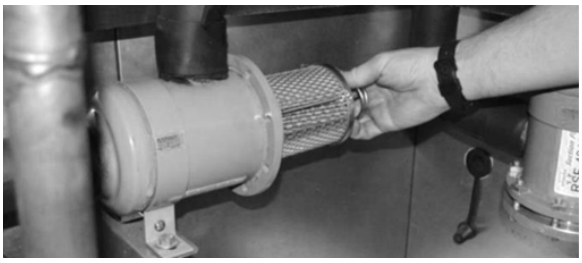

Figure 28: Remove the Pleated Filter

6. Replace the suction filter end plate and bolts
7. Evacuate the suction filter assembly to 300 microns
8. Open both shut-off valves

5.10.9. VFD Controlled Condenser Fan Startup

When selected, condenser fan VFDs are factory provided and factory programmed. The VFDs receive input from pressure transducers on each refrigerant circuit and vary the fan speed based on the pressure inputs to maintain a discharge (head) pressure. The standard pressure setpoint is 2.34 Mpa (340 psi) for standard air-cooled systems and 2.76 Mpa (400 psi) for modulating hot gas reheat air-cooled systems. The AAON Condenser Head Pressure Module is used to maintain a discharge pressure. The VFD is factory wired to the output of the AAON Module. See AAON literature for additional information. (https://www.aaon.com/Controls).

5.10.10. Low Sound Condenser Fan EC Motor Startup

The AAON Condenser Head Pressure Module is used for variable-speed control of the motor to maintain a specific head pressure. The motor must be factory wired to the PWM outputs of the AAON Condenser Head Pressure Module. See AAON literature for further information (https://www.aaon.com/Controls).

Note: High voltage wires out of the motor: Black & Brown - 1 Phase Line Voltage Green - Ground

Low control voltage wires out of the motor: Blue - Common, Yellow - Variable Speed Control

Table 20: EC Condenser Fan Cycling Options

Color	Terminal	Customer Connection	Option 1	Option 2	Option 3	Option 4	Option 5
Black	0.50 BWS	L1	208-230 VAC	208-230 VAC	208-230 VAC	208-230 VAC	208-230 VAC
Brown	0.50 BWS	L2	208-230 VAC	208-230 VAC	208-230 VAC	208-230 VAC	208-230 VAC
Green	#10 EYELET	Ground	GND	GND	GND	GND	GND
Blue	0.50 BWS	Common	Common	24 VAC	24 VAC	24 VAC	24 VAC
Yellow	0.50 BWS	Signal	PWM		24 VAC		24 VAC
White	0.50 BWS	Signal				24 VAC	24 VAC
Orange	0.50 BWS	Signal		24 VAC		24 VAC	
RPM			300-1100	300	500	850	1100
Rotation			CCW	CCW	CCW	CCW	CCW
ECM Toolbox ID			Variable	Speed 4	Speed 3	Speed 2	Speed 1
20% PWM RPM			300				
100% PWM RPM			1100				

5.11. Operation

Unit operations must be controlled with a unit controller. Operations must be terminated at the unit and never at the main power supply, with the exception of an emergency or a complete shutdown of the unit.

5.11.1. Refrigerant Detection System

Each unit is equipped with a Refrigerant Detection System (RDS) to detect leaked refrigerant within the conditioned airstream and in the cabinet. The RDS sensors are connected to a corresponding mitigation board. The RDS sensors will send an alarm to the mitigation board if they detect a refrigerant leak. Each A2L mitigation board is equipped with an alarm output in the form of an NO/NC relay.

Applications using AAON VCCX-454 controls:

In the event of an airstream RDS alarm, the compressor operation is disabled, and the indoor blower is enabled to provide circulation airflow in accordance with UL 60335-2-40. In the event of a Cabinet or Gas Heat RDS alarm, the operation of the compressor and gas heat is disabled. The indoor blower, and any form of heat other than gas, will resume normal operation. The RDS alarm outputs are available via BACNet communication through the VCCX-454 controller.

For applications not using AAON VCCX-454 controls, the mitigation board outputs are wired to the low-voltage terminal block.

In all cases, the mitigation board and VCCX-X board remain in the alarm state for five minutes after the RDS sensor has cleared the alarm below the concentration setpoint.

For VAV and zone damper applications, the VAV boxes and zone dampers must be wired to the mitigation board output to open all VAV boxes and zone dampers for the required circulation airflow to prevent the stagnation of leaked refrigerant. Other applications requiring additional refrigerant leak mitigation measures, as required by local code and ASHRAE 15, may be notified of detected refrigerant by this alarm output.

Verify the functionality of the RDS by removing the sensor connection at the mitigation board and ensuring that all sequences above take place, including the opening of VAV boxes and zone dampers and additional mitigation procedures, if applicable. Refer to the A2L Mitigation Board Technical Guide for the sensor location. Make sure that the plug clip is fully seated when reconnecting the cable.

Note: Smoke control procedures may override the RDS alarm functions.

CAUTION

Refrigerant sensors may only be replaced with manufacturer-approved sensors.

CAUTION

Certain applications may allow the unit to bring in unconditioned air. Freeze protection needs to be considered in the final application.

CAUTION

Additional mitigation procedures or fault conditions initiated outside of AAON controls are the responsibility of the Building Engineer and must give appropriate priority in accordance with local codes.

5.11.2. Packaged DX Cooling Operation

When a call for cooling (G and Y1, Y2, etc.) is made, the supply fan motors and compressors will energize.

WARNING

Compressor Cycling:

3 Minute Minimum Off Time - To prevent the motor from overheating, compressors must cycle off for a minimum of 3 minutes.

5 Minute Minimum on Time - To maintain the proper oil level, compressors must cycle on for a minimum of 5 minutes.

The cycle rate must not exceed 7 starts per hour.

Note: When using field controls, any variable capacity compressors must run at 100% for one minute when starting.

5.11.3. Indirect Fire Unit Gas Heater Operation

When heat (G and W1, W2, etc.) is called for, the combustion motor starts, and the ignition control is energized. The control sends 24 VAC to the gas valve and high voltage to the igniter. If a burner flame has been detected within 10 seconds, the spark is extinguished, and the flame continues. If a flame has not been detected after 10 seconds, the gas valve closes, the spark ceases, and the induced draft blower continues to purge the heat exchanger. After 45 seconds of purging, the ignition system will attempt to light the burners again. Should no flame be detected after 3 tries, the ignition control will lock out the system. Power to the ignition control shall be cycled to reset the heater control.

On a fault, the gas train is shut down by a main limit located in the heat exchanger area or by an auxiliary limit mounted in the supply fan compartment.

Refrigerant sensors are located near the gas heat section to detect leaked refrigerant. In the event of a refrigerant leak in the gas heat or compressor section of the unit, the gas heat operation and compressor operation are disabled for five minutes until the leak is cleared. The indoor fan will continue to operate in its state prior to the alarm.

5.11.4. Direct Fire Unit with Return Air Gas Heater Operation

If the unit is in an off state or in a full economizer mode state before entering the heating mode, a purging sequence is necessary.

1. Ensure that the outside air damper is closed completely, making the unit operate on 100% return air.
2. Check that the supply fan modulating output is set to the heating mode and is configured for CAV heating.
3. Enable the supply fan if it has not already been enabled.
4. Wait up to 30 seconds for the supply fan proving switch to engage.
5. An airflow alarm will go off if the supply fan proving switch does not engage within 30 seconds.
6. Continue running with the outdoor damper closed and the supply fan operating for 3 minutes.

5.11.5. Direct Fire Unit Gas Heater Operation

1. Pre-purge the burner with fresh air for 30 seconds. The ignition will not proceed if a flame is detected.
2. Pre-ignition the sparker for 2 seconds in air only.
3. Open the pilot gas valve for 10 seconds and verify the pilot flame detection. A safety shutdown occurs if the pilot is not detected by the end of 10 seconds.
4. When the pilot flame is proven, the sparker is deactivated, main gas valves one and two are opened, and the vent valve is closed.
5. The pilot valve is deactivated after a 10-second main flame establishment time.
6. The modulating gas valve can modulate to maintain capacity based on a 0–10 VDC input to the modulating gas valve controller (the modulating gas valve controller sends a 0-20 signal to the modulating gas valve).

5.11.6. Electric Heating Operation

When a call for heating (G and W1, W2, etc.) is made, the supply fan motors and electric resistance heaters energize. Heating is accomplished by passing the electrical current through a specified amount of resistance heaters, which will produce the required heat.

On a fault condition, the main limit, located in the supply air or the auxiliary limit, which is downstream of the supply fan, will remove power from all contactors.

5.11.7. Steam or Hot Water Preheating and Heating Operation

Valve control for the steam and hot water heating coils is by others. Heating is accomplished by passing steam or hot water through the steam or hot water coil assembly.

5.11.8. Chilled Water or Non-Compressorized DX Cooling Operation

Controls for chilled-water-cooling coils and non-compressorized DX coils are maintained by others.

5.12. Maintenance

(See back of the manual for maintenance log)

At least once each year, a qualified service technician must check out the unit. Fans, evaporator coils, and filters must be inspected monthly.

5.12.1. Supply Fans

WARNING

Electric shock hazard. Shut off all electrical power to the unit to avoid shock hazards or injuries from rotating parts.

CAUTION

Blower wheels and bands must be inspected for excessive dust build up periodically and cleaned if required. Excessive dust build up on the blower wheels may cause an unbalanced state, leading to vibration and/or a component failure. Damages due to excessive dust build up will not be covered under the factory warranty.

5.12.1.1. Lubrication

All original fan motors and bearings are furnished with factory lubrication. Some applications will require that bearings be re-lubricated periodically. The lubrication schedule depends on the operating duty, temperature variations, or other severe atmospheric conditions.

Re-lubricate the bearings at normal operating temperatures, but not when running. Rotate the fan shaft by hand and only add enough grease to purge the seals. DO NOT OVER LUBRICATE.

5.12.1.2. Recommended Greases:

SHELL OIL - DOLIUM R
CHEVRON OIL - SRI No. 2
TEXACO INC. - PREMIUM RB

5.12.1.3. Redundant Fan

In the case that the unit was ordered with Stand by Redundant Fans, at least once a year confirm the condition of the standby fan.

5.12.2. DX Cooling

Set the unit controls to the cooling mode of operation with the supply fans on. Check the fans for the correct operating direction, amperage, and voltage. Check the compressor operation, rotation, amperage, and voltage on the unit nameplate (the amperage is found on the load side of the compressor contactor).

5.12.3. Condensate Drain Pans

Drain pans will have moisture present and require periodic cleaning to prevent microbial growth. Cleaning the drain pans will also prevent any possible plugging of the drain lines and overflow of the pan itself. Cleaning the drain pans and inside of the unit must only be done by qualified personnel.

5.12.4. Filter Replacement

A monthly filter inspection is required to maintain optimum unit efficiency.

Replace the filter media monthly. Filters are located upstream of the evaporator coil, upstream of the blow-through supply blowers, or in the final filter position. Replace the filters with the size indicated on each filter, or as shown in the filter charts in the back of this manual. The arrow on the replacement filters must point in the direction of airflow.

5.12.5. Brazed Plate Heat Exchanger Cleaning

Because of a normally high degree of turbulence in brazed plate heat exchangers, many applications in the heat exchanger channels are self-cleaning. For applications that are not self-cleaning (i.e., hard water at high temperatures, etc.) or applications where additional cleaning is desired, it is possible to clean the brazed plate heat exchanger by circulating a cleaning liquid.

Use a tank with weak acid, 5% phosphoric acid (H_3PO_4) or, if the exchanger is frequently cleaned, 5% oxalic acid ($H_2C_2O_4$). Pump the cleaning liquid through the exchanger. For optimum cleaning, the cleaning solution flow rate must be a minimum of 1.5 times the normal flow rate, preferably in a back-flush mode. After cleaning, the heat exchanger must be rinsed with clean water. A solution of 1-2% sodium hydroxide (NaOH) or sodium bicarbonate (NaHCO) before the last rinse ensures that all acid is neutralized.

5.12.6. Air-Cooled Condenser

The air-cooled condenser section rejects heat by passing outdoor air over the microchannel coils to cool the hot refrigerant gas from the compressors. The heated air then discharges from the top of the section through the axial flow fans.

Inspect the condenser coils annually to ensure unrestricted airflow. If the installation has a large amount of airborne dust or other material, clean the condenser coils with water by spraying the coils in the opposite direction of the airflow. Be careful not to damage the coils.

5.12.7. E-Coated Coil Cleaning

A documented routine cleaning of the e-coated coils is required to maintain the coating warranty coverage for the fin, tube, and microchannel coils. See the AAON E-Coated Coil Maintenance Record sheet for more information.

WARNING

Electric shock hazard. Shut off all electrical power to the unit to avoid shock hazard or injury from rotating parts.

Surface loaded fibers or dirt must be removed prior to the water rinse to prevent the restriction of airflow. If users are unable to backwash the side of the coil opposite the coil's entering air side, then any surface-loaded fibers or dirt must be removed with a vacuum cleaner. If a vacuum cleaner is not available, a ***soft non-metallic*** bristle brush may be used. In either case, the tool must be applied in the direction of the fins. Coil surfaces can be easily damaged (fin edges bent over) if the tool is applied across the fins.

The use of a water stream, such as a garden hose, against a surface loaded coil will drive the fibers and dirt into the coil. This will make cleaning efforts more difficult. Surface loaded fibers must be completely removed prior to using a low-velocity clean water rinse.

A ***monthly*** clean water rinse is recommended for coils applied in coastal or industrial environments to help remove chlorides, dirt, and debris. It is very important when rinsing, that the water temperature is less than 54.4°C (130°F) and the water pressure is less than 689.5 kpa (100 psig) to avoid damaging the fin edges. An elevated water temperature (water that exceeds 54.4°C [130°F]) will reduce surface tension, increasing the ability to remove chlorides and dirt.

CAUTION

High-velocity water from a pressure washer or compressed air must only be used at a very low pressure to prevent fin and/or coil damage. The force of the water or air jet may bend the fin edges and increase the airside pressure drop. This may also result in reduced unit performance or nuisance unit shutdowns may occur.

Note: Quarterly cleaning is essential to extend the life of an e-coated coil and is required to maintain coating warranty coverage.

Coil cleaning should be part of the unit's regularly scheduled maintenance procedures. Failure to clean an e-coated coil will void the warranty and may result in reduced efficiency and durability.

CAUTION

Harsh chemicals, household bleach, or acid cleaners must not be used to clean outdoor or indoor e-coated coils. These cleaners can be very difficult to rinse out of the coil and can accelerate corrosion and attack the e-coating. If there is dirt below the surface of the coil, use the recommended coil cleaners to aid in the removal process.

For routine quarterly cleaning, clean the coil with the approved coil cleaner below. After cleaning the coils with the approved cleaning agent, use the approved chloride remover to remove soluble salts and revitalize the unit.

5.12.7.1. Recommended Coil Cleaner

The following cleaning agent, when used in accordance with the manufacturer's directions on the container for proper mixing and cleaning, has been approved for use on e-coated coils to remove mold, mildew, dust, soot, greasy residue, lint, and other particulates:

Enviro-Coil Cleaner: AAON PN: V82540
GulfClean ™ Coil Cleaner ; AAON PN: G074480

5.12.7.2. Recommended Chloride Remover

GulfClean Salt Reducer™; AAON PN: G074490

GulfClean Salt Reducer™ is used to remove soluble salts from the e-coated coil. This product is not intended for use as a degreaser. Any grease or oil film must be removed first with GulfClean ™ Coil Cleaner.

Remove Barrier – Ensure the power to the unit is off and locked out. Clean the area around the unit if needed to ensure leaves, grass, or loose debris will not be blown into the coil. Soluble salts adhere to the substrate. For the effective use of this product, the product must come into contact with the salts. These salts may be beneath soil, grease, or dirt; therefore, these barriers must be removed before applying this product. As in all surface preparation, the best work yields the best results.

Application - Apply GulfClean ™ Coil Cleaner directly onto the substrate. Sufficient product must be applied uniformly across the substrate to thoroughly wet out the surface, with no areas missed. This may be accomplished by using a pump-up sprayer or a conventional spray gun. Apply the cleaner to the unit's interior air exiting side coil surfaces first. Work in sections/panels, moving from side to side and top to bottom. Allow the cleaning solution to soak for 5 to 10 minutes. Then move on to the exterior using the same method.

Rinse - Use a pressurized potable water source such as a garden hose (< 689.5 kpa [100 psi]) to rinse the coils and continue to work in sections/panels. Continue until all coil areas on the inside of the unit have been rinsed.

Note: Coils must always be cleaned/back flushed, opposite to the airflow, to avoid impacting the dirt into the coil.

Repeat these steps with GulfClean ™ Salt Reducer. When finished, replace all of the panels and tops that were removed.

5.12.8. Microchannel Coil Cleaning

Cleaning the microchannel coils is necessary in all locations. The condenser coil must be cleaned at least once a year. In locations where debris or dirt/grease build up is common, it may be necessary to clean the coils more often. Proper cleaning procedures must be followed at every cleaning interval. Using improper cleaning techniques or incorrect chemicals will result in coil damage, reduced system performance, and potential leaks requiring coil replacement.

Documented routine cleaning of microchannel coils with factory-provided e-coating is required to maintain coating warranty coverage. Use the E-Coated Coil Cleaning section for details on cleaning the e-coated coils.

Field-applied coil coatings are not recommended with microchannel coils.

5.12.8.1. Allowed Chemical Cleaners and Procedures

AAON recommends certain chemicals be used to remove the buildup of grime and debris on the surface of microchannel coils. These chemicals have been tested for performance and safety and are the only chemicals that AAON warrants as correct for cleaning microchannel coils.

There are two procedures outlined below to clean the coils effectively without damaging them. The use of any other procedure or chemical may void the warranty for the unit where the coil is installed.

Note: With all procedures, make sure the unit is off before starting.

WARNING

Electric shock hazard. Shut off all electrical power to the unit to avoid shock hazard or injury from rotating parts.

The water pressure used to clean must not exceed 689.5 kpa (100 psi), from no closer than 15.25 centimeters (6 inches) from the coils, and with the water aimed perpendicular to the coils.

5.12.8.1.1. #1 Simple Green

Simple Green is available from AAON Parts and Supply (Part# T10701) and is biodegradable with a neutral 6.5 pH. A 4-to-1 solution is recommended. Use the following procedure for proper cleaning:

1. Rinse the coil completely with water. Use a hard spray from the fan side of the coil, but be careful not to bend or damage the fins. A spray that is too hard will bend the fins.
2. Use a pump sprayer filled with a mix of four-parts water to one-part Simple Green to spray the air inlet face of the coil. Be sure to cover all areas of the face of the coil.
3. Allow the coil to soak in the solution for 10-15 minutes.
4. Rinse the coil with water as in step one.
5. Repeat as necessary.

5.12.8.1.2. #2 Water Flush

This procedure can be used when the only material to cause the coil to need cleaning is debris from plant material that has impinged the coil face.

1. Rinse the coil completely with water. Use a hard spray from the fan side of the coil, but be careful not to bend or damage the fins.
2. Spray and rinse the coil from the face.

CAUTION

Use pressurized clean water. The pressure must not exceed 689.5 kPa (100 psi). The nozzle must be positioned 15.25 centimeters (6") and perpendicular to the coil face. Failure to do so could result in coil damage.

5.12.8.1.3. Application Examples

The two procedures can be used to clean microchannel coils. They will fit with the application depending on the area, specific applications will work better than others. For example, in some areas where the spring/summer has a large cottonwood bloom, a Water Flush might work fine if the unit is installed on an office building and no other environmental factors apply.

Generally, the best and broadest based procedure is Simple Green. The grease-cutting effect of Simple Green is good for restaurant applications.

5.12.8.2. Other Coil Cleaners

There are many cleaners on the market for condenser coils. Before using any cleaner that is not covered in this section, users must get written approval from the AAON warranty and service department. The unauthorized use of non-approved chemicals will void the warranty.

AAON testing has determined that unless a chemical has a neutral pH (6-8), it must not be used.

Take caution before using any product that claims to be a foaming cleaner. The foam that is generated is caused by a chemical reaction to the aluminum fin material on the tube and fin coils, and with the fin, tube, and coating material on microchannel coils.

Microchannel coils are robust in many ways, but like any component, they must be treated correctly. This includes cleaning the coils correctly to give optimal performance over many years.

5.12.9. Roofing

The cleaning procedures outlined here use relatively benign ingredients. When working with a rooftop unit, care must be taken to make sure the chemicals will not adversely affect the roof coating. Checking with the roofing supplier/manufacturer is the best way to proceed. If the roofing supplier/manufacturer is not available, testing the chemicals on the roof coating is recommended before proceeding.

Commercial roofing material manufacturers using PVC and EPDM have been contacted and indicated that there should be no problem with any of the procedures outlined above.

5.12.10. Refrigerant Removal and Evacuation

If the removal of refrigerant is required for any maintenance or servicing, conventional procedures must be used, and the removal of refrigerant must be in accordance with local and national regulations. Safety precautions must be taken prior to beginning work to ensure that the risk of fire due to flammable refrigerants is minimized.

Work should be done under a controlled procedure to reduce the amount of refrigerant vapor present while work is being performed. All maintenance staff and others working in the area must be instructed on the nature of work being performed. Avoid working in a confined space.

CAUTION

Prior to performing work that can result in the release of a flammable refrigerant, inspect the area to ensure it is free of any potential ignition sources. "No Smoking" signs should be displayed while performing work.

Check the area with a refrigerant detector suitable for use with the refrigerant prior to, and during, work to be aware of a potentially flammable environment. Keep a dry powder or CO_2 fire extinguisher nearby if any hot work is being performed.

Ensure that the work area is sufficiently ventilated before breaking into the system. Ventilation must continue throughout all of the work. Ensure that the ventilation safely removes any flammable refrigerant to an area that will adequately disperse the refrigerant to avoid the concentration rising above flammable levels.

The refrigerant must be recovered into the correct recovery cylinders in accordance with local and national regulations. Recovery cylinders must be labeled properly. Ensure that the correct number of cylinders are available for holding the entire charge of the system. Cylinders must have pressure relief and shut-off valves that are in proper working order. Fully evacuate a recovery cylinder before use.

The recovery equipment must be in good working order with a set of instructions concerning the equipment that is at hand. Ensure that the equipment is suitable for the recovery of the flammable refrigerant used. If in doubt, consult the manufacturer. In addition, a set of calibrated weighing scales must be available and in good working order. Ensure that the hoses are complete with leak-free disconnect couplings and in good condition.

When removing the refrigerant to open the system, evacuate the system and flush or purge the system continuously with an inert gas when using a flame to open the circuit. The system must be purged with oxygen-free nitrogen to render the appliance safe for flammable refrigerant. Compressed air or oxygen must not be used. When pulling a vacuum, ensure that the outlet of the vacuum pump is not near any potential ignition source and is in a well-ventilated area.

The recovered refrigerant is to be processed according to local legislation in the correct recovery cylinder, with a relevant waste transfer note arranged. Do not mix refrigerants in recovery units or in cylinders.

If compressors or compressor oils are removed, ensure that they have been evacuated to an acceptable level to make certain that the flammable refrigerant does not remain within the lubricant. Do not heat the compressor body using an open flame or other ignition source to accelerate this process. Remove any drained oil safely.

5.13. Options

(See back of the manual for maintenance log)

5.13.1. Heating Coils

One or two row hot water and steam heating and preheating coils can be factory installed.

WARNING

Piping, pressure limiting devices, backflow preventers, and all other safety requirements shall be in accordance with national and local codes.

CAUTION

The unit shall have proper sealing of the water piping entries into the unit. Failure to seal the entries may result in damage to the unit and property.

All valve controls for heating operation are field supplied and installed. Hot water and steam coil connections are spun copper tube.

Water coils must not be subjected to entering air temperatures below 3.3°C (38°F) to prevent coil freeze-up. If the air temperature across the coil is going to be below this value, use a glycol solution to match the coldest air expected.

Table 21: Hot Water Coil Connection Sizes

Model (RZA-)	Heating Coil Size	Hot Water Coil Connection Size	Coil Quantity*
045, 055, 065, 075	A, B, C, D	2-1/8"	1/1
090, 105, 120, 130, 140	A	2-1/8"	2/2
	B, C, D	2-1/8"	1/1
145, 160, 180, 200, 220, 240	A, B	2-1/8"	2/2
	C, D	2-1/8"	1/1

Note: 2 1/8" = 54mm

*In/Out Connections

Table 22: Steam Distributing Coil Connection Sizes

Model (RZA-)	Heating Coil Size	Steam Coil Connection Size	Coil Quantity*
045, 055, 065, 075	A	2-1/8"	2/2
	B, C, D	2-1/8"	1/1
090, 105, 120, 130, 140	A	2-1/8"	4/4
	B	2-1/8"	2/2
	C, D	2-1/8"	1/1
145, 160, 180, 200, 220, 240	A	2-1/8"	4/4
	B,C	2-1/8"	2/2
	D	2-1/8"	1/1

Note: 2 1/8" = 54mm

*In/Out Connections

5.13.2. Chilled Water Coil

Four, six, or eight row chilled-water-cooling coils can be factory installed. All valve controls for cooling operation are field supplied and installed. Chilled water coil connections are spun copper tube.

Table 23: Chilled Water Coil Connection Sizes

Model (RZA-)	Chilled Water Coil Connection Size	Coil Quantity*
045, 055, 065, 075, 090, 105, 120, 130, 140	2 5/8"	4/4
145, 160, 180, 200, 220, 240	2 5/8"	8/8

Note: 2 5/8" = 66.7 mm

*In/Out Connections

Table 24: Min. and Max. Water Pressures and Temperatures

	Chilled Water	Hot Water
Min. Entering Air	15.6°C (60°F)	4.4 °C (40°F)
Max Entering Air	37.8°C (100°F)	26.7°C (80°F)
Min. Entering Water	1.7°C (35°F)	60°C (140°F)
Max Entering Water	18.3°C (65°F)	93.3°C (200°F)
Min. Water Pressure	0 kpa (15 psig)	
Max Water Pressure	2068kpa (300 psig)	

5.13.3. Packaged Direct Expansion (DX) Coils

WARNING

Compressor Cycling:
3 Minute Minimum Off Time - To prevent the motor from overheating, compressors must cycle off for a minimum of 3 minutes.
5 Minute Minimum on Time - To maintain the proper oil level, compressors must cycle on for a minimum of 5 minutes.
The cycle rate must not exceed 7 starts per hour.

All DX refrigeration systems are factory assembled, leak tested, charged with refrigerant, and run tested.

All refrigerant systems include evaporator and condenser coils. Each unit includes replaceable core liquid line filter driers, replaceable suction filters, compressor isolation valves, electronic expansion valves, and variable speed scroll compressors.

CAUTION

Crankcase Heater Operation:
Some units are equipped with compressor crankcase heaters, which must be energized at least 24 hours prior to cooling operation, to clear any liquid refrigerant from the compressors.

Never turn off the main power supply to the unit, unless servicing, or in the event of emergencies or complete shutdown of the unit. When power is cut off from the unit, the crankcase heaters cannot prevent refrigerant migration into the compressors. This means the compressor may cool down, and liquid refrigerant may accumulate in the compressor. The compressor is designed to pump refrigerant gas, and damage may occur when power is restored if liquid enters the compressor.

For units with compressor crankcase heaters, if power to the unit must be off for more than an hour, turn the unit off at the control panel, and leave the unit off until the main power switch has been turned on again for at least 24 hours. This will give the crankcase heater time to clear any liquid accumulation out of the compressor before it is started.

Always control the unit from the control panel, never at the main power supply, except for emergencies or a complete shutdown of the unit.

During the cooling season, if the airflow is reduced due to dirty air filters or any other reason, the cooling coils can get too cold which will cause excessive liquid to return to the compressor. As the liquid concentration builds up, oil is washed out of the compressor, leaving it starved for lubrication. The compressor life will be shortened because of the reduced lubrication and the pumping of excessive amounts of liquid oil and refrigerant.

CAUTION

Polyester (POE) and Polyvinyl ether (PVE) oils are two types of lubricants used in hydrofluorocarbon (HFC) refrigeration systems. Refer to the compressor label for the proper compressor lubricant type.

Air-cooled DX units without a low ambient option, such as condenser fan cycling or the -17.8°C (0°F) low ambient option, will not operate in the cooling mode of operation properly when the outdoor temperature is below 12.8°C (55°F). Low ambient and/or economizer options are required if cooling operation below 12.8°C (55°F) is expected.

Note: Multiple Units with Multiple Unit Controllers

When several heating and cooling units are used to condition a space, all unit controllers must be set in either heating mode, cooling mode, or off. Do not leave part of the units switched to the opposite mode. Cooling-only units must be switched off during the heating season.

5.13.4. Evaporator Coil

WARNING

Electric shock hazard. Shut off all electrical power to the unit to avoid shock hazard or injury from rotating parts.

5.13.4.1. Removal

Isolate the evaporator section and recover the refrigerant in that section. Weigh the amount of refrigerant recovered. Remove the expansion valve bulbs and/or the valve controller from the suction lines. Then, disconnect the suction and liquid line copper connections from the evaporator coil.

Depending on the configuration, remove additional components such as filters, reheat coils, or UV lights to allow the coil to be removed. Remove the screws attaching the access side, back, and top blank-off panels to the evaporator coil and the unit. Lastly, remove the evaporator coil through the door opening.

5.13.4.2. Reinstallation

Place the evaporator coil back in the unit drain pan. There should be about a 6.4 mm (1/4 inch) gap between the upstream side of the coil and the back of the drain pan. Secure the coil to the back wall of the unit with the blank-off panel. Attach the top and access side blank-off panels to the coil.

Connect the suction and liquid copper connections to the evaporator coil. Reinstall the expansion valve bulbs and/or the valve controller on the suction lines. Depending on the configuration, additional components might need to be reinstalled.

Evacuate the evaporator section and return the refrigerant that was previously removed from this section.

See the Adjusting Refrigerant Charge section to check for proper sub-cooling and superheat of the refrigerant systems.

5.13.5. Condenser Fans

Condenser fans are located on top of the unit. The condenser fans and motors can be removed and reinstalled as individual assemblies.

WARNING

Electric shock hazard. Shut off all electrical power to the unit to avoid shock hazard or injury from rotating parts.

WARNING

Improper installation, adjustment, alteration, service, or maintenance can cause property damage, personal injury, or loss of life. Startup and service must be performed by a Factory Trained Service Technician.

5.13.5.1. Removal

Take off the fan grill by removing the screws that attach the grill to the orifice.

Disconnect the condenser fan motor wires. Remove the screws that attach the orifice to the condenser assembly.

With the wires disconnected and the screws removed, the fan, motor, and orifice assembly can be lifted off the unit.

5.13.5.2. Reinstallation

Set the condenser fan, motor, and orifice assembly back into the condenser assembly with the motor wires on the side closest to the control panel.

Attach the orifice to the condenser assembly using all of the points where the screws were removed.

Reconnect the fan motor wires. Attach the fan grill to all of the points where the screws were removed.

5.13.6. Evaporative Condenser

The evaporative cooling equipment rejects heat by evaporating a portion of the recirculated water spray and discharging it from the unit with the hot, saturated air. In the right conditions, this can be substantially more efficient than other condenser setups. It is important to note that this option comes with its own set of maintenance.

As the spray water evaporates, it leaves behind the mineral content and impurities of the supply water. If these residuals are not purged from the water distribution system, they will become concentrated and lead to scaling, corrosion, sludge build up, and biological fouling. A water treatment monitoring and control system has been furnished with this unit. Read the complete manual that has been furnished. All water treatments are a combination of bleed water and a chemical treatment for proper control of the residuals and to prevent any biological contamination.

WARNING

Batch-loading chemicals into the unit is NOT PERMITTED. The control system must regulate the chemical feed.

5.13.6.1. Evaporative Condenser Location

The recirculating water system contains chemical additives for water quality control and removes biological contaminants from the air through the washing action of the water. Personnel exposed to the saturated effluent, drift, or direct contact must use proper precautions. Proper location of the evaporative condenser requires good judgment to prevent the air discharge from entering fresh air intakes or to avoid allowing contaminated building exhaust from entering the condenser.

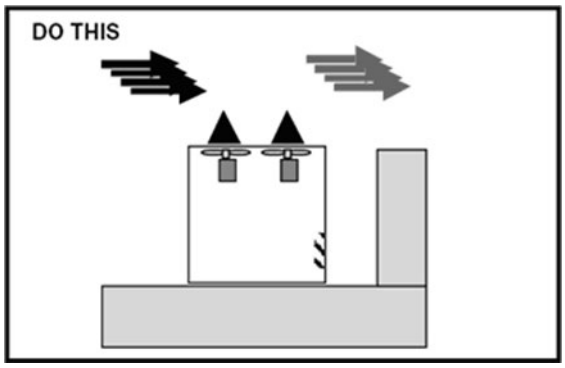

Figure 29: Proper Unit Location

Follow the local and national codes in locating the evaporative condenser. The evaporative condenser sump must be at least 4.6 meters (15 feet) from the nearest intake.

WARNING

The evaporative condenser must be thoroughly cleaned on a regular basis to minimize the growth of bacteria, including Legionella Pneumophila, to avoid the risk of sickness or death. Service personnel must wear proper personal protective equipment. Do not attempt any service unless the fan motor is locked out.

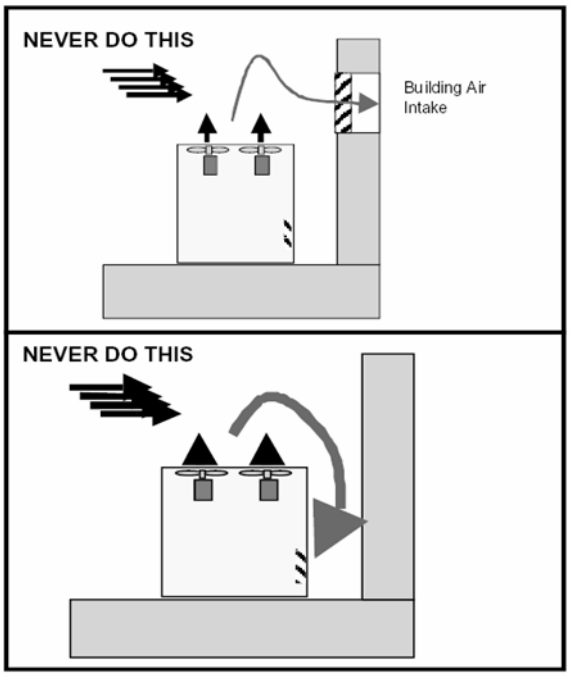

Figure 30: Improper Unit Locations

5.13.6.2. Performance

Improper location of the evaporative condenser may seriously degrade the capacity of the equipment. Make sure the equipment is located so the discharge air from the condenser does not enter the condenser air inlet.

5.13.6.3. Evaporative Condenser Installation

The evaporative condensers require two field water connections for installation: City Makeup Water Connection and Drain Connection. The City Makeup Water uses a 6.4mm (3/4 inch) FPT connection, whereas the drain connection uses a 50.8mm (2 inch) PVC socket connection. Connect the drain to a sanitary sewer or other code-permitted drain. These connections can go through the base or the wall of the unit, depending on the configuration of the unit.

5.13.7. Temporary Drain-Evaporative Condenser

The evaporative condenser design is not sealed to the outdoors. Some rainwater might enter the sump tank during transportation. AAON provides a temporary drain system while the unit is in transit. The temporary drain consists of an adapter that connects a hose from the sump drain to the base drain. This temporary drain must be replaced by a permanent drain once on site.

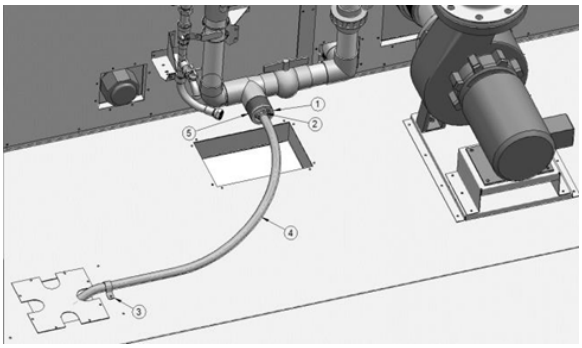

Figure 31: Temporary Drain Components

Once the unit is ready for permanent draining, close the valve and remove the temporary draining system. The components that must be removed are those with number callouts in Figure 31. The drain connection for the permanent draining is 50.8mm (2 inch) PVC.

5.13.8. Condenser Tube Inspection

The coil is leak tested at 3.1 MPa (450 psig) before shipment. AAON will not be responsible for a loss of refrigerant. It is the responsibility of the installer to verify that the system is sealed before charging the unit with refrigerant. If the unit is operated during low ambient temperature conditions, freeze protection for the recirculating water system must be provided.

5.13.9. Evaporative Condenser Operation

5.13.9.1. Pre Start-Up

Do not start the evaporative condenser or compressors without the installation of proper water treatment chemicals. Contact a local water treatment expert for the correct selection of water treatment chemicals, adjustment of chemical feeds, and bleed rates for the unit.

5.13.9.2. Cleanliness

Dirt and debris may accumulate in the sump during shipping and storage. The sump must be cleaned before start up to avoid clogging the water distribution system. Any surfaces that show contamination must only be cleaned with a commercial stainless-steel cleaner to restore the initial appearance. The inlet screens must be inspected for foreign materials.

5.13.9.3. Freeze Protection

This unit is equipped with VFD controls for the condenser fans to prevent water temperatures from dropping below 10°C (50°F) during operation.

5.13.9.4. Recirculating Water System

Electric sump heaters are available to keep the sump water from freezing when the refrigeration system is not operating. An electric resistance heater is supplied in the vestibule when sump heaters are selected.

Note: The condenser must not be operated with the fan on and the pump cycled on and off to maintain head pressure control under any conditions. The unit is equipped with a water-temperature controller, which varies the fan speed to maintain sump water temperature.

This unit is not equipped with a compressor discharge pressure controller for fan speed modulation and cannot be operated without water flow.

5.13.10. Pump Operation

Before the initial start of the pump, check the pump as follows:

1. Check that the pump operates in the direction indicated by the arrow on the pump casing. Check the rotation each time the motor leads have been disconnected.
2. Check all of the connections of the motor and the starting device with the wiring diagram. Check the voltage, phase, and frequency of the line circuit with the motor nameplate.
3. Check the suction and discharge piping, as well as the pressure gauges for proper operation.
4. Turn the rotating element by hand to ensure that it rotates freely.

5.13.11. Running

Periodically inspect the pump while running, but especially after the initial start-up and after repairs.

1. Check the pump and pipes for leaks, and, if found, repair them immediately.
2. Record the pressure gauge readings for future reference.
3. Record the voltage, amperage per phase, and kW.

5.13.12. Condenser Fan Motors

The direct-drive condenser motors on AAON evaporative condensers are 1200-rpm premium efficiency motors controlled by a VFD. These motors are totally enclosed air-over motors with weep holes in the bottom end bell so any condensation can drain out of the motor.

The motors have a small electric resistance heater installed inside the casing to keep the motors warm when they are deactivated. The heaters are designed to keep the interior of the motor -12.2°C (10°F) warmer than the surrounding ambient temperature. This prevents condensation from forming inside the motor. Ensure that the fan is tightly mounted to the motor shaft and the motor mounting bolts are aligned and secure.

5.13.13. Water Makeup Valve

The sump water level is controlled by a set of conductivity probes at different levels in the sump. The standard sump water level is about 38.1 centimeters (15 inches) deep. This water level controller is located in the vestibule behind the condenser pump. There are four conductivity probes in this controller. There is a reference probe (shown as "ref" on the wiring diagram). This probe is one of the two longest probes. The other long probe is the low water level probe (shown as "lo" on the wiring diagram). The medium-length probe is for the medium water level (shown as "med" on the wiring diagram). The short probe is for the high-water level (shown as "hi" on the wiring diagram).

There is a solenoid valve in the makeup water line that is activated by the water level controller. The water level controller determines the level of water in the sump based on the conductivity between the two probes. If the controller sees conductivity between two probes, it knows that water is at least at the level of that probe.

If the water in the sump is below the low probe, it will not allow the condenser pump or the sump heater to operate. It will activate the makeup water solenoid to try to fill the sump, assuming the water is flowing to the unit. Once the water is above the low probe, it will allow the condenser pump and sump heater (if ordered and the ambient temperature is below 4.4°C (40°F)) to operate. The makeup water solenoid remains activated until the water gets to the high-water level. When the water reaches the high-water level, the makeup water solenoid deactivates until the water gets to the medium-water level. In normal operation, the water level swings between the medium and high-water level. The maximum high-water level must be 1inch below the overflow drain, which occurs after the makeup water valve shuts off when the water level reaches the high-level probe.

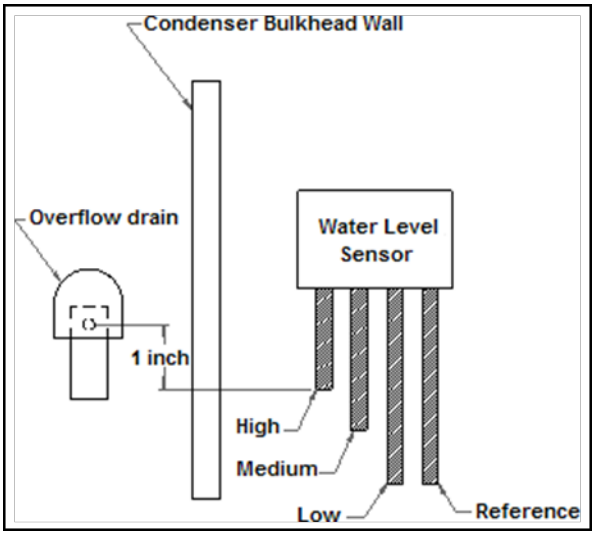

Figure 32: Water Makeup Valve

Maintain the makeup water supply pressure between 103.4 and 413.7 kPa (15 and 60 psig) for proper operation of the valve. The makeup water valve assembly must be inspected monthly and adjusted as required. Replace the valve seat if leakage occurs when the valve is in the closed position.

5.13.14. Water Treatment System

All of AAON's evaporative condensers are equipped with a water treatment system that must be maintained by a local water treatment professional trained in the water treatment of evaporative condensers. This system consists of a controller, three chemical pumps and storage tanks, a conductivity sensor, a motorized ball valve for water bleed, and a water meter.

One chemical pump and tank is typically used to help descale a chemical to prevent scale from forming in the condenser.

The other two pumps and tanks are typically used for two different biocides to kill any microorganisms that could grow in the condenser, and to prevent organisms from becoming resistant to one chemical.

The mineral content of the water must be controlled. All makeup water has minerals in it. As water evaporates from the condenser, these minerals remain. When the mineral content of the water increases, the conductivity of the water increases. The water treatment controller monitors this conductivity. As the water conductivity rises above a set point, the controller will open a motorized ball valve on the discharge side of the condenser pump and dump water into the condenser drain until its conductivity is lowered. While the motorized ball valve is open, the controller will not disperse chemicals.

The chemicals are dispersed by the water treatment controller based on the scheduled input by a water treatment professional. The water meter measures the quantity of makeup water used by the condenser.

Any water treatment program must be compatible with stainless-steel, copper, aluminum, ABS plastic, and PVC. Batch feed processes must never be used, as concentrated chemicals can cause corrosion. Never use hydrochloric acid (muriatic acid) as it corrodes stainless-steel.

5.13.15. Evaporative Condenser Sequence of Operation

On a call for cooling, the condenser pump is activated. A pressure switch in the pump discharge is bypassed for six seconds by a time delay relay for the pump to establish recirculating water flow. If the flow is not proven within six seconds, the pressure switch opens, breaking the safety circuit, thereby shutting down the entire system. This pressure switch is set to close at 20.7 kpa (3 psi) and open at 6.9 kpa (1 psi).

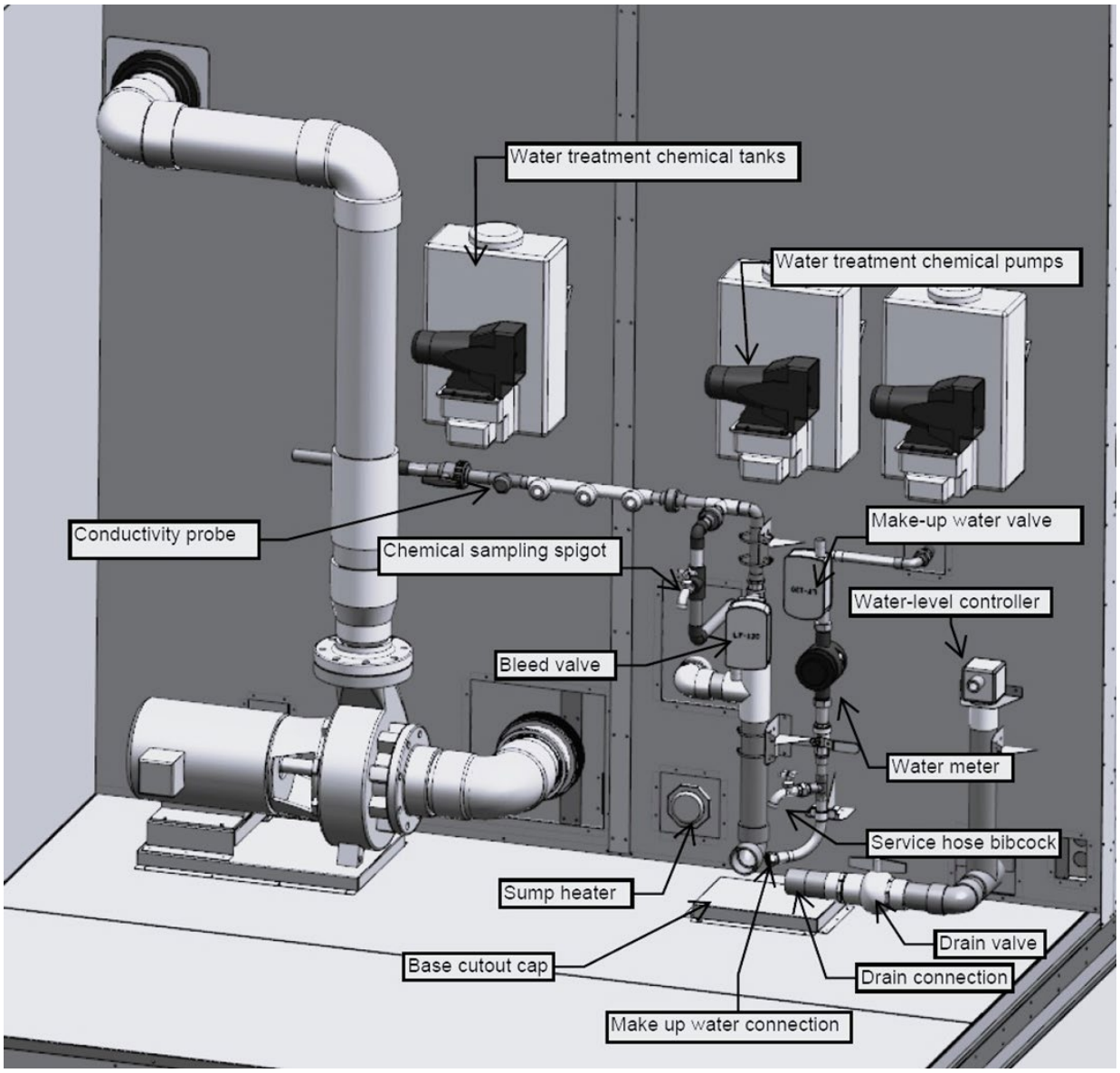

Figure 33: Evaporative Cooled Condenser

5.13.15.1. Evaporative Condenser Sequence of Operation (Continued)

A sensor measures the water temperature in the pump discharge line. If the sump water temperature exceeds 40.6°C (105°F), the cooling system will be shut down, thereby preventing damage to the evaporative condenser.

If a fault occurs in the evaporative condenser fan motor VFD, normally closed fault terminals on the VFD will interrupt the safety circuit, thereby shutting down the system.

The controls send a 0–10 VDC signal to the VFD based on the water temperature sensor. The controls are set to maintain a sump temperature of 21.1°C (70°F). The speed of the condenser fans increases in correlation with a rise in the sump temperature. Conversely, the speed of the condenser fans decreases if the sump temperature drops.

An outside air thermostat does not allow the condenser to operate when the ambient temperature is below 1.7°C (35°F).

5.13.15.2. Evaporative Condenser Maintenance

The following recommended maintenance procedures are basic requirements for normal operating environments. For severe operating conditions, the frequency of inspection and service must be increased. Air containing industrial and chemical fumes, salt, dust, or other airborne contaminants and particulates is absorbed by the recirculating water system and may form solutions and deposits harmful to the products and personnel.

5.13.16. Storage

Carefully prepare pumps that have been removed from service and stored to prevent excessive rusting. The pump port protection plates must not be removed until the pump is ready to connect to the piping. Rotate the shaft periodically (at least monthly) to keep the rotating element free and bearings fully functional.

For long-term storage, the pump must be placed vertically, in a dry environment. Internal rusting can be prevented by removing the plugs at the top and bottom of the casing and drain, or by air blowing out all of the water to prevent rust buildup or the possibility of freezing. Reinstall the plugs when the unit is made operational. Rust-proofing or packing the casing with moisture-absorbing material and covering the flanges is acceptable. When returning to service, remove the drying agent from the pump.

5.13.17. Pump Maintenance

Cleaning - Remove oil, dust, water, and chemicals from the exterior of the motor and pump. Keep the motor air inlet and outlet open. Blow out the interior of open motors with clean compressed air at low pressure.

Labeled Motors - It is imperative for the repair of a motor with an Underwriters' Laboratories label that original clearances be held, and that all plugs, screws, and other hardware be fastened securely. All replacement parts must be exact duplicates or approved equals. Violation of any of the above invalidates the Underwriters' Label.

5.13.18. Fan Motor Maintenance

Maintenance for the fan motor is the same as it is for the pump (section 5.6.17).

5.13.19. Access Doors

If scale deposits or water are found around the access doors, adjust the doors for tightness until leaking stops when the door is closed.

The evaporative condenser doors have an adjustable fit design. A good seal and fit are key to avoiding leaks. A leak inspection is recommended during installation and every six months thereafter. If a leak is found, use the following steps to adjust the fit of the door. This process will require at least two people.

1. Identify and locate the leak(s).
2. Ensure the evaporative condenser is not running before adjusting the access doors.
3. Open the door and check for damage to the seal or the frame, as well as the engagement of the door seal with the frame.
4. Replace the seal if damage is found.
5. Check if the seal replacement fixed the issue. If the issue persists, check the fit of the door.
6. Disengage the closing mechanism of the door that has a leak.
7. This is a two-person operation; one person must hold the door, while the other slowly loosens the four bolts on the two hinges connecting the door to the hinge.

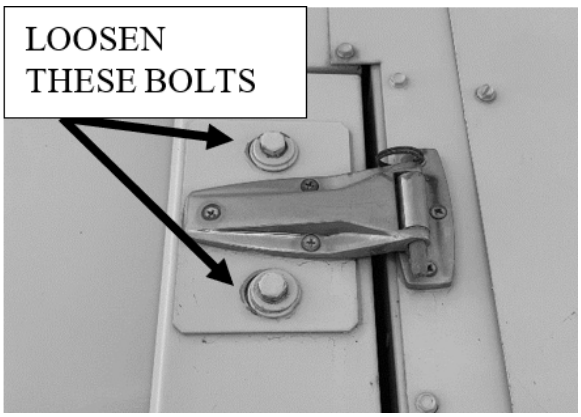

Figure 34: Evaporative Condenser Access Door

8. Adjust the door against the seal as needed to create a good seal all around the door.
9. Hold the door in place and tighten the bolts to secure the door in place.
10. Run the evaporative condenser and check to make sure the issue has been solved.
11. Repeat these steps as needed until the leak stops.

5.13.20. Bearings - Lubrication

Every six months, or after a prolonged shutdown, use a waterproof, lithium-based grease, such as the ones recommended below, to lubricate the bearings.

Below 0°C (32°F) - Esso Exxon or Beacon 325.
Above 0°C (32°F) - Mobil Mobilox EP2, Shell Alvania EP2 or Texaco RB2.

5.13.21. Recommended Monthly Inspection

1. Clean the sump section interior. Dirt and other impurities that have accumulated in the sump must be removed from the sump area.
2. Shut off the makeup water ball valve and open the drain connection to flush out the sump.
3. Clean any dirt out of the sump using a water hose (not a pressure washer).
4. Clean the sump suction strainer for any obstructions of the drainpipes.
5. Check the water operating level.
6. Inspect the fan motor(s) and water circulation pump(s) and lubricate per the nameplate's or manufacturer's recommendations.
7. Inspect the axial fans and eliminators and remove any debris that may have accumulated during operation.
8. Inspect the water distribution system to ensure that nozzles and spray orifices are functioning correctly. The inspection must be made with the circulation pump on and the fans off.
9. Inspect the sump for any signs of leaks.

5.13.22. Mist Eliminators

Ensure that the mist eliminators are correctly positioned after replacing them during cleaning or servicing the unit.

5.13.23. Air Inlet

Inspect the air inlet louvers and mist eliminators monthly to remove any paper, leaves, or other debris that may block the airflow into the condenser section.

5.13.24. Stainless-Steel Base Pan

The base pan under the tube bundles is made of stainless-steel and may become tarnished due to contamination. These surfaces must be inspected yearly to ensure they remain clear of any contamination that may result in damage. Any surfaces that show contamination must only be cleaned with a commercial stainless-steel cleaner to restore their initial appearance.

5.13.25. Propeller Fans and Motors

The fans are directly mounted on the motor shafts. The fans require minimal maintenance, apart from ensuring that they are clear of dirt or debris that would impede the airflow.

5.13.26. Recommended Annual Inspection

In addition to the above maintenance activities, a general inspection of the unit's surface must be completed at least once a year. Remove the spray header and flush out any unwanted debris.

5.13.27. Cleaning

Mechanical cleaning, including pressure washing, should never be performed, as it could damage the surfaces and seals. Chemical cleaning that is safe for stainless-steel, copper, aluminum, ABS plastic, and PVC is the only acceptable means of cleaning the evaporative condenser. A proper water treatment program should reduce the cleaning needs for the unit.

Do not attempt to mechanically clean the copper tubing in the evaporative condenser. Do not use wire brushes or any other mechanical device on the copper tubing. Severe damage may result. Contact your water treatment expert for recommendations on chemical cleaning procedures.

5.13.28. Warranties

Please refer to the limitations of warranties in effect at the time of the purchase.

Evaporative Condenser Water Quality:

The cycles of concentration (the ratio of dissolved solids in recirculated water to dissolved solids in makeup), must be determined and monitored frequently by a competent water treatment expert.

To limit the cycles of concentration to maintain the water quality, it is necessary to "bleed" a certain portion of the recirculated water. This is achieved automatically with a solenoid valve actuated by a conductivity meter set at the desired conductivity corresponding to the desired cycles of concentration. Consult a water treatment expert who has experience with evaporative condensers to determine the desired water quality.

All of AAON's evaporative condensers are furnished with a bleed system fitting and valve to continuously remove a small portion of the recirculated water to keep the water quality within the listed parameters. This device is located on the discharge side of the pump. Because the "bleed" rate is a function of the evaporation rate (i.e., amount of heat rejected), if the bleed setting is manual based on design heat load, too much water will be removed when the heat load is less than designed.

AAON's evaporative condenser is equipped with a desuperheater coil, located above the eliminators. Approximately 22% of the total heat of rejection is accomplished with the desuperheater. The water usage of the AAON evaporative condenser is approximately 22% less than an evaporative condenser not equipped with a desuperheater.

One method of calculating the evaporation and bleed of the unit in gallons per minute (gpm) is shown to the right.

Evaporation Rate

$$= \frac{\text{Total Heat of Rejection via Evaporation}}{h_{fg}\ {}^{btu}/_{lb} \times \rho\ {}^{lb}/_{gal} \times 60\ {}^{min}/_{hr}}$$

$$= \frac{\text{Total Heat of Rejection via Evaporation}}{525{,}000\ (\text{Btu/hr/gpm})}$$

Bleed Rate

$$= \frac{\text{Evaporation Rate}}{\text{Cycles of Concentration} - 1}$$

Example:
A unit has 100-ton cooling capacity with a compressor EER = 15

Total Heat of Rejection

$$= \text{Unit Capacity in Tons} \times 12000 \times \left(1 + \frac{3.413}{\text{EER}}\right)$$

$$= 100 \times 12000 \times \left(1 + \frac{3.413}{15}\right)$$

$$= 1{,}473{,}040\ \text{Btu/hr}$$

Total Full Load Heat of Rejection via Evaporation

= Total Heat of Rejection ×
(1 – fraction of heat rejected by desuperheater)
= 1,473,040 Btu/hr × (1 – 0.22)
= 1,148,971 Btu/hr

Note that approximately 22% of the total heat of rejection is accomplished with the desuperheater at full load. So, the fraction of heat rejected by the desuperheater (in the equation above) is approximately 0.22 at full load and increases as the ambient dry bulb decreases.

Evaporation Rate

$$= \frac{1{,}148{,}971\ (\text{Btu/hr})}{525{,}000\ (\text{Btu/hr/gpm})}$$

$$= 2.19\ \text{gpm}$$

Assuming 4 cycles of concentration:

Bleed Rate

$$= \frac{2.19}{4-1}$$

$$= 0.73\ \text{gpm}$$

5.13.29. Energy Recovery Units

RZ Series units can be selected with energy recovery wheels. AAON provides options for either an aluminum energy recovery wheel or a polymer energy recovery wheel. Follow the instructions for the specific type of energy recovery wheel for the unit.

WARNING

The improper installation, adjustment, alteration, service, or maintenance can cause property damage, personal injury, or loss of life. Startup and service must be performed by a Factory Trained Service Technician.

5.13.29.1. Initial Mechanical Check and Setup

Outdoor units equipped with outside air intake will have an outside air hood. The outside air hood must be opened prior to the unit's operation.

All outdoor air intake adjustments must be made according to the building's ventilation or local code requirements.

After the unit installation is complete, open the cassette access door and determine that the energy wheel rotates freely when turned by hand. Apply power and observe the wheel rotation. If the wheel does not rotate when power is applied, it may be necessary to readjust the "diameter air seals".

5.13.30. Airflow Balancing and Checking

High-performance systems commonly have complex air distribution and fan systems. Unqualified personnel must not attempt to adjust the fan operation or air circulation, as all systems have unique operation characteristics. Professional air balance specialists must be employed to establish actual operating conditions and to configure the air delivery system for optimal performance.

5.13.31. Controls

A variety of controls and electrical accessories may be provided with the equipment. Identify the controls on each unit by consulting the appropriate submittal of order documents, and operate according to the control manufacturer's instructions. If you cannot locate the installation, operation, or maintenance information for the specific controls, contact an AAON sales representative or the control manufacturer for assistance.

WARNING

Do not alter factory wiring. Deviation from the supplied wiring diagram voids all warranties and may result in equipment damage or personal injury. Contact the factory with wiring discrepancies.

5.13.32. Polymer Energy Recovery Wheel

This section is provided to ensure that the polymer energy recovery feature is properly set up to perform in accordance with the job specifications for your particular application.

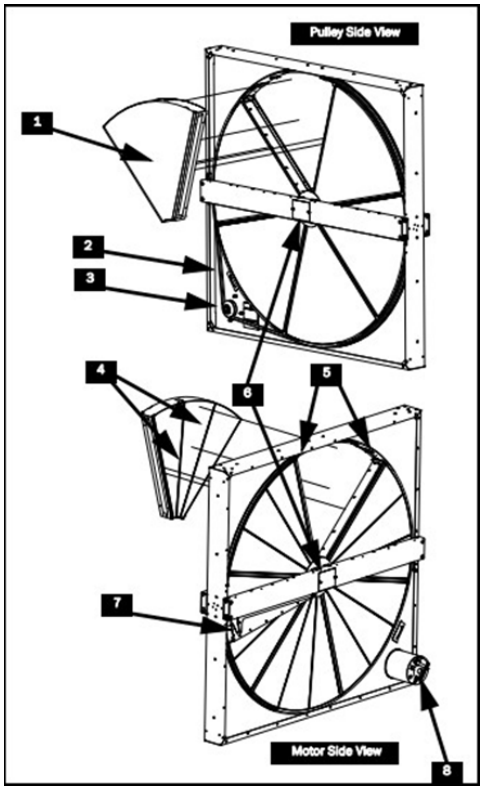

Figure 35: Polymer Energy Recovery Wheel

1. Removable Segment
2. Permanent Tension Belt
3. Pulley
4. Embedded Segment Stiffeners
5. Segment Retaining Latches
6. Bearing Beam and Bearing Access Cover Plate (Diameter Seals are behind the Bearing Beam on both sides)
7. Adjustable Purge
8. Motor

The Energy Recovery Cassette consists of a frame wheel, wheel drive system, and energy transfer segments. Segments are removable for cleaning or replacement. The segments rotate through the counter-flowing exhaust and outdoor air supply streams, where they transfer heat and/or water vapor from the warm, moist air stream to the cooler and/or drier air stream.

The initial setup and servicing of the energy recovery wheel is very important to maintain proper operation efficiency and building occupant comfort.

Normal maintenance requires a periodic inspection of the filters, the cassette wheel, drive belts, air seals, wheel drive motor, and its electrical connections.

Wiring diagrams are provided with each motor. When wired according to the wiring diagram, the motor rotates clockwise when viewed from the shaft/pulley side.

By carefully reviewing the information within this section and following the instructions, the risk of improper operation and/or component damage will be minimized.

It is important that periodic maintenance be performed to help ensure trouble-free operation.

5.13.33. Aluminum Energy Recovery Wheel

The aluminum energy recovery wheel is very similar to the polymer wheel; however, it is a monolith wheel without segments.

5.13.34. Wheel Set Purge Angle

When installed, the purge angle is factory set to five degrees. If a different angle is required, complete the following steps to adjust the purge:

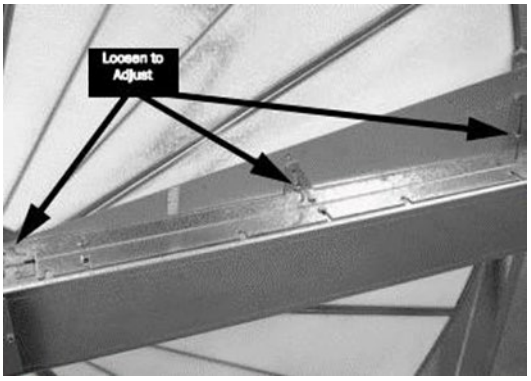

Figure 36: Wheel Adjusting Screws

1. Loosen the three adjusting screws for the purge.
2. Adjust the purge sector to the specified angle.

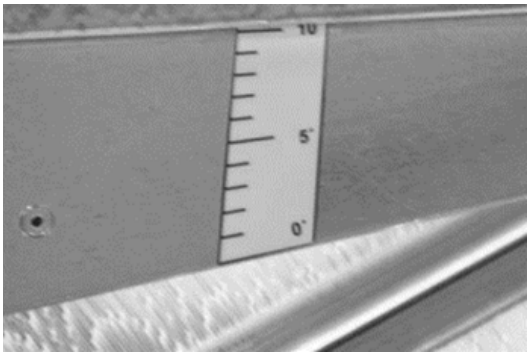

Figure 37: Purge Angle Gauge

3. Tighten the purge by adjusting screws.
4. Turn the wheel by hand clockwise (when viewed from the pulley side) to check for interference.

5.13.35. Wheel Check Purge Seal

If a purge is installed, check for a slight interference fit between the seal and the face of the wheel by sliding a piece of paper (in lieu of a feeler gauge) between the seal and the media in multiple locations along the purge seal as you rotate the wheel slowly by hand (clockwise when viewed from the pulley side). Verify that the media slightly grabs the paper during the rotation.

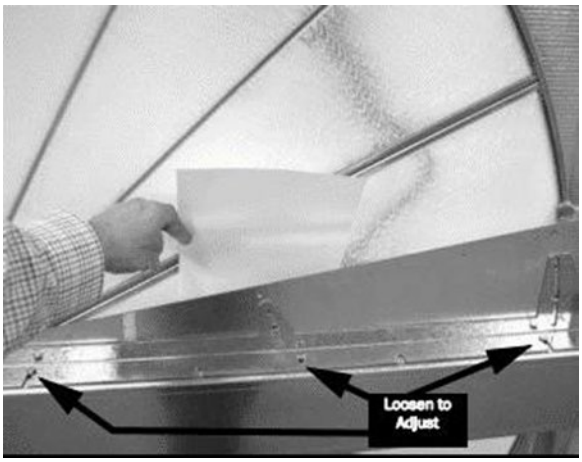

Figure 38: Wheel Adjusting Screws Can Be Used to Adjust the Purge Seal

If it is necessary to adjust a purge seal to the face of the wheel, loosen two or three screws along the bearing beam and adjust to the proper distance from the media surface. Tighten the screws and retest the seal.

5.13.36. Wheel Air Seal Adjustments

The Pile Type Air Seals across both sides of the energy wheel diameter are factory adjusted to provide close clearance between the air seal and the wheel. Racking the unit or cassette during installation, and/or mounting of the unit on a non-level support or in other than the factory orientation can change seal clearances. Tight seals prevent rotation.

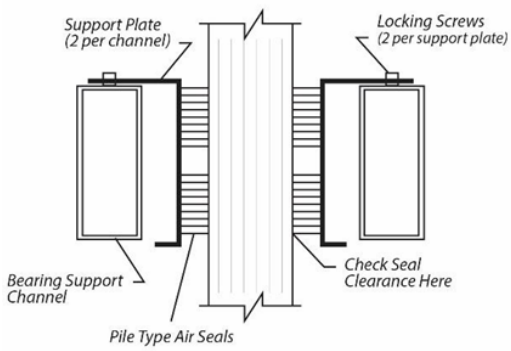

Figure 39: Cross Section of Air Seal Structure

5.13.37. Wheel to Air Seal Clearance

To check the wheel-to-seal clearance, first disconnect the power to the unit. In some units, the energy recovery wheel assembly can be pulled out from the cabinet to view the air seals. On larger units, the energy recovery wheel may be accessible inside the walk-in cabinet.

A business card or two pieces of paper can be used as a feeler gauge (typically each 0.1mm (.004 in.) thick) by placing it between the face of the wheel and pile seal.

Using the paper, determine if a loose slip fit exists between the pile seal and wheel when the wheel is rotated by hand.

To adjust the air seal clearance, loosen all of the seal plate retaining screws holding the separate seal retaining plates to the bearing support channels and slide the seal plates away from the wheel. Use the paper feeler gauge to readjust and retighten one seal plate at a time to provide a slip fit clearance when the wheel is rotated by hand.

Confirm that the wheel rotates freely. Apply the power to the unit and confirm the rotation. Visually inspect the belt and ensure that it is tracking near the center of the rim. Verify that the wheel speed is approximately 45-50 RPM. Confirm there is no excessive noise such as scraping, brushing, or banging.

5.13.38. Wheel Installation

Energy recovery cassettes are incorporated within the design of packaged units, packaged air handlers, and energy recovery ventilators. In each case, it is recommended that the following considerations be addressed:

5.13.39. Wheel Accessibility

The cassette and all its operative parts(i.e., the motor, belt, pulley, bearings, seals, and energy transfer segments), must be accessible for service and maintenance. This design requires that adequate clearance be provided outside the enclosure. Where cassettes are permanently installed in the cabinet, access to both sides of the cassette must be provided.

5.13.40. Wheel Orientation & Support

The Energy Recovery Cassette may be mounted in any orientation, as long as the cassette frame remains flat and the bearing beams are not racked.

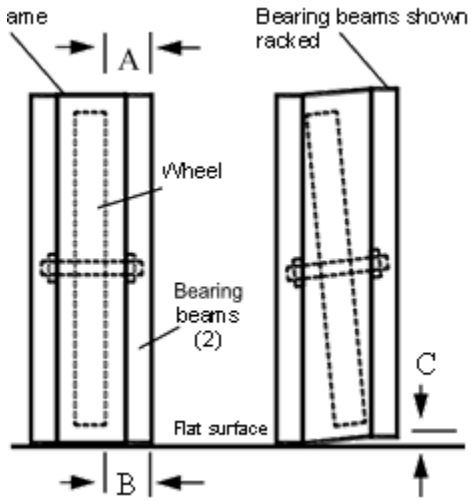

Figure 40: Avoid Racking of Cassette Frame

To verify, ensure that the distance between the wheel rim and bearing beam is the same at each end of the bearing beam, within 6.4 mm (1/4 of an inch) (dimensions A & B). This amount of racking can be compensated for by adjusting the diameter seals.

If the distance is greater than 6.4 mm (1/4 of an inch) (dimension C), the racking must be corrected to ensure that the drive belt will not disengage from the wheel.

5.13.40.1. Wheel Startup Procedure

CAUTION

Keep your hands away from the rotating wheel! Contact with the rotating wheel can cause physical injury.

1. Turn the wheel clockwise, by hand, (as viewed from the pulley side), to verify that the wheel turns freely through 360° rotation.
2. Before applying power to the drive motor, confirm that the wheel segments are fully engaged in the wheel frame, and that the segment retainers are completely fastened. (See the Segment Installation Diagram).
3. Keep hands and objects away from moving parts, activate the unit, and confirm wheel rotation. The wheel rotates in a clockwise direction.
4. If the wheel has difficulty starting, turn the power off and inspect the wheel for excessive interference between the surface and each of the four (4) diameter seals. To correct, loosen the diameter seal by adjusting the screws and the back of the adjustable diameter seals away from the surface of the wheel. Then, apply power to confirm that the wheel is free to rotate, and readjust and tighten the hub and diameter seals, as shown in the Hub Seal Adjustment diagram.
5. Start and stop the wheel several times to confirm the seal's adjustment and that the belt is tracking properly on the wheel rim (approximately ¼ inch from the outer edge of the rim).

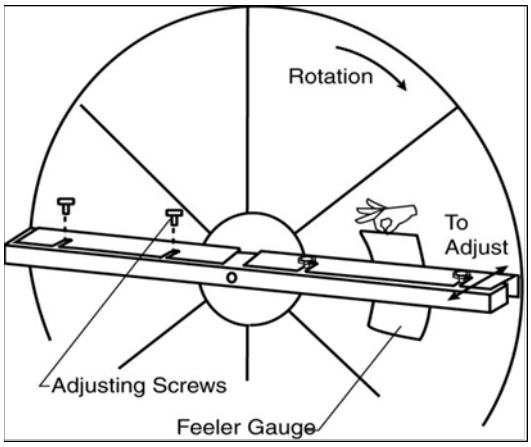

Figure 41: Diameter Seal Adjustment

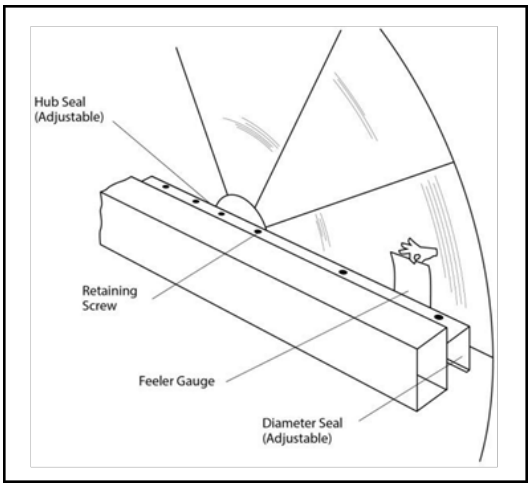

Figure 42: Hub Seal Adjustment

5.13.40.2. Wheel Routine Maintenance and Handling

Handle cassettes with care. Lift all cassettes by the bearing on the support beam. Holes are provided on both sides of the bearing support beams to facilitate rigging, as shown in the following illustration:

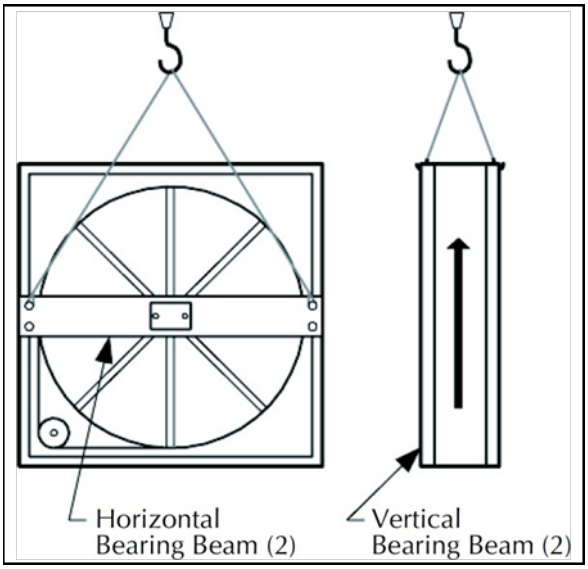

Figure 43: Lifting Hole Locations

Routine maintenance of the Energy Recovery Cassettes includes periodically cleaning the Energy Recovery Wheel as well as inspecting the Air Seals and Wheel Drive Components as follows:

5.13.40.2.1. Wheel Air Seals

Four adjustable diameter seals are provided on each cassette to minimize the transfer of air between the counter-flowing airstreams.

To adjust the diameter seals, loosen the diameter seal adjusting screws and the back seals away from the surface of the wheel. Rotate the wheel clockwise until two opposing spokes are hidden behind the bearing support beam. Use a folded piece of paper as a feeler gauge and position the paper between the surface of the wheel and the diameter seals.

Adjust the seals towards the wheel surface until slight friction on the feeler gauge (paper) is detected when the gauge is moved along the length of the spoke. Retighten the adjusting screws and recheck the clearance with a feeler gauge.

5.13.40.2.2. Wheel Drive Components

The wheel drive motor bearings are pre-lubricated, and no further lubrication is necessary.

The wheel drive pulley is secured to the drive motor shaft by a combination of either a key or a D slot and a set screw.

The set screw is secured with a removable Loctite to prevent loosening. Inspect the set screw annually to ensure that it is secure. The wheel drive belt is a urethane stretch belt designed to provide constant tension throughout its lifespan. No adjustment is required. Inspect the drive belt annually for proper tracking and tension. A properly tensioned belt turns the wheel immediately after power is applied with no visible slippage during startup.

5.13.40.2.3. Wheel Service

CAUTION

Disconnect the electrical power before servicing the energy recovery cassette. Keep all hands away from the bearing support beam when installing or removing segments. Failure to do so could result in severe injury to the fingers or hands.

5.13.40.2.3.1. Polymer Wheel Segment Installation & Replacement

An uneven number of segments in the wheel causes the wheel to accelerate in rotation. Install or remove opposing segments to minimize wheel imbalance and unwanted rotation during service, and ensure even weight distribution. Failure to maintain control of the wheel rotation while removing or installing the segments could cause severe injury to fingers or hands. Always close and secure the segment retaining latches before rotating the wheel.

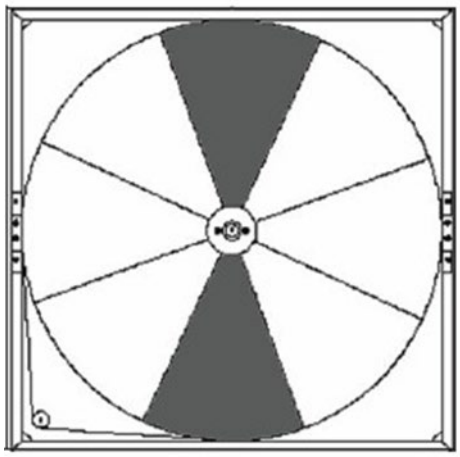

Figure 44: Polymer Wheel Segment Removal Pattern

Wheel segments are secured to the wheel frame by a Segment Retainer, which pivots on the wheel rim, and are held in place by Segment Retaining Latches.

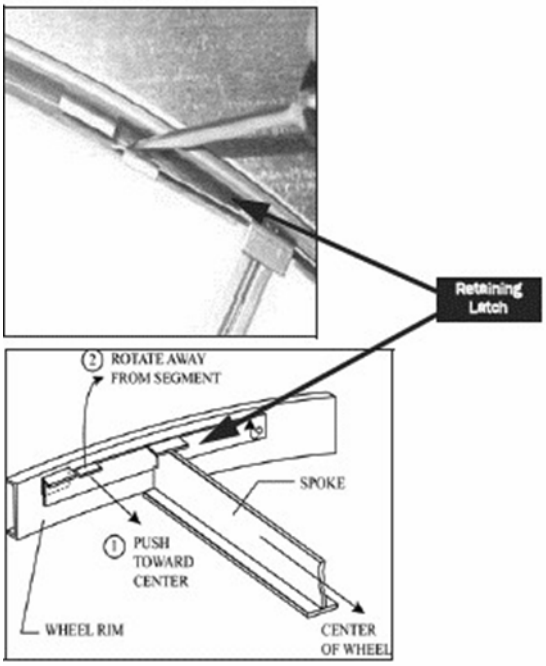

Figure 45: Segment Retainer

To install the wheel segments, follow the steps below. (Reverse this procedure to remove the segments.)

1. Disconnect the power from the wheel.
2. Gain access to the wheel and slide the wheel frame out of the cabinet.
3. Unlock two segment retainers (one on each side of the selected segment opening.
4. With the embedded stiffener facing the motor side, insert the nose of the segment between the hub plates.

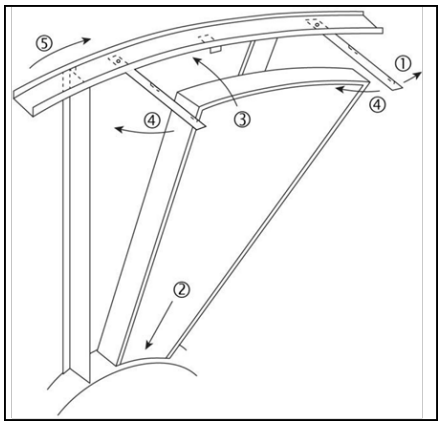

Figure 46: Segment Installation

5. Hold the segment by the two outer corners, and press the segment towards the center of the wheel and inwards against the spoke flanges. If hand pressure does not fully seat the segment, insert the flat tip of a screwdriver between the wheel rim and outer corners of the segment and apply downward force while guiding the segment into place.
6. Close and latch each Segment Retainer under the Segment Retaining Catch.
7. Slowly rotate the wheel 180°. Install the second segment opposite the first as a counterbalance. Rotate the two installed segments 90° to balance the wheel while the third segment is installed. Rotate the wheel 180° again to install the fourth segment opposite the third. Repeat this sequence with the remaining four segments.

5.13.40.2.3.2. Wheel Drive Motor and Pulley Replacement

1. Disconnect the power to the wheel drive motor.
2. Remove the belt from the pulley and temporarily position the belt around the rim of the wheel.
3. Loosen the set screw in the wheel drive pulley using a hex head wrench and remove the pulley from the motor drive shaft.
4. While supporting the weight of the drive motor in one hand, loosen and remove the four mounting bolts.
5. Install the replacement motor with the AAON-supplied hardware kit.
6. Install a pulley to the dimensions as shown, and secure the set screw to the drive shaft.
7. Stretch the belt over the pulley and engage in groove.
8. Follow the start-up procedure.

5.13.40.2.3.3. Wheel Belt Replacement

1. Obtain access to the pulley side bearing the access plate if bearing access plates are provided. Remove the bearing access plates and retaining screws.
2. Use a hexagonal wrench to loosen the set screw in the bearing locking collar. Use a light hammer and drift (in the drift pin hole) to tap the collar in the direction of wheel rotation to unlock the collar and remove the collar.
3. Use a socket wrench with an extension to remove the two nuts that secure the bearing housing to the bearing support beam. Slide the bearing from the shaft. Use a bearing puller if the bearing is not removable by hand.
4. Form a small loop of the belt and pass it through the hole in the bearing support beam. Grasp the belt at the wheel hub and pull the entire belt down.

Note: Slight hand pressure against the wheel rim will lift the weight of the wheel from the inner race of the bearing to assist in the removal and installation of the bearing.

CAUTION

Protect hands and belt from possible sharp edges of the hole in the Bearing Support Beam.

5. Loop the trailing end of the belt over the shaft (the belt should be partially through the opening).
6. Reinstall the bearing onto the wheel shaft, being careful to engage the two locating pins into the holes in the bearing support beam. Secure the bearing with two self-locking nuts.
7. Install the belt around the wheel and pulley according to the instructions provided with the belt.
8. Reinstall the diameter seals or hub seal and tighten the retaining screws. Rotate the wheel in a clockwise direction to determine that the wheel rotates freely with slight drag on the seals.
9. Reinstall the bearing locking collar. Rotate the collar by hand in the direction the wheel rotates (see label provided on each cassette for wheel rotation).
10. Lock the wheel into position by tapping the drift pin hole with a hammer and drift. Tighten the set screw to secure the wheel into position.
11. Reinstall the Bearing Access Cover.
12. Apply power to the wheel and ensure that the wheel rotates freely without interference.

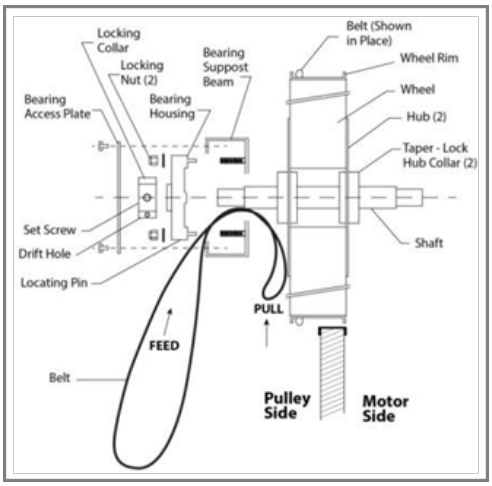

Figure 47: Belt Replacement

5.13.41. Energy Recovery Wheel General Cleaning

Routine maintenance of the Energy Recovery Wheel includes the periodic cleaning of the Energy Recovery Wheel as well as the inspection of the Air Seals and Wheel Drive Components. Cleaning the energy transfer media will help maintain optimal performance. The frequency of cleaning is largely dependent on the application and air quality. Use ASHRAE's Classes of Air categories to create a routine cleaning schedule.

Class 1 air has low contaminant concentration with an inoffensive odor and sensory irritation intensity.

Class 2 air has a moderate contaminant concentration, with mildly offensive odors or sensory-irritation intensity.

Class 3 air has a significant contaminant concentration and significant offensive odor or sensory-irritation intensity.

Class 4 air has highly objectionable fumes or gases and potentially contains dangerous particles, bio-aerosols, or gases at a concentration high enough to be considered harmful, not suitable for recirculation, or transfer to any other space.

Table 25: Energy Recovery Wheel Cleaning Frequency

Class of Air	Examples	Cleaning Frequency
Class 1 Clean Air	• Offices • Classrooms • Assembly rooms • Churches	Every 8-10 years
Class 2 Moderately Clean Air	• Restrooms • Swimming pools • Dining rooms • Locker rooms • Warehouse • Dorms	Every 4-6 years
Class 3 Dirty Air	• Kitchens • Dry cleaners • Beauty salons • Laboratories • Pet shops	Every 1-2 years
Class 4 Contaminated Air	• Paint spray booths • Laboratory fume exhaust • Kitchen grease exhaust	Do not use in this application

5.13.42. Energy Recovery Wheel General Cleaning (Continued)

CAUTION

Disconnect electrical power before servicing the energy recovery cassette. Always keep hands away from the bearing support beam when installing or removing segments. Failure to do so could result in severe injury to fingers or hands.

The need for periodic cleaning of the energy recovery wheel will vary depending on the operating schedule, climate, the types of contaminants in the indoor air being exhausted, and the outdoor air being supplied to the building.

The energy recovery wheel is "self-cleaning" with respect to dry particles due to its laminar flow characteristics. Smaller particles pass through, while larger particles land on the surface and are blown clear as the flow direction is reversed. Any material that builds up on the face of the wheel can be removed with a brush or vacuum. The primary need for cleaning is to remove any oil-based aerosols that have condensed on energy transfer surfaces. A characteristic of all dry desiccants, such films can close off micron sized pores at the surface of the desiccant material, reducing the efficiency by which the desiccant can adsorb and desorb moisture, and build up, leading to reduced airflow.

In a reasonably clean indoor environment, such as a school or office building, measurable reductions of airflow or loss of sensible (temperature) effectiveness may not occur for several years. Measurable changes in latent energy (water vapor) transfer can occur in shorter periods of time in applications such as moderate occupant smoking or cooking facilities. In applications experiencing unusually high levels of occupant smoking or oil-based aerosols, such as industrial applications involving the ventilation of machine shop areas, for example, the annual washing of energy transfer may be necessary to maintain latent transfer efficiency. Proper cleaning of the energy recovery wheel will restore the latent effectiveness to near-original performance.

5.13.43. Aluminum Wheel Cleaning

See the general energy recovering cleaning section for how often to clean the wheel.

To clean the wheel, gain access to the aluminum energy recovery wheel, then use the following methods:

1. Use a brush or vacuum cleaner to remove small foreign materials.
2. Use compressed air at a distance of at least 2 ft from the wheel. Too much pressure can easily damage the aluminum media.
3. Remove the energy recovery wheel from the unit.
4. Tightly cover all electric parts and bearings before using pressurized water.
5. Use the pressurized water at a distance of at least 2 ft from the wheel. Do not use detergents. Keep temperature below 77°F.
6. Remove excess water before reinstalling the wheel.

5.13.44. Polymer Wheel Cleaning

To clean, gain access to the energy recovery wheel and remove the segments. Brush foreign material away from the face of the wheel. Wash the segments or small wheels in a 5% solution of non-acid-based coil cleaner or alkaline detergent and warm water.

CAUTION

Do not use acid-based cleaners, aromatic solvents, steam, or temperatures above 76.7°C (170°F), or damage to the wheel may occur.

Soak the segments in the solution until the grease and tar deposits loosen.

Note: Some staining of the desiccant may remain, and is not harmful to performance.

Before removing, rapidly run a finger across the surface of the segments to separate the polymer strips for a more thorough cleaning. Rinse the dirty solution from the segments and remove any excess water before reinstalling them into the wheel.

5.13.45. Gas or Electric Heating

The unit is designed to heat a given airflow. If this amount of air is greatly reduced, approximately 1/3 during the heating season, the gas heat exchanger or electric heating coil may overheat and turn the burner, or heater, off entirely by action of the safety high temperature limit devices, which are factory mounted at the heat exchanger and supply blower areas.

Adjust the airflow after installation to obtain an air temperature rise within the range specified on the unit rating plate at the required external static pressure.

Should overheating occur with a gas heat exchanger, or the gas supply fail to shut off, shut off the manual gas valve to the furnace before shutting off the electrical supply.

Prolonged overheating of the heat exchanger will shorten its life.

If the unit has not been selected as a 100% outside air unit (makeup air unit), the return air duct must be sealed to the unit, and the return air temperature must be maintained between 12.8°C (55°F) and 26.7°C (80°F).

Table 26: RZ 45–140-ton Electric Heating Capacities

Model Option B3	Electric Heat Capacity	
	kW (208V)	kW (230V, 380V 460V, 575V)
1 = *Heat 1*	60.1	80
2 = *Heat 2*	90.1	120
3 = *Heat 3*	120.1	160
4 = *Heat 4*	150.2	200
5 = *Heat 5*	180.2	240

Table 27: RZ 145–240-ton Electric Heating Capacities

Model Option B3	Electric Heat Capacity	
	kW (208V)	kW (230V, 380V, 460 V, 575V)
1 = *Heat 1*	60.1	80
2 = *Heat 2*	90.1	120
3 = *Heat 3*	120.1	160
4 = *Heat 4*	180.2	240

Table 28: RZ 45–140-ton Gas Heating Capacities

Model Option B3	Gas Heat Capacity	
	Input (MBH)	Output (MBH)
1 = Heat 1	540	437
2 = Heat 2	810	656
3 = Heat 3	1080	875
4 = Heat 4	1350	1094
5 = Heat 5	1620	1312
6 = Heat 6	2100	1701
7 = Heat 7	2580	2090
8 = Heat 8	3060	2479

Table 29: RZ 145–240-ton Gas Heating

Model Option B3	Gas Heat Capacity	
	Input (MBH)	Output (MBH)
1 = Heat 1	800	648
2 = Heat 2	1200	972
3 = Heat 3	1600	1296
4 = Heat 4	2000	1620
5 = Heat 5	2400	1944
6 = Heat 6	3100	2511
7 = Heat 7	3800	3078
8 = Heat 8	4500	3645

5.13.46. Gas Heating

WARNING

For Your Safety:
Read the entire gas heating installation section of this manual before beginning installation of the gas heating system.

If these instructions are not followed exactly, a fire or explosion may result, causing property damage, personal injury, or loss of life.

Verify that the unit nameplate aligns with the proper gas supply type and amount.

Table 30: Min. and Max Inlet Gas Pressures (Metric)

Min and Max Inlet Gas Pressure (in H_2O)		
Gas Type	Min Pressure	Max Pressure
Natural Gas	6	10.5
Propane	11	13

Table 31: Min. and Max Gas Pressures (Imperial)

Min and Max Inlet Gas Pressure (mmHg)		
Gas Type	Min Pressure	Max Pressure
Natural Gas	11.2	19.6
Propane	20.6	24.3

A field provided 3.2mm (1/8 inch) NPT pressure tap is required to be installed in the piping just upstream of the shutoff valve for test gage connection to allow checking of the gas supply pressure at the unit.

A factory-installed pressure tap on the outlet end of the gas valve can be used to verify a manifold pressure of 6.5 mmHg (3.5 in. w.c.) for natural gas, or 19.6 mmHg (10.5 in. w.c.) for propane.

Gas piping shall be installed in accordance with local codes, or in the absence of local codes, installation shall conform to the current (United States) National Fuel Gas Code ANSI-Z223.1/NFPA 54 or the current (Canada) National Fuel & Propane Installation Code CSA B149.1 or B149.2.

After verifying the gas inlet pressure and manifold pressure, the service technician times the gas flow rate through the gas meter with a stopwatch to verify the gas input rate.

The unit's nameplate input rate value is calculated based on the altitude where the unit is shipped. Units installed at an elevation less than 610 meters (2000 feet) above sea level require no derating. At 610 meters (2000 feet) above sea level, a 4% derate adjustment must be applied to the standard input rate. For every additional 305 meters (1000 feet), there is an additional 4% derate adjustment. For example, at 914 meters (3000 feet) above sea level, the derate adjustment for elevation would be 8%, resulting in a new heat exchanger rate of 92% of the standard input rate listed.

Table 32: RZ 45-140-tons Unit Gas Piping Connections

RZ Small Gas Input (MBH)	Connections	
	Quantity	Size
540	1	2" (51 mm)
810	1	
1080	1	
1350	1	
1620	1	
2100	1	3" (76 mm)
2580	1	
3060	1	

Table 33: RZ 145-240-ton Unit Gas Piping Connections

RZ Medium Gas Input (MBH)	Connections	
	Quantity	Size
800	1	2-1/2" (63.5 mm)
1200	1	
1600	1	
2000	1	
2400	1	
3100	1	3" (76 mm)
3800	1	
4500	1	

Note: See the unit Nameplate for unit gas heating capacities or the Unit Rating Sheet, which can be obtained from the AAON Sales Representative.

Table 34: (Metric) Natural Gas Maximum Piping Capacities (m^3/hr) - Specific Gravity = 0.6, Supply Pressure ≤3.5 kPa, Pressure Drop = 0.93 mmHg

Pipe Size (mm)	Length of Pipe				
	6.1 m	15.2 m	30.4 m	45.6 m	60.8 m
31.75	26.9	16.4	11.3	9.2	7.9
38.10	41.3	25.5	17.6	14.2	12.2
50.80	77.9	47.6	32.6	26.9	22.7
63.50	123.2	75.0	52.4	42.5	36.2
76.20	220.3	134.2	92.3	73.9	63.4
101.60	450.2	273.5	188.0	150.9	129.1

Table 35: (Imperial) Natural Gas Maximum Piping Capacities (ft^3/hr) - Specific Gravity = 0.6, Supply Pressure ≤0.5 psi, Pressure Drop = 0.5" w.c.

Pipe Size	Length of Pipe				
	20 ft	50 ft.	100 ft.	150 ft.	200 ft.
1-1/4"	950	580	400	325	280
1-1/2"	1460	900	620	500	430
2"	2750	1680	1150	950	800
2-1/2"	4350	2650	1850	1500	1280
3"	7780	4740	3260	2610	2240
4"	15900	9660	6640	5330	4560

Table 36: (Metric) Propane (kW) Maximum Piping Capacities Specific Gravity = 1.52, Supply Pressure = 2.34 kPa, Pressure Drop, 0.93 mmHg

Pipe Size (mm)	Length of Pipe				
	6.1 m	15.2 m	30.4 m	45.6 m	60.8 m
31.75	438.1	266.7	184.6	149.5	127.5
38.10	672.6	414.7	285.7	230.1	194.9
50.80	1269.0	775.2	530.5	438.1	375.1
63.50	2064.7	1271.9	876.3	706.3	609.6
76.20	3666.3	2258.1	1554.7	1254.3	1059.5
101.60	7479.2	4610.0	3174.0	2560.0	2162.9

Table 37: (Imperial) Propane (kBtu/hr) Maximum Piping Capacities Specific gravity = 1.52, Supply Pressure = 0.34 psi, Pressure Drop, 0.5" w.c.

Pipe Size (mm)	Length of Pipe				
	6.1 m	15.2 m	30.4 m	45.6 m	60.8 m
31.75	438.1	266.7	184.6	149.5	127.5
38.10	672.6	414.7	285.7	230.1	194.9
50.80	1269.0	775.2	530.5	438.1	375.1
63.50	2064.7	1271.9	876.3	706.3	609.6
76.20	3666.3	2258.1	1554.7	1254.3	1059.5
101.60	7479.2	4610.0	3174.0	2560.0	2162.9

CAUTION

The heater must be disconnected from the gas supply piping while pressure testing the supply piping system with pressures greater than 3.45 kpa (½ psi). Gas valves can be damaged if subjected to more than 3.45 kpa (½ psi).

Do not use gas piping smaller than the unit gas connections. Natural gas pipes that run longer than 6.1 meters (20 feet) and propane gas pipes that run longer than 15.2 meters (50 feet) may require a larger supply pipe than the unit connection size. Some utility companies may also require pipe sizes larger than the minimum sizes listed.

5.13.46.1. Piping Sizing Example (Imperial units)

A 100 ft pipe run is needed for a 1710 MBH natural gas heater. The natural gas has a rating of 1000 BTU/ft^3 and a specific gravity of 0.6 (Obtain these values from the local gas supplier.)

$$1710\ MBH \times \frac{ft^3}{1000\,BTU} = 1710\ \text{ft}^3/\text{hr}$$

From Table 34 at 100 ft and 1710 ft^3/hr, the required minimum pipe size is 2-1/2 inch.

A 100 ft pipe run is needed for an 800 MBH propane gas heater. 800 MBH = 800 kBtu/hr, at 100 ft, and 800 kBtu/hr makes the required minimum pipe size 1-1/2 inch.

5.13.46.2. Gas Pressure Regulator & Overpressure Protection Device

A gas pressure regulator should be installed if the natural gas supply pressure to the unit is greater than 10.5 inch w.c., but less than 2 psi (55.4 inch w.c.), and if propane gas supply pressure is greater than 13 inch w.c., but less than 2 psi (55.4 inch w.c.). Regulators must comply with the latest edition of the Standard for Line Pressure Regulators, ANSI Z21.80/CSA 6.22.Both a gas pressure regulator and an overpressure protection device (OPD) should be installed if the gas supply pressure to the unit is greater than 2 psi (55.4 inch w.c.) and less than 5 psi (138.4 inch w.c.), in compliance with ANSI Z21.80/CSA 6.22. For proper heater operation, pressure to the regulator should not exceed 5 psi (138.4 inch w.c.).

5.13.46.3. Piping Supports

Gas supply piping should be supported directly at the connection to the unit and at intervals listed in the following table with metal straps, blocks, or hooks. The piping must not be strained or bent for optimal operation.

Table 38: Piping Support Intervals (Metric)

Pipe Size (mm)	Support Intervals
12.7 to 19.1	Every 1.8 m
19.1 to 25.4	Every 2.4 m
44.5 or Larger (Horizontal)	Every 3 m
31.8 or Larger	Every Floor

Table 39: Piping Support Intervals (Imperial)

Pipe Size	Support Intervals
1/2" to 3/4"	Every 6 ft
3/4" to 1"	Every 8 ft
1-3/4" or Larger (Horizontal)	Every 10 ft
1-1/4" or Larger (Vertical)	Every Floor

5.13.46.4. Additional Gas Piping Considerations

Local codes typically require a field provided and installed manual main shutoff valve and union external from the unit. The main shutoff valve is labeled. A field provided 1/8 inch NPT pressure tap is required to be installed in the piping upstream of the shutoff valve to test the gauge connection that allows the checking of the gas supply pressure of the unit. A drip leg should be installed near the unit connection to trap sediment and condensate. Pipe joint compounds used on all gas piping connections are resistant to liquid petroleum gases. However, if flexible gas piping is used to the unit or in the unit, they must be replaced, and the connectors cannot be reused.

Heat exchangers are equipped with a condensate drain, which should be plumbed to the appropriate drain according to the (United States) National Fuel Gas Code ANSI-Z223.1/NFPA 54 or the current (Canada) National Fuel & Propane Installation Code CSA B149.1 or B149.2, the International Building Code, and any applicable local and regional codes and regulations.

The condensate drain connection is located next to the gas entry location. Each gas heater has a silicone condensate drain connected to it. The drains on each side of the unit run into a common drain line, which exits the unit near the bottom of the heat access doors.

AAON gas-fired heat exchangers are designed to be non-condensing. These heat exchangers are mounted downstream of the cooling coils. During the cooling season, the ambient air inside the heat exchanger tubes can condense due to cold air being blown over the outside of the tubes. The amount of condensation will vary depending on the ambient air temperature and humidity, as well as the air temperature over the tubes. This condensation can be drained onto the roof or into any waste drain.

Typically, during the heating season, the heat exchanger will not make any condensation. However, short cycling the heater can prevent the flue gases from reaching temperatures above the dew point (about 54.4°C [130^{0}F]), which can cause condensation in the heat exchanger.

Staged or modulated heat exchangers may produce condensate depending on the firing rate, ambient air temperature, and humidity, as well as the percentage and temperature of outside air being introduced to the unit. This condensate is generally between a 2.9 and 4 pH level.

Condensation made in the heat exchanger during the heating mode may need to be managed and not just drained onto the roof, depending on national and local code requirements and the application of the final user. This condensate can stain the roof and can cause rust in some cases on metal roofs. The end user or contractor is responsible for determining if the condensate will damage the roofing material.

Ambient air temperatures below freezing during the heating mode can freeze any condensation made in the drain lines. Smaller amounts of condensation may not cause any issues, but for larger amounts of condensate and low ambient air temperatures (below freezing temperatures for multiple consecutive days), this means that the internal and external drain lines must be heat traced to prevent freezing. Heat-traced internal drain lines are required and are a factory-provided standard feature on the condensate drain with the high turndown modulating gas option.

A condensate neutralizer vessel and connecting tubing can be added to the equipment if required. For below-freezing ambient temperature applications, the neutralizer, connecting tubing, and drain lines require heat tracing to prevent the condensate from freezing. These components are the responsibility of the installer.

DANGER

Do not use an open flame or other source of ignition for leak testing. Fire or explosion could result, causing property damage, personal injury, or death.

DANGER

Leak Check Gas Pipe:
The gas pipe in the unit shall be checked for leaks before operation and startup. Unit must not be placed in operation until a leak check has been conducted for all gas piping connections. All connections should be annually checked for leaks after installation. Gas leaks could result in fire, explosion, or other hazardous situations.

CAUTION

Some soaps used for leak detection can be corrosive to certain metals. Rinse the piping thoroughly after a leak test has been completed.

Leak Testing

All components of gas supply systems, including the manual shut-off valves and the piping in the interior of the unit, should be leak tested with a soap solution before operating the appliance, and at least on an annual basis thereafter.

All gas-fired heat exchangers are tested at the factory before shipment. The testing removes most of the oils that have been used in the manufacturing process. However, trace amounts may remain. When performing the initial startup at the jobsite, people or any other living animals that may be sensitive to the residual odors or gases should not be present in the conditioned space during the startup. In all cases, including the initial factory firing and testing, any of the gases will be under the acceptable level of concentration for human occupancy.

The installation of the gas heaters is adjusted to obtain an air temperature rise within the range specified on the rating plate.

5.13.46.5. Gas Heater Operating Instructions

This appliance does not have a pilot. It is equipped with an ignition device that automatically lights the burner. Do NOT try to light the burner by hand.

Before operating, smell all around the appliance area for gas. Be sure to smell next to the floor because some gases are heavier than air and will settle on the floor.

What To Do If You Smell Gas

- Do not try to light the appliance.
- Do not touch any electric switch; do not use any phone in the building.
- Immediately call your gas supplier from a neighbor's phone. Follow the gas supplier's instructions.
- If you cannot reach your gas supplier, call the fire department.

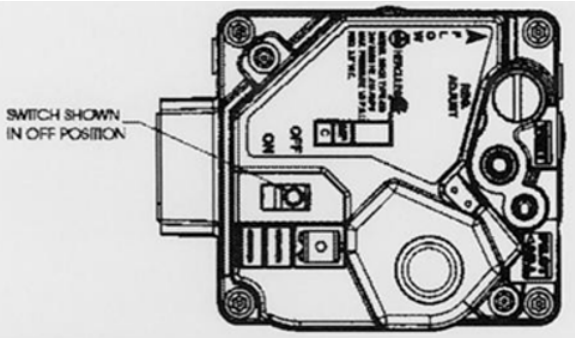

Figure 48: Switch in the Off Position

Only use your hand to move the on/off switch.

Do not use this appliance if any part has been underwater. Immediately call a qualified service technician to inspect the appliance and to replace any part of the control system and any gas control that has been underwater.

Operating Instructions

1. Set the thermostat to the lowest setting.
2. Turn off all electric power to the appliance.
3. This appliance is equipped with an ignition device that automatically lights the burner. Do not try to light the burner by hand.
4. Remove the control access panel.
5. Move the on/off switch to the "OFF" position.
6. Wait five minutes to clear out any gas. If you then smell gas, STOP! Follow the procedure listed in the "What to Do if You Smell Gas" section to the left. If you do not smell gas, proceed to the next step.
7. Move the on/off switch to the "ON" position.
8. Replace the control access panel.
9. Turn on all electric power to the appliance.
10. Set the thermostat to the desired setting.
11. If the appliance will not operate, follow the instructions below and call your service technician or gas supplier.

To Turn Off the Gas to the Appliance

1. Set the thermostat to the lowest setting.
2. Turn off all electric power to the appliance if service is to be performed.
3. Remove the control access panel.
4. Move the on/off switch to the "OFF" position.
5. Replace the control access panel.

5.13.46.6. Gas Heating Maintenance

WARNING

Once a year, before the unit is in operation for the heating season, a qualified service technician shall inspect all flue product carrying areas of the furnace and main burners for continued safe operation.

DANGER

Leak Check Gas Pipe:
The gas pipe in the unit should be checked for leaks before operation and startup. The unit must not be placed in operation until a leak check has been conducted for all gas piping connections. All connections must be checked for leaks annually after installation. Gas leaks could result in fire, explosion, or other hazardous situations.

Ensure that all gas supply lines are purged of air before turning on the electrical power switch. Set the gas valve to the on position (see startup instructions).

Turn the main electrical power on and set the controls to the heating mode of operation. This will enable the combustion ventilation motor. The controls will also automatically supply power to the igniter and the gas valve after the heating call is made.

The flame-sensing probe detects the presence of the flame. Should no flame be detected in 10 seconds, the ignition system will recycle. If no flame is detected after three tries, the ignition system will lockout.

After the ignition system lockout, remove the call for heating. The main gas valves should be extinguished.

The supply fans are controlled by the ignition system. In the fan "Auto" mode, the fans come on 45 seconds after the flame is proven and go off 120 seconds after the cooling call is removed.

The furnace combustion ventilation air and flue openings shall be checked annually for debris and obstructions. If the vent extensions are used, they must meet category III requirements.

This appliance contains a wire screen at the vent outlet. Each heating season, prior to placing the appliance in heat mode, check that no debris or foreign matter has accumulated in the vent outlet. It is also recommended to check for debris each time the air filters are changed.

In the event that the vent outlet becomes blocked, do not attempt to start the appliance in heat mode until the entire vent opening is cleared.

If the unit shuts down because a vent was blocked, a qualified technician or service agency must monitor the unit prior to restarting.

The gas burner and heat exchanger should never require cleaning. If cleaning is necessary, this is an indication of faulty operation of the unit. Cleaning must only be done by a qualified service agency and only after consultation with an AAON service representative.

If the induced draft blower/motor assembly has to be replaced, care should be taken to provide an airtight seal between the blower housing and the burner box.

5.13.46.7. Gas Heat Exchanger Removal

WARNING

Electric shock hazard. Shut off all electrical power to the unit to avoid shock hazards or injuries from rotating parts.

DANGER

Leak Check Gas Pipe:
The gas pipe in the unit should be checked for leaks before operation and startup. The unit must not be placed in operation until a leak check has been conducted for all gas piping connections. All connections must be checked for leaks annually after installation. Gas leaks could result in fire, explosion, or other hazardous situations.

5.13.46.7.1. Removal

Verify that the unit power has been switched off.

Disconnect all wiring on the heat exchanger and disconnect the flex gas lines before pulling them out of the way.

Remove the screws around the perimeter of the heat exchanger face plate that connect it to the unit.

Note: Only the outermost screws should be removed.

Pull the heat exchanger straight back and out of the unit. It may be necessary to remove some of the control door jambs.

Reinstallation

Ensure that the neoprene isolator is installed around the perimeter of the heat exchanger. Insert the heat exchanger into the opening so the back of the main plate is against the unit bulkhead.

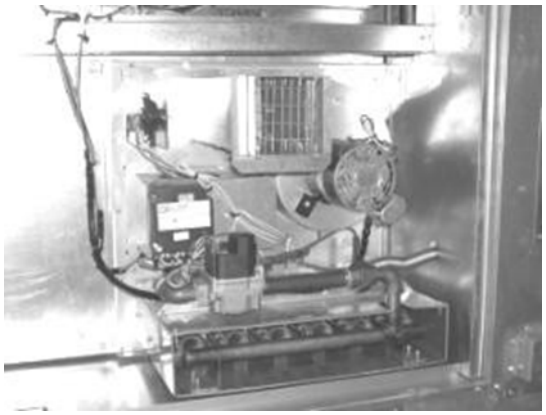

Figure 49: Gas Heat Exchanger

Attach the heat exchanger to the bulkhead using the holes around the perimeter.

Connect the flex gas lines to the piping on the heat exchanger. If flexible gas piping is used in the unit, it must be replaced. The connectors cannot be reused and will also need to be replaced.

Connect the wiring per the wiring diagram on the controls compartment door.

Purge the gas lines to the gas valves at the unit.

5.13.47. Direct-Fired Gas Heating

Direct-fired burners mix gaseous fuel and outside air to fire directly into the unit air stream. All available heat (minus the heat of vaporization) is released directly into the air stream. Optimal performance demands that air velocities be uniform across the entire burner. The profile plates around the burner are adjustable to maintain the required velocity. Adequate building relief should be designed and incorporated into the building. Non-recirculating units (100% outside air) should not be connected to any form of return duct. The outside air must be ducted directly outdoors.

Inlet and Manifold Pressures

For units with Direct Fire Heat, the minimum inlet gas pressure to the unit is 13.8 kpa (2 psi), and the maximum inlet gas pressure to the unit is 34.5 kpa (5 psi). A field provided 3.2 kpa (1/8 inch) NPT pressure tap is required to be installed in the piping upstream of the shutoff valve to test the gauge connection to allow for checking the gas supply pressure at the unit.

WARNING

On heaters that recirculate room air, outside ventilation air must be provided in accordance with the information shown on the heater nameplate.

5.13.47.1. Direct Fire Units with Return Air - Recirculating Operating Limits

Minimum return temperature- 40°F
Maximum return temperature- 35°C (95°F)
Maximum discharge temperature- 60°C (140°F)
Maximum temperature rise limits*:

RZA-045-140 tons = 32.2°C (90°F)
RZA-145-240 tons

- Burner shorter than 5' = 32.2°C (90°F)
- Burner 5' & longer = 37.8°C (100°

The burner comes with a pilot to ignite the flame, and the pilot includes an adjustable orifice. An ignition transformer and spark igniter provide the spark to ignite the pilot, which allows the pilot to light the main burner. The pilot and main burner flames are verified with a flame rod or UV flame supervisor. Their capacity is controlled by a modulating gas valve.

Table 40: Maximum Temperature Rise Setpoint for Return Air Units

Minimum Ventilation Rate (as % of total outside air throughput)	5%	10%	15%	20%	25%	30%	40%	50%	60%	100%
Maximum Temperature Rise Setpoint (°F)	10	22	35	47	59	72	*See maximum temperature rise limits above			
Maximum Temperature Rise Setpoint (°C)	-12.2	-5.6	1.7	8.3	15.0	22.2				

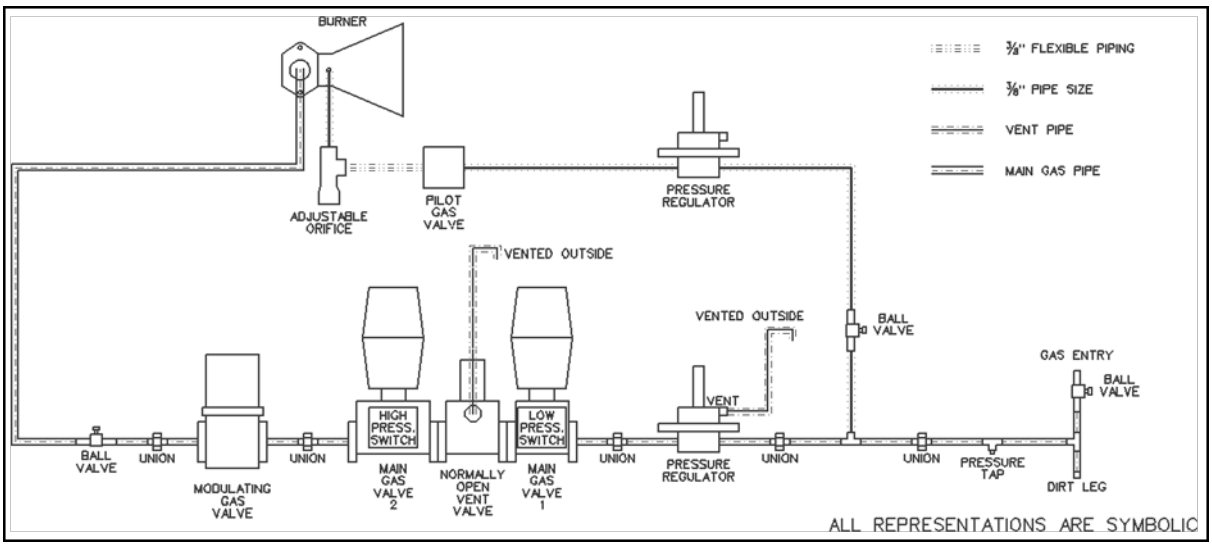

Figure 50: Typical Factory Mutual (FM) Gas Piping Schematic for a Direct-Fired Heater

5.13.47.2. Direct-Fired Units with Return Air - Purge Sequence of Operations

If the unit is in an off state or in a full economizer mode state before entering the heating mode, a purge sequence is necessary.

1. Close the outside air damper completely so the unit is operating in 100% return air.
2. Set the supply fan modulating output to the heating mode as configured for CAV heating.
3. Enable the supply fan if it is not already enabled.
4. Wait up to 30 seconds for the supply fan proving switch to engage.
    a) An airflow alarm will go off if the supply fan proving switch does not engage within 30 seconds.
5. Continue running the unit with the outdoor damper closed and the supply fan operating for 3 minutes.

5.13.47.3. Direct-Fired Ignition Sequence of Operations

1. Pre-purge the burner with fresh air for 30 seconds. The ignition will not proceed if flame is detected.
2. Pre-ignition the sparker for 2 seconds in air only.
3. Open the pilot gas valve for 10 seconds and verify the pilot flame detection. A safety shutdown occurs if the pilot is not detected by the end of 10 seconds.
4. When the pilot flame is proven, the sparker is deactivated, main gas valves one and two are opened, and the vent valve is closed.
5. The pilot valve is deactivated after a 10-second main flame establishment time.
6. The modulating gas valve can modulate to maintain its capacity based on a 0–10 VDC input to the modulating gas valve controller (the modulating gas valve controller sends a 0-20 VDC signal to the modulating gas valve).

5.13.47.4. Direct-Fired Safeties:

1. There is an air flow proving switch, which is a differential pressure switch, that is mounted across the supply blower bulkhead wall. This switch activates after reaching a pressure of 0.93 mmHg (0.5 inch w.c.).
2. There is an adjustable air side high-pressure switch on the inlet to the burner profile plate. This setting is application-specific, and the setpoint can be located on the unit nameplate.
3. There is an adjustable air side low-pressure switch on the outlet of the burner profile plate. This setting is application-specific, and the setpoint can be located on the unit nameplate.
4. There are door interlock switches on the air stream access doors, both upstream and downstream of the burner. These interlock switches will deactivate the heater if the doors are open.
5. There is a main limit switch downstream of the burner. This setting is shown on the unit nameplate.
6. There is an adjustable manual reset high gas pressure switch on Main Gas Valve 2. Set this switch to trip at 125% of the maximum manifold gas pressure as shown on the unit nameplate.
7. There is an adjustable manual reset low gas pressure switch on Main Gas Valve 1. Set this switch to trip at the minimum manifold gas pressure as shown on the unit nameplate.
8. There is an automatic reset valve proving switch located between the main shutoff valves. Set this switch at 50% of the incoming gas pressure.

5.13.47.5. Direct-Fired Initial Start-up Procedure:

1. Bleed any air from the main gas line.
2. Verify proper incoming gas pressure.
   a) Refer to the unit nameplate for information to determine the minimum gas supply pressure for obtaining the maximum gas capacity for which the heater is specified.
3. Adjust any incoming gas pressures with the main regulator (on the blocking valve actuator) to the required gas manifold pressure as shown on the unit nameplate.
4. Activate the supply fan for heating calls.
5. Verify that all dampers are in the correct position before and after activating the heating call.
6. Verify that the supply air, outside air, and return air (if applicable) flow rates are correct as ordered.
7. Activate a call for heat.
8. Close the main burner hand valve before opening the pilot valve to ignite the pilot. This may take several attempts to bleed any air from the line.
9. Verify the pilot flame size, color, and signal. Adjust the pilot during lighting to a hard, blue flame. The pilot signal must be between 1.25 VDC and 5 VDC. It is better to be closer to 5 VDC. Adjust the pilot pressure as necessary.
10. After the pilot has ignited, open the main burner hand valve to ignite the burner.
11. Measure the gas manifold pressure and adjust as necessary.
12. Verify that the airside differential pressure across the burner profile plates meets the unit specifications.
13. Verify the flame length and color. Troubleshoot if the flame has yellow tips. Flames with a slight yellow tipping are acceptable with liquid propane.

5.13.47.6. Direct-Fired First Firing or Restart after Extended Shut-down:

Before start-up or after an extended period of shutdown, the integrity of the system must be checked by an authorized service technician. Check the condition of the mixing plates, burner body drillings, as well as the general mechanical installation of the burner and piping. Check all of the bolted connections of the burner after the first firing and tighten as necessary.

5.13.47.7. Direct-Fired General Maintenance Instructions:

Makeup heat installations must be maintained and inspected at least once per season. More frequent maintenance and inspections must be carried out for applications that operate year round. As a minimum, the following procedures should be followed.

1. Shut the system down completely. Lock out the power supply to prevent an accidental start-up.
2. Inspect the burners carefully, including the upstream and downstream sides of the mixing plates, as well as the burner body face. Any accumulation of scale or foreign material on either side of the mixing plates must be removed with a wire brush. Visually inspect the holes in the mixing plates to verify that all of the holes are open without a blockage. Clean any carbon build-up present and troubleshoot for cause.
3. Replace or tighten any missing or loose fasteners. Always use zinc-plated or stainless metric fasteners.
4. Ensure that all vents to the atmosphere are clean and free from obstruction.
5. Inspect and clean all drip legs in the gas lines.
6. Inspect all electrical components, connections, and terminals. Clean and tighten them as necessary.
7. Clean the ignition electrodes if necessary.
8. Put the system back into operation and observe the complete operation of the burners through the full firing range. There is an observation viewport window in the gas piping compartment.
9. Observe the flame pattern and take any necessary steps to correct any velocity and/or air distribution problems.
10. Test the ignition spark and adjust the gap if necessary. Clean any carbon build-up on the ignition probes and troubleshoot for cause.
11. Inspect all of the valves and piping for proper operation and clean as necessary.
12. Inspect the UV sensor observation window. Clean any dust or debris present.

Inspection and Maintenance of Gas Ports:

1. Conduct an initial inspection within the first month after commissioning.
2. Check the gas ports of new burner assemblies for any piping scale or debris. Use the pin vise with a drill bit to remove the scale or debris (see below).
3. The operating conditions of the burner determine how frequently its maintenance is required. Annual inspections are normally adequate once the initial piping debris has been removed.

1) Pin vise
2) 1 inch
3) NP-LE AIRFLO® burner body (mixing plates not shown)
4) Gas ports - all are #43 drill size (exception is several #47 holes at the intersection of 12x6 tee's and 36 BI's)
5) #47 holes here
6) #43 holes

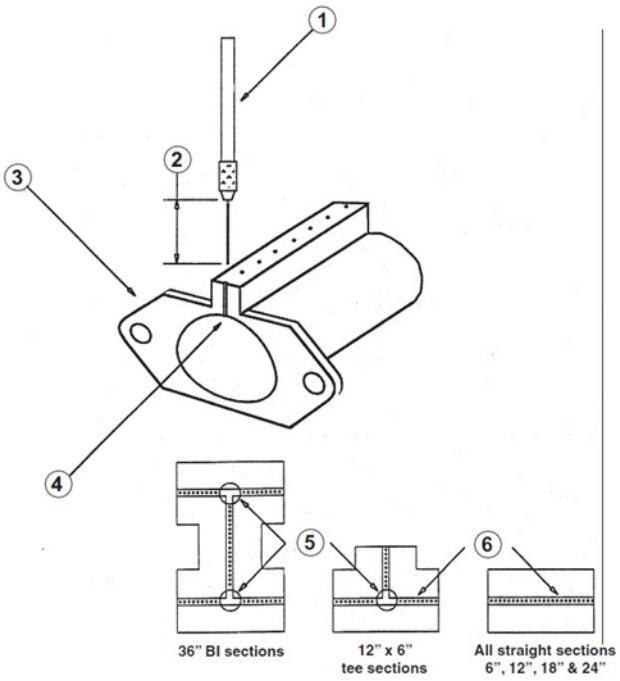

Figure 51: Removing Piping Scale with Pin Vise

5.13.48. Phase and Brownout Protection Module

Figure 52: Digital Phase and Brownout Protection Module

The DPM is a Digital Phase Monitor that monitors line voltages from 200VAC to 240VAC 1Φ and 200VAC to 600VAC 3Φ.

The DPM is 50/60 Hz self-sensing. The DPM must be wired according to the unit-specific wiring diagram included in the control compartment.

When the DPM is connected to the line voltage, it will monitor the line, and if everything is within the setup parameters, the output contacts will be activated. If the line voltages fall outside the setup parameters, the output relay will be de-energized after the trip delay.

Once the line voltages recover, the DPM re-energizes the output relay after the restart time delay. All settings and the last 4 faults are retained, even if there is a complete loss of power.

5.13.49. DPM Setup Procedure

With the supply voltage active to the module, users can set up all of the DPM's settings without the line voltage being connected.

To change the setpoint parameters, use the right arrow key to advance through the setpoint parameters, and the left arrow to back up if needed. When each parameter is displayed, use the up/down keys to change and set the parameter.

After adjustments are made, or if no adjustments are made, it takes 2 to 4 minutes for the DPM to energize the output relay, unless there is an out-of-tolerance issue with the incoming line voltage.

Table 41: PBO Recommended Settings

Recommended Default Set Up	
Line Voltage	460VAC, 3Ø
Over & Undervoltage	±10%
Trip Time Delay	5 Seconds
Re-Start Time Delay	2 Minutes
Phase Imbalance	5%

Figure 53: Analog PBO

The phase and brown out module may be this type on some products (as seen in Figure 60). No setup is needed with this module version, other than checking that the voltage jumper voltage matches the unit voltage.

5.13.50. Screens

Manufacturer's Screen

R-K Electronics
DPM v0.0.00

Table 42: Average Voltage Screen

Average Voltage Screen			
VAvg	Imb	Hz	
460	0	60	off

Table 43: The Default Screen Shows the Real-Time Voltage Detected in Each of the Three Phases

A-B	B-C	C-A	
460	459	461	ON

Table 44: Voltage Selection Screen (Vertical Format) Default = 460V, 3Ø

20,	1Ø;	208,	1Ø;	220,	1Ø;	230,	1Ø;	240,	1Ø;						
200,	3Ø;	208,	3Ø;	220,	3Ø;	230,	3Ø;	240,	3Ø;	380,	3Ø;	415,	3Ø;	440,	3Ø;
			460,	3Ø;	480	3Ø;	575,	3Ø;	600,	3Ø;					

Table 45: Over/Under Voltage Percentage Screen (Vertical Format) Default = 10%

7%	8%	9%	10%	11%	12%	13%	14%	&	15%

Table 46: Trip Time Delay Screen (Vertical Format) Default = 10%

2S,	3S,	4S,	5S,	6S,	27S,	8S,	9S	&	10S

Table 47: Re-Start Time Delay Screen (Vertical Format) Default = 2 sec

Manual,	2S,	3S,	4S,	5S,	6S,	7S,	8S,	9S,	10S,	30S,	1M,	2M,	3M	&	4M

Table 48: Phase Imbalance Percentage Screen (Vertical Format) Default = 5%

3%	4%	5%	6%	7%	8%	9%	&	10%

Table 49: Fault Screen (Vertical Format)

"0" most recent faults	"1" previous fault	"2" third oldest fault	&	"3" fourth oldest fault

Table 50: Fault Words

"Phase a Loss"	(There is no voltage sensed on 3-L1/S)
"Voltage Low"	(Average line voltage is less than the selected Undervoltage Percentage)
"Voltage High"	(Average line voltage is more than the selected Overvoltage Percentage)
"Imbalance"	(One phase is lower than the average voltage by more than the Imbalance percentage)
"Phase Loss	(One phase is more than 30% below the Line Voltage selection)
"Bad Rotation"	(The phase rotation sequence is reversed)

5.13.51. UV Light

Some units include UV lights for airstream disinfection. The UV fixture is installed directly downstream of the cooling coil. Door interlock switches are provided with this option. In addition to door interlock switch(es), the UV light safety circuit contains a latching-logic relay with a push-button reset located on the controls panel.

If a door opens, exposing the user to the UV bulbs, the door interlock switch will break the UV light safety circuit, killing power to the UV bulbs. The latching relay keeps the circuit open until the door interlock switch has returned to the closed position, and the push-button reset has been pressed. UV lamps ship loose in the vestibule and require installation during startup.

Useful lamp life shall be 9000 hours (minimum) with no more than a 15% output loss at the end of the lamp's life. Use AAON Part # R68860 for lamp replacement.

WARNING

UV Lights:
Never expose eyes or skin to UVC light from any source, as personal injury may result. Wear gloves, face shield/glasses (per ANSI Z87.1), and cover all exposed skin.

Table 51: Air Disinfection UV Information

RZ Cabinet Size	Cooling Coil Size	Model Option A3	CFM Max	Lamp Watt/SqFt Coil	Residence Time (Seconds)	Dose µJ/cm2*	Estimated Inactivation Rate (Coronavirus)
A, B & C (45-140 tons)	Standard	A, B, E, F, G	27,300	15.47	0.474	1,037	98.00%
D (145-180 tons)			46,200	18.73	0.600	1,419	99.50%
E (200-240 tons)			60,800	14.23	0.794	1,320	99.30%
A, B & C (90-140 tons)	Large	C, D, H, J, K	37,500	38.67	0.394	1,348	99.40%
D (145-180 tons)			53,500	16.18	0.659	1,292	99.20%
E (200-240 tons)			72,900	13.84	0.900	1,377	99.40%

*All dosages and estimated inactivation rates are at bulb end of life, have a wind chill degradation for 12.8°C (55°F) factored in, and factor in velocity on the coil. Warmer temperatures or lower airflows will increase the UV effectiveness.

5.13.52. Filter Replacement

WARNING

Electric shock hazard. Shut off all electrical power to the unit to avoid any shock hazards or injuries from rotating parts.

Monthly air filter inspections are required to maintain optimum unit efficiency.

Replace the filter media monthly. Filters are located upstream of the evaporator coil in the filter and economizer section. Open the access door and pull filters straight out to inspect all of the filters. Replace the filters with the size indicated on each filter or as shown in Table 42.

Table 52: RZ Series Filter Sizes

Unit Tonnage		MERV 8 Filters	4" Filters or Cartridge Filters			32" Bag Filters		
Air Cooled Condenser	Evaporative Condenser		Box A	Box B	Box C	Box A	Box B	Box C
45	51	(24) 16x24 38,400 CFM	(4) 20x24 (12)24x24 36,800 CFM*	(20)24x24 48,000 CFM*	(6) 20x24 (18)24x24 55,200 CFM*	(4) 20x24 (12)24x24 38,300 CFM*	(16)24x24 40,000 CFM*	(20)24x24 50,000 CFM*
55	66							
65	73							
75	79							
90	101	(36) 16x25 60,000 CFM						
105	109							
120	124	(36) 16x25 60,000 CFM						
130	136							
140	148							
145	161	(60) 16x20 80,000 CFM	(5) 20x24 (15)24x24 46,000 CFM*	(25)24x24 60,000 CFM*	(8) 20x24 (24)24x24 73,600 CFM*	(5) 20x24 (15)24x24 47,900 CFM*	(20)24x24 50,000 CFM*	(25)24x24 62,500 CFM*
160	172							
180	197							
200	221	(72) 16x20 96,000 CFM						
220	241							
240	261							

***Note**: When used in the Final position, the unit CFM limit will be the lesser of these values and the corresponding MERV 8 pre-Filters.

Table 53: Filter Conversion Table

Inches	Centimeters
[16 x 20 x 4]	[40.6 x 50.8 x 10.2]
[16 x 24 x 4]	[40.6 x 61 x 10.2]
[16 x 25 x 4]	[40.6 x 63.5 x 10.2]
[20 x 24 x 4]	[50.8 x 61 x 10.2]
[20 x 20 x 1]	[50.8 x 50.8 x 2.5]
[24 x 12 x 1]	[61 x 30.5 x 2.5]
[24 x 24 x 4]	[61 x 61 x 10.2]

Table 54: Metal Mesh and HEPA Filter Sizes

Unit		Metal Mesh Filters		HEPA Filters	
Air Cooled Condenser	Evaporative Condenser	Standard Rain Hood	100% Ext hood	Box A	Box B
45	51	(20) 20x20 **33,300 CFM**	(32)20x20 **53,300 CFM**	(9) 24x24 (6) 24x12 **28,000 CFM***	(12) 24x24 (10) 24x12 **40,800 CFM***
55	66				
65	73				
75	79				
90	101				
105	109				
120	124				
130	136				
140	148				
145	161	(28) 20x20 **46,600 CFM**	(48) 20x20 **80,000 CFM**	(15) 24x24 (5) 24x12 **42,000 CFM***	(24) 24x24 (8) 24x12 **67,200 CFM***
160	172				
180	197				
200	221				
220	241				
240	261				

Note: When used in the final position, the unit CFM limit will be the lesser of these values and the corresponding MERV 8 Pre-Filters.

5.13.53. Replacement Parts

Always use AAON-specified parts. Parts for AAON equipment may be obtained from your local AAON representative. When ordering parts, reference the unit serial number and part number.

AAON Warranty, Service, and Parts Department

2424 S. Yukon Ave.
Tulsa, OK 74107
Ph: 918-382-6450
techsupport@aaon.com www.AAON.com

Note: Before calling, the technician must have the model and serial number of the unit available for the customer service department to help answer questions regarding the unit.

Decommissioning

Before decommissioning a unit, ensure that the user is familiar with the unit and its operation. Only individuals qualified for handling refrigerants may remove the charge from the unit. The unit must be isolated electrically before beginning any decommissioning work. Proper PPE is required.

Ensure that any equipment needed for handling refrigerant cylinders safely is available. Equipment and cylinders used for recovery must be in good working order and comply with appropriate standards.

Operate the recovery machine in accordance with the instructions. Remove any refrigerant from all parts of the refrigeration system. On heat pumps, refrigerant must be recovered from discharge, suction, and common liquid lines.

Weigh out the refrigerant when removing to ensure that all refrigerant is removed and the cylinders are not overfilled. Place the refrigerant cylinders on a scale before beginning the recovery process. Do not exceed the maximum pressure of the cylinder.

When the recovery is completed, remove all of the cylinders containing recovered refrigerant from the site. Ensure that all of the isolation valves on the equipment are closed, and all warning decals are still visible on the unit. Label the unit as decommissioned and sign and date the label.

5.13.54. Warranty

Refer to the Limited Warranty certificate for the unit's warranty details. Contact an AAON representative for a unit-specific copy of the certificate for the unit's serial number.

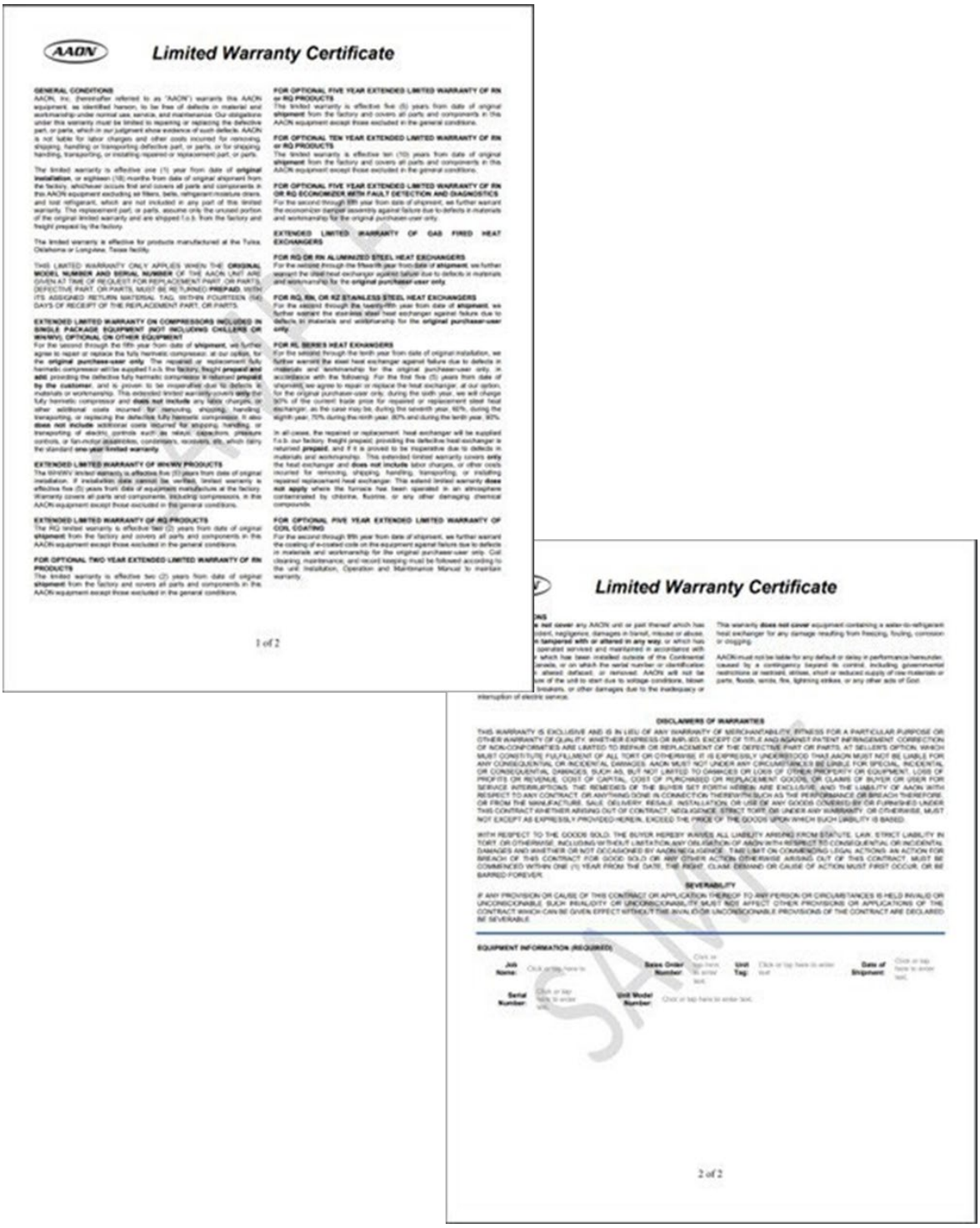

AAON

Limited Warranty Certificate

GENERAL CONDITIONS

FOR OPTIONAL FIVE YEAR EXTENDED LIMITED WARRANTY OF RN or RQ PRODUCTS

FOR OPTIONAL TEN YEAR EXTENDED LIMITED WARRANTY OF RN or RQ PRODUCTS

FOR OPTIONAL FIVE YEAR EXTENDED LIMITED WARRANTY OF RN OR RQ ECONOMIZER WITH FAULT DETECTION AND DIAGNOSTICS

EXTENDED LIMITED WARRANTY OF GAS FIRED HEAT EXCHANGERS

FOR RQ OR RN ALUMINIZED STEEL HEAT EXCHANGERS

FOR RQ, RN, OR RZ STAINLESS STEEL HEAT EXCHANGERS

FOR RL SERIES HEAT EXCHANGERS

EXTENDED LIMITED WARRANTY ON COMPRESSORS INCLUDED IN SINGLE PACKAGE EQUIPMENT (NOT INCLUDING CHILLERS OR WWWV), OPTIONAL ON OTHER EQUIPMENT

EXTENDED LIMITED WARRANTY OF WWWV PRODUCTS

EXTENDED LIMITED WARRANTY OF RQ PRODUCTS

FOR OPTIONAL TWO YEAR EXTENDED LIMITED WARRANTY OF RN PRODUCTS

FOR OPTIONAL FIVE YEAR EXTENDED LIMITED WARRANTY OF COIL COATING

1 of 2

Limited Warranty Certificate

DISCLAIMERS OF WARRANTIES

SEVERABILITY

EQUIPMENT INFORMATION (REQUIRED)

2 of 2

6. APPENDIX A: UNIT SAFETY HIERARCHY

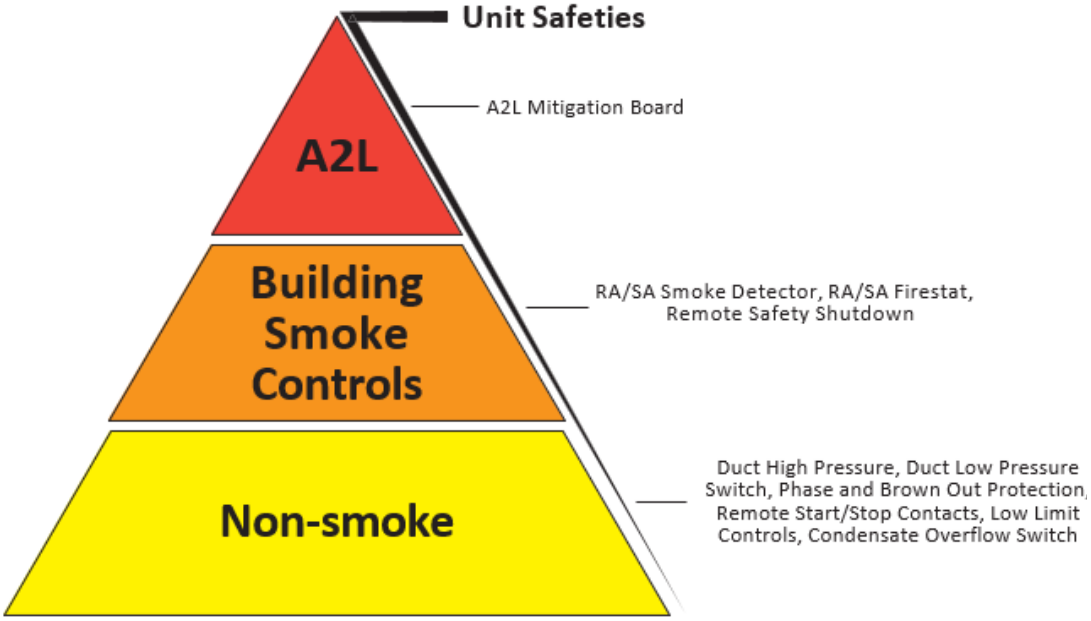

Figure 54: Unit Safety Hierarchy

Default (A2L Priority)

Units will ship with A2L sequences at the highest priority. This may activate the indoor blower in the event of an A2L leak, even if Building Smoke Controls or Non-smoke safeties interrupt the 24V/120V safety circuit. The terminal block labeled 'Hierarchy Control' will control the priority.

The jumper will connect 'Com' and 'A2L' for A2L priority.

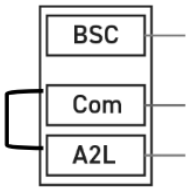

Figure 55: A2L Priority Jumper

Building Smoke Control Priority

Units will have the option to shift the Unit Safety Hierarchy in the field. To shift the priority, turn the power off to the unit and move the jumper to 'Com' and 'BSC' on the 'Hierarchy Control' terminals.

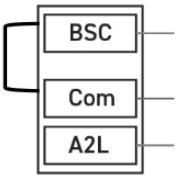

Figure 56: Building Smoke Control Priority Jumper

Example Scenario

If priority is given to Building Smoke Controls, and simultaneously both A2L and any of the Building Smoke Controls goes into alarm, the 24V/120V safety circuit will shut down the unit, and A2L mitigation will not take place.

Locating the "Hierarchy Control" LVTB

Locate the low voltage control section

Identify the 'Hierarchy Control' label by the (3) terminals labeled "BSC", "COM", and "A2L"

7. APPENDIX B: HEAT EXCHANGER CORROSION RESISTANCE

Corrosion Resistance of Copper and Stainless-Steel in Brazed Plate Heat Exchangers - Points to Measure and Check in a Water Analysis

The resistance guide provides information on the corrosion resistance of a stainless-steel type AISI 316 and pure Copper (99.9%) in water, to a number of important chemical factors. The actual corrosion resistance rate is a very complex process influenced by many different factors in combination.

Explanations:

- (+) Good resistance under normal conditions
- (0) Corrosion problems may occur, especially when multiple factors have a value of zero.
- (-) Use is not recommended

Table 55: Corrosion Resistance Guide

Water Containing	Concentration (mg/l or ppm)	Time Limits - Analyze Before	AISI 316	SMO 254	Copper Alloy	Nickel Alloy
Alkalinity (HCO_3^-)	< 70	Within 24 Hours	+	+	0	+
	70-300		+	+	+	+
	> 300		+	+	0/+	+
Sulfate (SO_4^{2-})	< 70	No Limit	+	+	+	+
	70-300		+	+	0/-	+
	> 300		0	0	-	+
HCO_3^-/ SO_4^{2-}	> 1.0	No Limit	+	+	+	+
	< 1.0		+	+	0/-	+
Electrical Conductivity	< 10µS/cm	No Limit	+	+	0	+
	10-500 µS/cm		+	+	+	+
	> 500 µS/cm		+	+	0	+
pH	< 6.0	Within 24 Hours	0	0	0	+
	6.0-7.5		0/+	+	0	+
	7.5-9.0		+	+	+	+
	> 9.0		+	+	0	+
Ammonium ($NH4^+$)	< 2	Within 24 Hours	+	+	+	+
	2-20		+	+	0	+
	> 20		+	+	-	+
Chlorides (Cl^-)*	< 300	No Limit	+	+	+	+
	> 300		0	+	0/+	+
Free Chlorine (Cl_2)	< 1	Within 5 Hours	+	+	+	+
	1-5		+	+	0	+
	> 5		0/+	+	0/-	+
Hydrogen Sulfide (H_2S)	< 0.05	No Limit	+	+	+	+
	> 0.05		+	+	0/-	+
Free (aggressive) Carbon Dioxide (CO_2)	< 5	No Limit	+	+	+	+
	5-20		+	+	0	+
	> 20		+	+	-	+

*See Chloride Content Table

Table 56: Corrosion Resistance Guide Continued

Water Containing	Concentration (mg/l or ppm)	Time Limits - Analyze Before	AISI 316	SMO 254	Copper Alloy	Nickel Alloy
Total Hardness (°dH)	4.0-8.5	No Limit	+	+	+	+
Nitrate (NO_3)	< 100	No Limit	+	+	+	+
	> 100		+	+	0	+
Iron (Fe)	< 0.2	No Limit	+	+	+	+
	> 0.2		+	+	0	+
Aluminum (Al)	< 0.2	No Limit	+	+	+	+
	> 0.2		+	+	0	+
Manganese (Mn)	< 0.1	No Limit	+	+	+	+
	> 0.1		+	+	0	+

Table 57: Chloride Content

Chloride Content	Maximum Temperature			
	60°C (140°F)	80°C (176°F)	120°C (248°F)	130°C (266°F)
= 10 ppm	SS 304	SS 304	SS 304	SS 316
= 25 ppm	SS 304	SS 304	SS 316	SS 316
= 50 ppm	SS 304	SS 316	SS 316	Ti / SMO 254
= 80 ppm	SS 316	SS 316	SS 316	Ti / SMO 254
= 150 ppm	SS 316	SS 316	Ti / SMO 254	Ti / SMO 254
= 300 ppm	SS 316	Ti / SMO 254	Ti / SMO 254	Ti / SMO 254
> 300 ppm	Ti / SMO 254	Ti / SMO 254	Ti / SMO 254	Ti / SMO 254

8. APPENDIX C: START-UP FORMS

8.1.1. RZ Series Startup Form (Pre-Startup Checklist)

1. Is there any visible shipping damage?	☐ Yes
2. Is the unit level?	☐ Yes
3. Are the unit clearances adequate for service and operation?	☐ Yes
4. Do all access doors open freely, and are the handles operational?	☐ Yes
5. Have all shipping braces been removed?	☐ Yes
6. Have all electrical connections been tested for tightness?	☐ Yes
7. Have all of the gas heat piping been checked for leaks?	☐ Yes
8. Does the electrical service correspond to the unit nameplate?	☐ Yes
9. Has the transformer tap been checked on the 208/230V units?	☐ Yes
10. Has adequate overcurrent protection been installed to match the requirements listed on the unit nameplate?	☐ Yes
11. Have all set screws on the fans been tightened?	☐ Yes
12. Do all of the fans rotate freely?	☐ Yes
13. Does the field water piping to the unit appear to be correct per design parameters?	☐ Yes
14. Is all of the copper tubing isolated so it does not rub?	☐ Yes
15. Have the damper assemblies been inspected?	☐ Yes
16. Are the air filters installed in the proper orientation?	☐ Yes
17. Have the condensate drain and p-trap been connected?	☐ Yes
18. Is the actual refrigerant charge of the largest circuit in accordance with the required conditioned floor area according to Table 16?	☐ Yes
19. Are the ventilation and exhaust openings unobstructed?	☐ Yes
20. Are the markings, decals, and warnings on the unit clearly visible?	☐ Yes
21. Have all damaged or illegible markings and warnings been replaced?	☐ Yes

8.1.2. A2L Mitigation Board

1. Does each port (sensors 1-3) have a male connector plugged into both the cabinet and airstream connections on the mitigation board?	☐ Yes
2. Does the compressor and gas heat operation shut off when the cabinet board sensor trips?	☐ Yes
3. Does normal unit operation commence, except for the compressor and gas heater, after the cabinet board sensor trips?	☐ Yes
4. Does the compressor shut off while the fan stays on when the airstream board sensor trips?	☐ Yes
5. Does the non-compressor or gas heating/cooling stay on when both boards trip? (electric heater stays on)	☐ Yes
6. When the A2L airstream alarm is activated, do supply fans start, VAV boxes open, and the compressors stop?	☐ Yes

8.1.3. Supply Fan Assembly

Alignment ☐	Check Rotation ☐	Nameplate Amps _____		
Number	**Hp**	**L1 Volts/Amps**	**L2 Volts/Amps**	**L3 Volts/Amps**
1				
2				
3				
4				
5				
6				
7				
8				
9				
10				
11				
12				
VFD Frequency _____		VAV Controls _____		

8.1.4. Energy Recovery Wheel Assembly

Wheel(s) Sprin Freely ☐		Check Rotation ☐		FLA _____
Number	Hp	L1 Volts/Amps	L2 Volts/Amps	L3 Volts/Amps
1				
2				

8.1.5. Power Return Assembly

Alignment ☐		Check Rotation ☐		Nameplate Amps _____
Number	Hp	L1 Volts/Amps	L2 Volts/Amps	L3 Volts/Amps
1				
2				
VFD Frequency _____				

8.1.6. Power Exhaust Assembly

Alignment ☐		Check Rotation ☐		Nameplate Amps _____
Number	hp	L1 Volts/Amps	L2 Volts/Amps	L3 Volts/Amps
1				
2				
VFD Frequency_____				

8.1.7. Outside Air/Economizer Dampers

Operation Check ☐
Damper Actuator Type:
Economizer Changeover Type and Operations:
Damper Wiring Check ☐
Gears Check ☐

8.1.8. Unit Configuration

Water- Cooled Condenser ☐	Air Cooled Condenser ☐
No Water Leaks ☐	Evaporative Condenser ☐
Condenser Safety Check ☐	
Water Flow_____GPM	
Water Inlet Temperature_____°F	
Water Outlet Temperature_____°F	

8.1.9. Compressors/DX Cooling

Number/Stage	L1 Volts/Amps	L2 Volts/Amps	L3 Volts/Amps	Head Pressure PSIG	Suction Pressure PSIG	Crankcase Heater Amps
1						
2						
3						
4						
5						
6						
7						
8						

8.1.10. Air Temperatures

Ambient DB Temperature _____°C/°F	Ambient WB Temperature _____°C/°F
Coil Entering Air DB Temperature _____°C/°F	Coil Entering Air WB Temp _____°C/°F
Coil Leaving Air DB Temperature _____°C/°F	Coil Leaving Air WB Temp _____°C/°F

8.1.11. Refrigeration Systems

Refrigeration System 1					
	Pressure	Saturated Temperature	Line Temperature	Sub-cooling	Superheat
Discharge				N/A	N/A
Suction				N/A	
Liquid					N/A
Refrigeration System 2					
	Pressure	Saturated Temperature	Line Temperature	Sub-cooling	Superheat
Discharge				N/A	N/A
Suction				N/A	
Liquid					N/A
Refrigeration System 3					
	Pressure	Saturated Temperature	Line Temperature	Sub-cooling	Superheat
Discharge				N/A	N/A
Suction				N/A	
Liquid					N/A
Refrigeration System 4					
	Pressure	Saturated Temperature	Line Temperature	Sub-cooling	Superheat
Discharge				N/A	N/A
Suction				N/A	
Liquid					N/A
Refrigeration System 5					
	Pressure	Saturated Temperature	Line Temperature	Sub-cooling	Superheat
Discharge				N/A	N/A
Suction				N/A	
Liquid					N/A
Refrigeration System 6					
	Pressure	Saturated Temperature	Line Temperature	Sub-cooling	Superheat
Discharge				N/A	N/A
Suction				N/A	
Liquid					N/A

8.1.12. Condenser Fans

Alignment ☐	Check Rotation ☐	Nameplate Amps_____		
Number	Hp	L1 Volts/Amps	L2 Volts/Amps	L3 Volts/Amps
1				
2				
3				
4				
5				
6				
7				
8				
9				
10				
11				
12				
13				
14				
15				
16				
VFD Frequency _____				

8.1.13. Evaporative Condenser Pumps

Check Rotation ☐				
Number	Hp	L1 Volts/Amps	L2 Volts/Amps	L3 Volts/Amps
1				
2				

8.1.14. Water/Glycol System

1. Has the entire system been flushed and pressure checked?	☐ Yes
2. Has the entire system been filled with fluid?	☐ Yes
3. Has air been bled from the heat exchangers and piping?	☐ Yes
4. If glycol is used, is it the proper type and concentration (N/A if water)?	☐ Yes
5. Is there a minimum load of 50% of the design load?	☐ Yes
6. Has the water piping been insulated?	☐ Yes

8.1.15. Gas Heating

Natural Gas ☐	Propane ☐	Purge Air from Lines ☐	Verify Pilot Spark ☐

Stage	Manifold Pressure (w.c.) inlet	Manifold Pressure (w.c.) outlet
1		
2		
3		
4		
5		
6		
7		
8		
9		
10		
11		
12		

8.1.16. Electric Heating

Stages _____	
Limit Lockout ☐	Aux. Limit Lockout ☐
Stage	**Volts/Amps**
1	
2	
3	
4	
5	
6	
7	
8	

8.1.17. Additional Findings

8.1.18. Signature

By signing this form, you verify that all of the information contained is correct and filled out to the best of your ability.

Name:		
Title:		
Rep/Contractor:		
Signature:_____		**Date/Time**:_____

9. APPENDIX D: MAINTENANCE LOGS

This log must be kept with the unit. It is the responsibility of the owner and/or maintenance/service contractor to document any service, repair, or adjustments. AAON Service and Warranty Departments are available to advise and provide phone help for proper operation and replacement parts. The responsibility for proper start-up, maintenance, and servicing of the equipment falls to the owner and a qualified licensed technician.

Entry Date	Action Taken	Name/Tel

10. APPENDIX E: MAINTENANCE LOG (E-COATED COIL)

Installation Site: _____ Installation Date: _____

Unit Model #: _____ Unit Location: _____

Unit Serial #: _____ Customer: _____

Year 20__	Ambient Temp (°F)	Surface Debris Removed	Coil Cleaned	Approved Cleaner Used	Potable Water Backwash Rinse	Potable Water Frontwash Rinse	Chlorides Removed	Comments
JAN		☐	☐	☐	☐	☐	☐	
FEB		☐	☐	☐	☐	☐	☐	
MAR		☐	☐	☐	☐	☐	☐	
APR		☐	☐	☐	☐	☐	☐	
MAY		☐	☐	☐	☐	☐	☐	
JUN		☐	☐	☐	☐	☐	☐	
JUL		☐	☐	☐	☐	☐	☐	
AUG		☐	☐	☐	☐	☐	☐	
SEP		☐	☐	☐	☐	☐	☐	
OCT		☐	☐	☐	☐	☐	☐	
NOV		☐	☐	☐	☐	☐	☐	
DEC		☐	☐	☐	☐	☐	☐	

The following cleaners have been approved for use on AAON E-Coated Coils to remove mold, mildew, dust, soot, greasy residue, lint, and similar particulates without harming the coated surfaces.

Cleaning Agent	Reseller	Part Number
GulfClean ™ Coil Cleaner Or Enviro-Coil Cleaner	RectorSeal 2601 Spenwick Drive, Houston, Texas 77055 (P): 713-263-8001	G074480 / 80406 Or V82540
GulfClean Salt Reducer ™	" "	G074480 / 80406

Recommended Chloride Remover
RectorSeal 2601 Spenwick Drive, Houston, Texas 77055 (P): 713-263-8001

11. LITERATURE CHANGE HISTORY

September 2020

Original version

January 2022

Added Evaporative Condenser sections. Added several options to the Feature String Nomenclature for Features 1, 2, 3B, 5A, 5B, 5C, 6B, 6C, 9B, 9C, 15, 19, and 21. Updated RZ Variable Speed Compressor VFD Frequency Range table. Added Hot Water, Steam, and Chilled Water Coil Connection Sizes tables. Updated the Evaporator Coil removal and reinstallation instructions. Updated the Condenser Fan removal instructions. Updated the Electric and Gas Heating Capacities tables. Updated the RZ 45-140-ton Unit Gas Piping Connections table. Updated the RZ Series Filter Sizes table. Added installation instruction for HEPA and metal mesh filters.

February 2022

Added direct-fired gas heating sections. Removed the RZ Variable Speed Compressor VFD Frequency Range table.

January 2023

Change compressor Hz warning from 25 Hz to 50 Hz. Added warning for heaters that recirculate room air; outside ventilation air must be provided in accordance with the information shown on the heater nameplate. Added recirculating operating limits and maximum temperature rise setpoints.

November 2023

Start of new UL 60335 version of RZ series IOM. Added New UL 60335 tables and standard. Added 35 and 65 KAIC tables. Added the Min and Max Water temps and pressures table. Added 454B Pressure Temperature charts as well as metric and imperial versions of 410A and 454B. Add new warning labels. Updated Feature string. Added metric conversions to all units in the IOM. Added option C to Feature 20. Added HEPA filter options to Feature 9. Adjusted CFM and filter quantities in Table 29.

January 2024

Added statement about working with flammable refrigerants. Added Additional warnings. Added tables listing the max allowable charges for a circuit. Added a warning about being cautious of exposed live wires. Added caution to ensure wires are protected from damage and wear. Added to charging warning, “Maximum allowable charge of any single circuit is 133 kg (4700 oz).”

June 2024

Added UV Lamp replacement part number. Added text to describe the reset circuit button for UV lamps.

August 2024

Added text to the gas heat section about gas input derate adjustments. Added the process of decommissioning the unit. Added text to General Information stating the maximum installation elevation is 11,500 ft.

September 2024

Added text providing details on the RDS mitigation board operation.

October 2024

Updated part number.

January 2025

Updated RDS section text. Updated Decommissioning text. Added A2L RDS Pre Start checklist.

October 2025

Updated and edited document formatting. Added another option to the Feature String Nomenclature 16A: Control Sequences. Removed an image in the Refrigeration Split Installation Procedure section. Removed the Back Draft Damper Setup section. Added an image, text, and a note to the Adjusting Refrigerant Charge section. Removed the section about Rain Hoods, as well as the image of the Gas Heater Rain Hood Screws. Removed the Thermistor Temperature vs Resistance Values Table.

June 2026

Updated section 5.8.7. Updated Figure 12.

September 2026

Updated Revision to “D”. Added “Install this appliance in accordance with local codes...” paragraph to Safety Section. Added clarifying language to section 5.10, 5.10.1, and 5.12.29. Added section 5.11.1.3. Removed section 5.12.45.

AAON

2425 South Yukon Ave.

Tulsa, OK 74107-2728

Phone: 918-583-2266

Fax: 918-583-6094

www.AAON.com

RZ Series

Installation, Operation, & Maintenance

G164830 · Rev. D · 20260915

AAON® is a subsidiary of The Aaon Group. It is the intent of The Aaon Group to provide accurate and current product information. However, in the interest of product improvement, The Aaon Group reserves the right to change pricing, specifications, and/or design of its product without notice, obligation, or liability.

Copyright © AAON®, all rights reserved throughout the world.

AAON® and AAONAIRE® are registered trademarks of The Aaon Group, Tulsa, OK.