Installation, Operation, and Maintenance Manual

2026

RQ Series (2-5 ton)

Packaged Rooftop Units, Heat Pumps, and Outdoor Air Handling Units

The information in this document is subject to change. Printed versions may not reflect the most current updates. Please ensure that you have the most recent version prior to referencing any information within the document. Visit www.aaon.com to confirm your version is up to date, or to download the most recent version.

R-454B

Conforms to UL STDs 60335-1 and 60335-2-40

Rev D Version 20260922

This Page Intentionally Left Blank

TABLE OF CONTENTS

1. SAFETY 1
2. NOTES, CAUTIONS, AND WARNINGS 3
3. AAON RQ SERIES FEATURES AND OPTIONS INTRODUCTION 11
4. RQ FEATURE STRING NOMENCLATURE 13
4.1. RQ Series - Feature String Description 13
5. GENERAL INFORMATION 27
5.2. Installation 30
5.3. Draw Through Coils 43
5.4. Startup 46
6. OPERATION 58
6.1. Refrigerant Detection System 59
6.2. Thermostat Operation 60
6.3. Packaged DX Cooling Operation and Control 60
6.4. Gas Heater Operation 61
6.5. Electric Heating Operation 61
6.6. Steam or Hot Water Preheating and Heating Operation 61
6.7. Modulation Electric Preheat 61
6.8. Chilled water or Non-compressorized DX Cooling Operation 61
7. MAINTENANCE 63
7.1. Supply Fan 63
7.2. DX Cooling 64
7.3. Condensate Drain Pans 64
7.4. E-Coated Coil Cleaning 65
7.5. Microchannel Coil Cleaning 67
8. OPTIONS 70
8.1. Heating Coils 70
8.2. Chilled Water Coil 70
8.3. Packaged Direct Expansion (DX) Units 71
8.4. Evaporator Coil 75
8.5. Condenser Fan 75
8.6. Refrigerant-to-Water Heat Exchanger 76
8.7. Energy Recovery Units 81
8.8. Controls 84
8.9. Routine Maintenance and Handling 84
8.10. Air Seals 87

8.11. Wheel Drive Components ... 87
8.12. Installation Considerations ... 87
8.13. Gas or Electric Heating ... 91
8.14. Electric Preheat ... 93
8.15. Leak Testing ... 100
8.16. Gas Heater Operating Instructions ... 101
8.17. Phase and Brownout Protection Module ... 104
9. SCREEN ... 105
9.1. Manufacturer's Screen ... 105
9.2. Filter Replacement ... 106
9.3. Replacement Parts ... 108
9.4. Decommissioning ... 109
10. WARRANTY ... 110
11. APPENDIX A - HEAT EXCHANGER CORROSION RESISTANCE ... 111
12. APPENDIX B - UNIT SAFETY HIERARCHY ... 114
13. RQ SERIES START-UP FORMS ... 115
13.1. Pre-Startup Checklist ... 115
13.2. A2l Refrigerant Detection System (RDS) Pre-Start Checklist ... 116
13.3. Ambient Temperature ... 116
13.4. Supply Fan Assembly ... 116
13.5. Energy Recovery Wheel Assembly ... 116
13.6. Power Exhaust Fan Assembly ... 116
13.7. Outside Air/Economizer Dampers ... 117
13.8. Unit Configuration ... 117
13.9. Compressors/DX Cooling ... 117
13.10. Refrigeration Systems ... 117
13.11. Air-Cooled Condenser Fans ... 118
13.12. Water/Glycol System ... 119
13.13. Gas Heating ... 119
13.14. Electric Heating ... 119
13.15. Electric Preheating ... 120
13.16. Additional Findings ... 121
13.17. Signature ... 122
14. APPENDIX C - MAINTENANCE LOGS ... 123
15. APPENDIX D: MAINTENANCE LOG (E-COATED COIL) ... 124
16. LITERATURE CHANGE HISTORY ... 125

TABLE OF FIGURES

Figure 1: Lockable Handle 29
Figure 2: RQ Series Orientation 30
Figure 3: RQ Cabinet Standard and Power Exhaust Gasket Locations 32
Figure 4: Forklifting an RQ Series Unit from the Side 33
Figure 5: Forklifting an RQ Series Unit from the Top 33
Figure 6: Lifting Details of a 2-5-ton Standard or Power Exhaust Unit 34
Figure 7: Lifting Details of a 2-5-ton Energy Recovery Wheel Unit 34
Figure 8: Sectional View of the Unit on Roof Curb 35
Figure 9: Unit Base Connection 35
Figure 10: Knock Down Curb Duct Support Rail Connection 35
Figure 11: Solid Bottom Curb Connection 35
Figure 12: Solid Bottom Curb Connections 35
Figure 13: Seismic Solid Bottom Curb Without Filters, Cross Section 36
Figure 14: Seismic Solid Bottom Curb without Filters, Detail A 36
Figure 15: Seismic Solid Bottom Curb without Filters, Detail B 36
Figure 16: Seismic Rigid Mount Curb Cross Section 36
Figure 17: Horizontal Duct Connections 37
Figure 18: RQ Series Unit Closed Rain Hood 37
Figure 19: RQ Series Unit Open Rain Hood 37
Figure 20: Rain Hood with Metal Mesh Filter Rack Installation 38
Figure 21: Unit Base Utility Entry 39
Figure 22: Back View of Power Switch from Control Compartment 39
Figure 23: Voltage Imbalance Example 40
Figure 24: Draw Through Drain Trap 43
Figure 25: Post Corner Hole Location 44
Figure 26: Post Back Hole Location 44
Figure 27: Post Corner Hole Piping 45
Figure 28: Post Back Hole Piping 45
Figure 29: PIN Connectors on EC Supply Fan Motor Electronics 46
Figure 30: Adjustable Fan Cycling Necessary Tools 57
Figure 31: Cut in and Differential Pressure View 57
Figure 32: Adjustable Setting Screws 57
Figure 33: Cut in Gauge 57
Figure 34: Differential Gauge 57
Figure 35: A2L Sensor Connections 59

Figure 36: 2-5-Ton Supply Fan 64
Figure 37: RQ Supply Fan Removal Bolts 64
Figure 38: RQ Supply Fan Removal Slide 64
Figure 39: Variable Capacity Compressor Controllers 72
Figure 40: Evaporator Coil Access 75
Figure 41: Removal of a Condenser Fan Assembly 76
Figure 42: Energy Recovery Wheel 81
Figure 43: Cross Section of Air Seal Structure 82
Figure 44: Loosen Adjusting Screws 83
Figure 45: Loosen Adjusting Screws 83
Figure 46: Adjusting Purge Seal 83
Figure 47: Loosen Adjusting Screws 84
Figure 48: Diameter Seal Adjustment 87
Figure 49: Avoid Racking of Cassette Frame 88
Figure 50: Hub Seal Adjustment 88
Figure 51: Wheel Removal 89
Figure 52: Remove Center Screen from Wheel Shaft 89
Figure 53: Belt Replacement 91
Figure 54: RQ Series Gas Heat Exchanger 94
Figure 55: RQ Series Gas Heat Exchanger 99
Figure 56: Switch in the Off Position 101
Figure 57: Gas Heat Exchanger 103
Figure 58: Brownout Protection Module 104
Figure 59: Phase and Brownout Module 104
Figure 60: RQ Series 2-5-Ton Standard Filter Layout (Viewed on the Upstream Side of the Cooling Coil) 106
Figure 61: Unit Safety Hierarchy 114
Figure 62: A2L Priority Jumper Phases 114
Figure 63: Building Smoke Control Priority Jumper 114

TABLE OF TABLES

Table 1: Unit Clearances 30
Table 2: Nameplate Voltage, Markings, and Tolerances 38
Table 3: 35 KAIC Fuse Sizing 40
Table 4: 65 KAIC Fuse Sizing 40
Table 5: Single-Circuited Variable Speed Compressor Frequency Range 41
Table 6: Single-Circuited Variable Speed Refrigerant Injection Compressor Frequency Range 41
Table 7: Control Wiring 41
Table 8: Draw Through Drain Trap Dimensions 43
Table 9: Acceptable Refrigeration Circuit Values (Metric) 49
Table 10: Acceptable Refrigeration Circuit Values (Imperial) 49
Table 11: Minimum Floor Area per UL 60335 2-40 (LFL Basis) 50
Table 12: Minimum Floor Area per UL 60335 2-40 (LFL Basis) Continued 51
Table 13: Adjustment for Local Elevation 51
Table 14: Acceptable Microchannel Air-Cooled Condenser Coil Liquid Sub-Cooling Values (Metric) 51
Table 15: Acceptable Microchannel Air-Cooled Condenser Coil Liquid Sub-Cooling Values (Imperial) 52
Table 16: R-454B Refrigerant Temperature-Pressure Chart (Metric) 54
Table 17: R-454B Refrigerant Temperature-Pressure Chart (Imperial) 55
Table 18: EC Condenser Fan Cycling Options 56
Table 19: Hot Water Coil Connection Sizes 70
Table 20: Steam Coil Connection Sizes 70
Table 21: Chilled Water Coil Connection Sizes 70
Table 22: Min. and Max. Water Pressures and Temps. 70
Table 23: Demand Signal VS Compressor Capacity Modulation 73
Table 24: Compressor Controller LED Descriptions 73
Table 25: Compressor Controller Alert Flash Codes 74
Table 26: Glycol Concentration Freezing Points 79
Table 27: Glycol Concentration Freezing Points 79
Table 28: Energy Recovery Wheel Cleaning Frequency 85
Table 29: Electric and Gas Heating Capacities 92
Table 30: Auxiliary Electric Heating Capacities 92
Table 31: 2-5-Ton Gas Connections 94
Table 32: (Metric) Natural Gas Maximum Piping Capacities (M^3/HR) 94
Table 33: (Imperial) Natural Gas Maximum Piping Capacities (Ft^3/HR) 95
Table 34: (Metric) Propane (KW) Maximum Piping Capacities 95
Table 35: (Imperial) Propane (KBTU/HR0 Maximum Piping Capacities 95

Table 36: Gas Piping Supports (Metric) 97
Table 37: Gas Piping Supports (Imperial) 97
Table 38: Voltage Selection Screen (Vertical Format) - Default = 460V, 3Ø 105
Table 39: Over/Under Voltage Percentage Screen (Vertical Format) - Default = 10% 105
Table 40: Trip Time Delay Screen (Vertical Format) - Default = 5 sec 105
Table 41: Re-Start Time Delay Screen (Vertical Format) - Default = 2 sec 105
Table 42: Phase Imbalance Percentage Screen (Vertical Format) - Default = 5% 105
Table 43: RQ Series 2-5-Ton Pre-filters 107
Table 44: RQ Series 2-5-ton Unit Filters 107
Table 45: RQ Series 2-5-Ton Energy Recovery Wheel Filters 107
Table 46: Corrosion Resistance 111
Table 47: Corrosion Resistance Continued 112
Table 48: Chloride Content 112
Table 49: Thermistor Temperature vs Resistance Values 113

1. SAFETY

Attention must be paid to the following statements:

Startup and service must be performed by a Factory-Trained Service Technician competent in working with flammable refrigerants.

Gas heat units must be installed outdoors. See the General Information section for more information.

Only use the gas heat units with the type of gas approved for the furnace. Refer to the furnace rating plate for details.

Provide adequate combustion ventilation air to the furnace. If a vent duct extension is used, a class III approval vent is required. See the Locating Units and Gas Heating sections of the manual.

Install and operate the furnace within the intended temperature rise range and duct system external static pressure (ESP) as specified on the unit nameplate.

Install this appliance in accordance with local codes. In the absence of local codes, install in accordance with ASHRAE 15, ASHRAE 15.2, IAPMO Uniform Mechanical Code, ICC International Mechanical Code, or CSA B52.

The supply and return air ducts must be derived from the same space. Ducts should be provided with access panels to allow for inspections of duct tightness. When a downflow duct is used with electric heat, the exhaust duct must be an L-shaped duct. If the plenum return is to be utilized, the return plenum must be provided with a refrigerant detection system or ventilation in accordance with ASHRAE 15 requirements.

Clean the furnace, duct, and components upon completion of the construction setup. Verify the furnace operating conditions, including input rate, temperature rise, and ESP.

Every unit has a unique equipment nameplate with electrical, operational, and unit clearance specifications. Refer to the unit nameplate for specific ratings unique to the model purchased.

Note: Read the entire installation, operation, and maintenance manual. Other important safety precautions are provided throughout this manual.

Keep this manual and all literature safeguarded near or on the unit.

This product is designed for the use of R-45B refrigerant only. The use of any other refrigerant in this product is not covered under ETL listing and will void the warranty.

This Page Intentionally Left Blank

2. NOTES, CAUTIONS, AND WARNINGS

Note: Notes are intended to clarify the unit installation, operation, and maintenance.

CAUTION

Caution statements are given to prevent actions that may result in equipment damage, property damage, or personal injury.

WARNING

Warning statements are given to prevent actions that could result in equipment damage, property damage, or serious injury.

DANGER

Danger statements are given to prevent actions that will result in equipment damage, property damage, severe personal injury, or death.

WARNING

Electric Shock, Fire, or Explosion Hazard:
Failure to follow safety warnings could result in dangerous operation, serious injury, death, or property damage.

Improper servicing could result in dangerous operation, serious injury, death, or property damage.

- Before servicing, disconnect all electrical power to the furnace. More than one disconnect may be provided.
- When servicing controls, label all wires prior to disconnecting. Reconnect wires correctly after servicing.
- Verify proper operation after servicing. Secure all doors with a key lock or a nut and bolt.

WARNING

Carbon Monoxide Poisoning Hazard:
Failure to follow instructions could result in severe personal injury or death due to carbon-monoxide poisoning if combustion products infiltrate into the building.

Check that all openings in the outside wall around the vent (and air intake) pipe(s) are sealed to prevent infiltration of combustion products into the building.

Check that the furnace vent (and air intake) terminal(s) are not obstructed in any way during all seasons.

WARNING

Electric Shock Hazard:
Before servicing, shut off all electrical power to the unit, including remote disconnects, to avoid shock hazard or injury from rotating parts. Follow proper Lockout-Tagout procedures.

WARNING

Rotating Components:
The unit contains fans with moving parts that can cause serious injury. Do not open the door containing fans until the power to the unit has been disconnected and the fan wheel has stopped rotating.

WARNING

Fire, Explosion, or Carbon Monoxide Poisoning Hazard:
Failure to replace proper controls could result in fire, explosion, or carbon monoxide poisoning. Failure to follow safety warnings exactly could result in serious injury, death or property damage. Do not store or use gasoline or other flammable vapors and liquids in the vicinity of this appliance.

WARNING

Grounding Required:
All field installed wiring must be completed by qualified personnel. Field installed wiring must comply with NEC/CEC, local, and state electrical code requirements. Failure to follow code requirements could result in serious injury or death. Provide proper unit ground in accordance with these code requirements.

WARNING

This appliance is not intended for use by persons with reduced physical, sensory, or mental capabilities, or a lack of experience and knowledge, unless they have supervision or instruction concerning the use of the appliance by a person responsible for their safety. Children must be supervised around this appliance.

WARNING

During installation, testing, servicing, and troubleshooting of the equipment, it may be necessary to work with live electrical components. Only a qualified licensed electrician or an individual properly trained in handling live electrical components must perform these tasks.

Standard NFPA-70E, an OSHA regulation requiring an Arc flash boundary to be field established and marked for identification of where appropriate Personal Protective Equipment (PPE) be worn, must be followed.

WARNING

Variable Frequency Drives:
Do not leave VFDs unattended in hand mode or manual bypass. Damage to personnel or equipment can occur if left unattended. When in hand mode or manual bypass mode, VFDs will not respond to controls or alarms.

WARNING

Water Freezing:
Failure of the condenser due to freezing will allow water to enter the refrigerant circuit and will cause extensive damage to the refrigerant circuit components. Any damage to the equipment as a result of water freezing in the condenser is excluded from coverage under AAON warranties and the heat exchanger manufacturer's warranties.

WARNING

Unit Handling:
To prevent injury or death, the lifting equipment capacity must exceed the unit weight by an adequate safety factor. Always test-lift the unit no more than 24 inches high to verify the proper center of gravity lift point to avoid unit damage, injury, or death.

WARNING

Compressor Cycling:
3 Minute Minimum Off Time - To prevent the motor from overheating, compressors must cycle off for a minimum of 3 minutes.
5 Minute Minimum on Time - To maintain the proper oil level, compressors must cycle on for a minimum of 5 minutes.
The cycle rate must not exceed 7 starts per hour.

WARNING

Do not use oxygen, acetylene, or air in place of refrigerant and dry nitrogen for leak testing. A violent explosion may result, causing injury or death.

WARNING

Units with VFD driven moors/compressors have adjustable overload settings. These are set by the AAON factory for the protection of these motors/compressors and must not be adjusted over their factory setpoint or bypassed.

WARNING

Water Pressure:
Prior to connection of the condensing water supply, verify water pressure is less than the maximum pressure shown on the unit nameplate. To prevent injury or death due to the instantaneous release of high-pressure water, a relief valve must be field supplied on the system water piping.

WARNING

Do not operate UV-C lamps outside the unit.

WARNING

Always use a pressure regulator, valves, and gauges to control incoming pressures when pressure testing a system. Excessive pressure may cause line ruptures, equipment damage, or an explosion, which may result in injury or death.

WARNING

Units containing UV-C Germicidal lamps should not be operated with damage to the cabinet of the unit. UV-C radiation may, even in small doses, cause harm to the eyes and skin.

WARNING

Some chemical coil cleaning compounds are caustic or toxic. Use these substances only in accordance with the manufacturer's usage instructions. Failure to follow instructions may result in equipment damage, injury, or death.

WARNING

Doors and panels with access to UV-C lamps, with possible irradiance exceeding 1.7 $\mu W/cm^2$ are provided with an interlock switch. Do not override.

WARNING

Open Loop Applications:
Failure of the condenser as a result of chemical corrosion is excluded from coverage under AAON Inc. warranties and the heat exchanger manufacturer's warranties.

WARNING

If a refrigerant leak is detected, remove/extinguish all sources of open flame. If repairing a refrigerant leak requires brazing, remove all refrigerant before beginning brazing.

WARNING

Connected ductwork must be free of potential ignition sources, such as hot surfaces above 700 °C (1292 °F) or electrical devices prone to arcing or sparking. Potential ignition sources within the ductwork may only be allowed if the minimum air velocity across these components is above 1 m/s (200 ft/min) during any point at which the component can function.

WARNING

The Refrigerant Detection System activates circulation airflow. In the event of a refrigerant leak within the airstream, the indoor blower is activated to provide circulation airflow. The mitigation board is provided with an alarm output. Wire all zone dampers and VAV boxes to alarm output to open in the event of a refrigerant leak alarm.

WARNING

This appliance contains a flammable refrigerant. Minimum floor area on nameplate is based on factory charge at a ceiling/release height of 2.2 m (7.2 ft) in accordance with UL 60335-2-40. Refer to Table 11 for different allowable room areas based on other charges and ceiling/release heights. Apply the altitude adjustment factor to table values as required by local codes.

WARNING

Flammable refrigerant. Be aware that refrigerant does not contain an odor.

WARNING

If this appliance is installed to serve a conditioned area less than the minimum area as indicated in Table 11, the served space must be free of continuously operating open flames or other sources of ignition. Additional ventilation is required in accordance with ASHRAE 15.

WARNING

Ensure that there are no live electrical components or wiring exposed when adjusting charge, recovering charge, or purging the system. Ensure that earthing continuity is unbroken.

WARNING

Only auxiliary devices approved by the manufacturer or declared suitable with the refrigerant may be installed in ductwork.

WARNING

Flammable refrigerant. Do not pierce or burn tubing or refrigerant containing components.

WARNING

Minimum circulation airflow is required to prevent stagnation of refrigerant in the event of a refrigerant leak. Zone dampers and VAV boxes must be operated to allow for minimum circulation airflow in the event of a refrigerant leak.

WARNING

If any damage or fault to electrical equipment exists, do not provide power to the unit. If the issue cannot be resolved immediately, report the issue to the equipment owner to ensure power is not supplied before the issue is resolved.

WARNING

Do not use a torch or other potential ignition source to detect refrigerant leaks. Use only an electronic detector suitable for the refrigerant, or the bubble method with chlorine free detergent.

WARNING

Do not use means to accelerate the defrosting process or to clean, other than those recommended in this manual.

WARNING

The appliance shall be stored in a room without continuously operating ignition sources (i.e., open flames, operating gas appliances, or operating electric heaters).

WARNING

The outside air economizer utilizes an actuator for modulating damper control. If manually adjusting the potentiometer, the torque applied must not exceed 0.75 oz-inch. Over-torquing the potentiometer will cause damage and may void the parts warranty.

CAUTION

What To Do If You Smell Gas:

- Do not try to turn on the unit.
- Shut off the main gas supply.
- Do not touch any electric switch.
- Do not use any phone in the building.
- Never test for gas leaks with an open flame.
- Use a gas detection soap solution and check all gas connections and shut off valves.

Startup and service must be performed by a Factory Trained Service Technician competent in working with flammable refrigerants.

CAUTION

Rotation must be checked on all motors and compressors of three-phase units at startup by a qualified service technician. Scroll compressors are directional and can be damaged if rotated in the wrong direction. Compressor rotation must be checked using suction and discharge gauges. Fan motor rotation must be checked for proper operation. Alterations must only be made at the unit power connection.

CAUTION

To avoid a hazard due to inadvertent resetting of the thermal cut-out, this appliance must not be supplied through an external switching device, such as a timer, or connected to a circuit that is regularly switched on and off by the utility.

CAUTION

To prevent damage to the unit, do not use acidic chemical coil cleaners. Do not use alkaline chemical coil cleaners with a pH value greater than 8.5, after mixing, without first using an aluminum corrosion inhibitor in the cleaning solution.

CAUTION

Electric motor over-current protection and overload protection may be a function of the Variable Frequency Drive to which the motors are wired. Never defeat the VFD motor overload feature. The overload ampere setting must not exceed 115% of the electric motors FLA rating as shown on the motor nameplate.

CAUTION

Do not clean DX refrigerant coils with hot water or steam. The use of hot water or steam on refrigerant coils will cause high pressure inside the coil tubing and damage to the coil.

CAUTION

Failure to properly drain and vent coils when not in use during freezing temperatures can result in damage to the coils and equipment.

CAUTION

Door compartments containing hazardous voltage or rotating parts are equipped with door latches to allow locks. Door latches are shipped with nuts and bolts requiring tooled access. If you do not replace the shipping hardware with a padlock, reinstall the nut & bolt after closing the door.

CAUTION

Disconnect power to the unit before servicing UV-C lamps.

CAUTION

Cleaning the cooling tower or condenser water loop with harsh chemicals such as hydrochloric acid (muriatic acid), chlorine or other chlorides, can damage the refrigerant-to-water heat exchanger. Care must be taken to avoid allowing chemicals to enter the refrigerant-to-water heat exchanger. See Appendix A - Heat Exchanger Corrosion Resistance for more information.

CAUTION

If an electrical component requires changing, verify specifications and intended application match the component to be replaced, including sealed or intrinsically safe specifications. Sealed or intrinsically safe components that are damaged must be replaced. Electrical components must be free from producing arcs or sparks. The maintenance guidelines in this manual must always be followed. If in doubt, contact Factory Technical Support.

CAUTION

The unit power supply wire must be made of only copper or aluminum.

3. AAON RQ SERIES FEATURES AND OPTIONS INTRODUCTION

Energy Efficiency

- Direct Drive Backward Curved Plenum Supply Fans
- Two-Stage, Variable Capacity and Variable Speed Scroll Compressors
- Vapor Injection Variable Speed Compressor
- Airside Economizers
- Factory Installed AAONAIRE® Energy Recovery Wheels
- Double Wall Rigid Polyurethane Foam Panel Construction, R-13 Insulation
- Modulating Natural Gas Heaters
- Modulating/SCR Electric Heaters
- Premium Efficiency Motors
- Variable Speed Supply/ Exhaust Fans
- Air-Source, Water-Source, and Geothermal Heat Pumps
- Low and Ultra Low Ambient Heating

Indoor Air Quality

- 100% Outside Air
- Constant Volume Outside Air Control
- Economizer CO_2 Override
- High Efficiency Filtration
- Interior Corrosion Protection

Humidity Control

- High-Capacity Cooling Coils
- Variable Capacity Compressors
- Factory Installed AAONAIRE® Total Energy Recovery Wheels
- Modulating Hot Gas Reheat

Safety

- Burglar Bars
- Freeze Stats
- Hot Water/Steam Preheat Coils
- Electric Preheat
- Phase and Brown Out Protection
- Supply/Return Smoke Detectors
- Supply/Return Firestats

Installation And Maintenance

- Clogged Filter Switch
- Color Coded Wiring Diagram
- Compressors in Isolated Compartment
- Compressor Isolation Valves
- Convenience Outlet
- Direct Drive Supply Fans
- Hinged Access Doors with Lockable Handles
- Magnehelic Gauge
- Service Lights
- Sight Glass

System Integration

- Chilled Water-Cooling Coils
- Controls by Others
- Electric/Natural Gas/LP Heating
- Hot Water/Steam Heating Coil
- Non-Compressorized DX Coils
- Water-Cooled Condensers

Environmentally Friendly

- Airside Economizers
- Factory Installed AAONAIRE® Energy Recovery Wheels
- R-454B Refrigerant

Extended Life

- 2-Year Standard Warranty
- 5-Year Compressor Warranty
- 15-Year Aluminized Steel Heat Exchanger Warranty
- 25-Year Stainless-Steel Heat Exchanger Warranty
- Interior Corrosion Protection
- Polymer E-Coated Coils - 5 Year Coating Warranty
- Stainless-Steel Coil Casing
- Stainless-Steel Drain Pans

4. RQ FEATURE STRING NOMENCLATURE

The following is an example of the RQ Series Feature String.

RQQ-030-C-0-3-CAB0A-00000:01-0AG0K-E00-00000-00000-CA-0000-00-00-0-000-00-BA0B-00-000-A00000-C00000-000000B

4.1. RQ Series - Feature String Description

4.1.1. RQ Model Options Breakdown

GEN	MREV		SIZE		SERIES		MNREV		VLT		
RQ	**A**	**-**	**003**	**-**	**A**	**-**	**A**	**-**	**3**	**-**	CAB0A-00000:01-0AG0K-E00-00000-00000-CA-0000-00-00-0-000-00-BA0B-00-000-A00000-C00000-000000B

Generation

RQ

Major Revision

A

Unit Size

002 = 2-ton Capacity
003 = 3-ton Capacity
004 = 4-ton Capacity
005 = 5-ton Capacity

Series

A

Minor Revision

A

Voltage

1 = 230V/1Φ/60Hz
2 = 230V/3Φ/60Hz
3 = 460V/3Φ/60Hz
4 = 575V/3Φ/60Hz
6 = 380V/3Φ/60Hz
8 = 208V/3Φ/60Hz
9 = 208V/1Φ/60Hz

4.1.2. RQ Model Options Breakdown (Continued)

	A1	A2	A3	A4	A5	
RQA-003-A-A-3 -	G	A	B	0	A	- 00000:01-0AG0K-E00-00000-00000-CA-0000-00-00-0-000-00-BA0B-00-000-A00000-C00000-000000B

Model Option A: Cooling Heat

A1: Compressor Style

0 = No Compressor
F = R-454B Two-Step Scroll Compressor
H = R-454B Variable Speed Scroll Compressor
G = R-454B Variable Capacity Compressor
K = R-454B Refrigerant Injection Variable Speed Compressor

A2: Condenser Style

0 = No Cooling
A = Standard Eff. Microchannel Air-Cooled Condenser
B = High Eff. Microchannel Air-Cooled Condenser
J = Alpha Class - Air-Source Heat Pump (A1=F or G) or Alpha Class - Cold Climate Air-Source Heat Pump (A1 = H or K)
K = Water-Source Heat Pump
P = DX Air Handling Unit - R-454B

A3: Indoor Coil Configuration

0 = No Cooling Coil
A = Standard Row Standard Eff. Evaporator
B = 6 Row Evaporator
E = 4 Row Chilled Water Coil
F = 6 Row Chilled Water Coil

A4: Cooling Heat Exchanger Construction

0 = Standard
A = Polymer E-Coated Cooling Coil
B = Stainless-Steel Cooling Coil Casing
D = Stainless-Steel Evap. Coil Casing + Polymer E-Coated Evap. Coil
E = Polymer E-Coated Cond. Coil
F = Stainless-Steel Cond. Coil Casing
J = Polymer E-Coat Evap. And Cond. Coil
T = Stainless-Steel Evap. Coil Casing + Polymer E-Coated Evap. And Cond. Coils

A5: Cooling Staging

0 = No Compressor
A = Variable Speed Comp (A1 = H)
A = Modulating (A1 = G)
F = Single Serpentine 8 FPI
G =Half Serpentine 8 FPI
K = Single Serpentine 12 FPI
L = Half Serpentine 12 FPI
M = DX Air Handler with 1 Refrigeration System
S = High Capacity - Low Ambient
1 = 1 Stage
2 = 2 Stage

4.1.3. RQ Model Options Breakdown (Continued)

		B1	B2	B3	B4	B5		
RQA-003-A- A -3-GAB0A	-	0	0	0	0	0	:	01-0AG0K-E00-00000-00000-CA-0000-00-00-0-000-00-BA0B-00-000-A00000-C00000-000000B

Model Option B: Heating

B1: Heating Type

0 = No Heating
A = Electric Heat
C = Natural Gas
F = LP Gas
J = Hot Water Coil
L = Steam Distributing Coil

B2: Heat Construction

0 = Standard
A = Aluminized Heat Exchanger
B = Stainless-Steel Heat Exchanger
C = High Altitude Aluminized Heat Exchanger
D = High Altitude Stainless-Steel Heat Exchanger
G = Polymer E-Coated Heating Coil

B3: Heat Designation

0 = No Heating
A = 1 Row
E = 2 Row
S = 4 Row
1 = Heat 1 - 7.5 kW (Voltage = 8 or 9)
1 = Heat 1 - 10 kW; 60 Mbtu
2 = Heat 2 - 15 kW (Voltage = 8 or 9)
2 = Heat 2 - 20 kW
3 = Heat 3 - 22.5 kW (Voltage = 8 or 9)
3 = Heat 3 - 30 kW; 100 Mbtu
4 = Heat 4 - 30 kW (Voltage = 8 or 9)
4 = Heat 4 - 40 kW
5 = Heat 5 - 140 Mbtu
7 = Heat 7 - 160 Mbtu

B4: Heating Staging

0 = No Heating
A = 1 Stage
B = 2 Stage
C = 3 Stage
D = 4 Stage
K = Modulating Gas Heat - Temperature Control
L = High Turndown Modulating Gas Heat - Temperature Control
M = Modulating SCR Electric with Potentiometer Control
N = Modulating SCR Electric - Temperature Control
N = Modulating SCR Electric with External 0-10 VDC (F16A = 0,A,M,N,P)
P = Single Serpentine 8 FPI
Q = Half Serpentine 8 FPI
T = Single Serpentine 12 FPI
U = Half Serpentine 12 FPI

B5: Heat Pump Auxiliary Heating

0 = No Auxiliary
A = Aux Heat 1 for Heat Pump 1 Stage
B = Aux Heat 2 for Heat Pump 1 Stage
C = Aux Heat 3 for Heat Pump 1 Stage
D = Aux Heat 4 for Heat Pump 1 Stage
K = Aux Heat 1 for Heat Pump 2 Stage
L = Aux Heat 2 for Heat Pump 2 Stage
M = Aux Heat 3 for Heat Pump 2 Stage
N = Aux Heat 4 for Heat Pump 2 Stage
U = Aux Heat 1 for Heat Pump 4 Stage
V = Aux Heat 2 for Heat Pump 4 Stage
W = Aux Heat 3 for Heat Pump 4 Stage
Y = Aux Heat 4 for Heat Pump 4 Stage

4.1.4. RQ Model Options Breakdown (Continued)

		1	2		3A	3B	3C	3D	3E		
RQA-003-A- A -3-GAB0A-00000	:	0	1	-	0	A	G	0	K	-	E00-00000-00000-CA-0000-00-00-0-000-00-BA0B-00-000-A00000-C00000-000000B

Feature 1: Unit Orientation

0 = Standard Access - Hinged Access Doors with Lockable Handles

Feature 2: Supply and Return Locations

0 = Bottom Discharge and Return
G = Horizontal Discharge and Return

Feature 3: Supply Fan Options

3A: Supply Fan Quantity

0 = 1 Fan

3B: Supply Fan Configuration

0 = No VFDs + Full Width Fan
A = 1 Fan per VFD + Full Width Fan
E = No VFDs + Narrow Width Fan
F = 1 Fan per VFD + Narrow Width Fan

3C: Supply Fan Size

C = 18.5" Direct Drive Backward Curved Aluminum
D = 18.5" Direct Drive Backward Curved Aluminum

3D: Supply Fan Motor Type

0 = High Efficiency Open Motor (1200 nominal rpm)
A = High Efficiency Open Motor (1800 nominal rpm)
C = Perm Magnet AC Open Motor (1200 nominal rpm)
D = Perm Magnet AC Open Motor (1800 nominal rpm)
F = ECM Motor (1200 nominal rpm)
G = ECM Motor (1800 nominal rpm)

3E: Supply Fan Motor Size

0 = 1/4 HP
B = 1/2 HP
C = 3/4 HP
D = 1 HP
F = 2 HP
Z = 1/6 HP

4.1.5. RQ Model Options Breakdown (Continued)

		4A	4B	4C		5A	5B	5C	5D	5E	
RQA-003-A- A -3-GAB0A-00000	-	E	0	0	-	0	0	0	0	0	- 00000-CA-0000-00-00-0-000-00-BA0B-00-000-A00000-C00000-000000B

Feature 4: Return Air/Outside Air Options

4A: Outside Air Section

0 = 100% Outside Air - No Return Air Opening
A = Motorized 100% Outside Air Dampers - No Return Air Opening
B = Manually Adjustable Outside Air Opening + Return Air Opening
C = Motorized Outside Air Dampers + Return Air Opening
D = 100% Return Air (No Outside Air Opening)
E = Economizer
G = Economizer + Power Exhaust
K = Economizer + Energy Recovery
Q = Economizer + Energy Recovery + Bypass Damper

4B: Energy Recovery Type

0 = No Energy Recovery
A = Polymer Energy Recovery Wheel
E = Plate Exchanger

4C: Energy Recovery Size

0 = No Energy Recovery
A = Total + Low CFM
B = Total + High CFM
E = Sensible + Low CFM
J = Total + Low CFM+ Exhaust Filters
K = Total + High CFM + Exhaust Filters
N = Sensible + Low CFM+ Exhaust Filters

Feature 5: Return Fan Option

5A: Return Fan Quantity

0 = No Return Fans

5B: Return Fan Configuration

0 = No Return Fans

5C: Return Fan Size

0 = No Return Fans

5D: Return Fan Motor Type

0 = No Return Fans

5E: Return Motor Size

0 = No Return Fans

4.1.6. RQ Model Options Breakdown (Continued)

		6A	6B	6C	6D	
RQA-003-A-A-3-GAB0A-00000-E00-00000	-	0	0	0	0	0-CA-0000-00-00-0-000-00-BA0B-00-000-A00000-C00000-000000B

Feature 6: Exhaust Fan Options

6A: Exhaust Fan Quantity

0 = No Exhaust Fan
A = 1 Fan

6B: Exhaust Fan Configuration

0 = No Exhaust Fan
A = No VFDs + Full Width Fan
B = 1 Fan per VFD + Full Width Fan
F = No VFD's + Narrow Width Fan
G = 1 Fan per VFD + Narrow Width Fan

6C: Exhaust Fan Size

0 = No Exhaust Fan
A = 16" Axial Fan
G = 10x8 Forward Curved Fan
H = 15" Backward Curved Plenum
K = 18.5" Backward Curved Plenum

6D: Exhaust Motor Fan Type

0 = No Exhaust Fan
A = High Efficiency Open Motor (1200 nominal rpm)
B = High Efficiency Open Motor (1800 nominal rpm)
C = High Efficiency Open Motor (3600 nominal rpm)
D = Perm Magnet AC Open Motor (1200 nominal rpm)
E = Perm Magnet AC Open Motor (1800 nominal rpm)
F = Perm Magnet AC Open Motor (3600 nominal rpm)
G = ECM Motor (1200 nominal rpm)
H = ECM Motor (1800 nominal rpm)
J = ECM Motor (3600 nominal rpm)
L = High Efficiency Totally Enclosed Motor (1200 nominal rpm)
M = High Efficiency Totally Enclosed Motor (1800 nominal rpm)
N = High Efficiency Totally Enclosed Motor (3600 nominal rpm)
P = Perm Magnet AC Totally Enclosed Motor (1200 nominal rpm)
Q = Perm Magnet AC Totally Enclosed Motor (1800 nominal rpm)
R = Perm Magnet AC Totally Enclosed Motor (3600 nominal rpm)

4.1.7. RQ Model Options Breakdown (Continued)

	6E		7		8		
RQA-003-A-A-3-GAB0A-00000-E00-00000-0000	**0**	**-**	**C**		**A**	**-**	0000-00-00-0-000-00-BA0B-00-000-A00000-C00000-000000B

6E: Exhaust Motor Size

0 = No Exhaust Fan
A = 1/4 HP
C = 1/2 HP
D = 3/4 HP
E = 1 HP
F = 1 1/2 HP
G = 2 HP

7: O/A Control

0 = Standard
C = Fully Modulating Actuator - Sensible Limit
D = Fully Modulating Actuator - Enthalpy Limit
E = DDC Actuator
P = CO_2 Override + Option C
Q = $C0_2$ Override + Option D
R = CO_2 Override + Option E
U = 2 Position Actuator
V = Fault Detection and Diagnostics Controller (FDD) Fully Modulating Actuator - Sensible Limit
W = FDD Fully Modulating Actuator - Enthalpy Limit
Y = Option V + CO_2 Override
Z = Option W + CO_2 Override

8: Return & Exhaust Options

0 = No Return Opening
A = Standard Return Opening without Exhaust Air Opening

4.1.8. RQ Model Options Breakdown (Continued)

	9A	9B	9C	9D	10A	10B		11A	11B		12	
RQA-003-A-A-3-GAB0A-00000-E00-00000-00000-	0	0	0	0	0	0	-	0	0	-	0	-000-00-BA0B-00-000-A00000-C00000-000000B

Feature 9: Filter Options

9A: Unit Filter Type

0 = 2" Pleated MERV 8
A = 4" Pleated MERV 8
B = 4" Pleated 65% Eff - MERV 11 + 2" Pleated MERV 8
C = 4" Pleated 85% Eff - MERV 13 + 2" Pleated MERV 8
B = 4" Pleated 95% Eff - MERV 14 + 2" Pleated MERV 8
H = 2" Permanent Filter Frame + Replaceable Media

9B: Unit Filter Box Size/Location

0 = Standard filters in Standard Position
B = High Efficiency Filters in Standard Position
M = Standard Filters in Standard Position + Lint Screen Prefilter

9C: Final Filter Type

0 = No Final Filter

9D: Filter Options

0 = None
A = Clogged Filter Switch - Unit Filters
B = Clogged Filter Switch - Unit + Energy Recovery Filters
E = Magnehelic Gauge - Unit Filters
F = Magnehelic Gauge - Unit + Energy Recovery Filters
J = Clogged Filter Switch + Magnehelic Gauge - Unit Filters
K = Clogged Filter Switch + Magnehelic Gauge - Unit + Energy Recovery Filters

Feature 10: Refrigeration Control

10A: Refrigeration Control A

0 = None
0 = Standard - Fixed 55°F Compressor Cooling Lock Out (F16B = 0)
0 = Standard - Adjustable Compressor Cooling Lock Out Through Unit Controls (F16B = A or N)
A = 5 Minute Compressor Off Timer and 20 Second Compressor Stage Delay
C = Adjustable Fan Cycling
D = Adjustable Compressor Lock Out
E = Freeze Stat
M = Option C + D
N = Option C + E
P = Options D + E
T = Option C + D + E

10B: Refrigeration Control B

0 = None

Feature 11: Refrigeration Options

11A: Refrigeration Options

0 = None
E = Modulating Hot Gas Reheat
Q = Polymer E-Coated Modulating Hot Gas Reheat

11B: Refrigeration Options B

0 = Standard Packaged Unit

4.1.9. RQ Model Options Breakdown (Continued)

		13A	13B	13C		
RQA-003-A- A -3-GAB0A -00000-E00-00000-00000-CA-0000-00-00	-	0	0	0	-	00-BA0B-00-000-A00000-C00000-000000B

12: Refrigeration Accessories

0 = None
A = Sight Glass
B = Compressor Isolation Valves
C = Options A + B
D = One Circuit 0° F Low Ambient
E = Option A + D
F = Option B + D
G = Option A + B + D

Feature 13: Power Options

13A: Unit Disconnect Type

0 = Single Point Power - Standard Power Block
A = Single Point Power - Non-Fused Disconnect Power Switch
B = Single Point Power - Circuit Breaker
C = Dual Point Power - Standard Power Block - Method #1
D = Dual Point Power - Non-fused Disconnect Power Switch - Method #1
E = Dual Point Power - Circuit Breaker - Method #1
F = Dual Point Power - Standard Power Block - Method #2
G = Dual Point Power - Non-fused Disconnect Power Switch - Method #2
H = Dual Point Power - Circuit Breaker - Method #2
J = Dual Point Power - Standard Power Block - Method #3
K = Dual Point Power - Non-fused Disconnect Power Switch - Method #3
L = Dual Point Power - Circuit Breaker - Method #3
M = Dual Point Power - Standard Power Block - Method #

13A: Unit Disconnect Type (Continued)

N = Dual Point Power - Non-fused Disconnect Power Switch - Method #4
P = Dual Point Power - Circuit Breaker - Method #4

13B: Disconnect 1 Size

0 = Power Block
A = 15 amps
B = 20 amps
C = 25 amps
D = 30 amps
E = 35 amps
F = 40 amps
G = 45 amps
H = 50 amps
J = 60 amps
K = 70 amps
L = 80 amps
M = 90 amps
N = 100 amps
P = 110 amps
Q = 125 amps
R = 150 amps
S = 175 amps
T = 200 amps
U = 225 amps
V = 250 amps
Z = 400 amps
3 = 600 amps

13C: Disconnect 2 Size

0 = Standard - None

4.1.10. RQ Model Options Breakdown (Continued)

		14	15		16A	16B	
RQA-003-A- A -3-GAB0A -00000-E00-00000-00000-CA-0000-00-00-000	-	0	0	-	B	A	0B-00-000-A00000-C00000-000000B

14: Safety Options

0 = None
C = Supply Air Smoke Detector
E = Remote Safety Shutdown Terminals
F = Return Air and Supply Air Firestat + Return Air Smoke Detector
G = Return Air and Supply Air Firestat + Supply Air Smoke Detector
J = Return Air and Supply Air Firestat + Option E
K = Return Air and Supply Air Smoke Detector
M = Return Air Smoke Detector + Option E
P = Option C + E
R = Return Air and Supply Air Fire Stat + Option K
T = Option F + E
V = Option G + E
Z = Option K + E
4 = Option R + E

15: Electrical Accessories

0 = None
A = Low Limit Control
B = Phase & Brown Out Protection
C = Cooling Coil UV Lights
E = Compressor Sound Blankets
F = Option A + B
G = Option A + C
J = Option A + E
K = Option B + C
M = Option B + E
P = Option C + E
R = Option A + B + C
T = Option A + B + E
V = Option A + C + E
Z = Option B + C + E

Feature 16: Unit Controls:

16A: Control Sequence:

0 = Standard Terminal Block For Thermostat
A = Terminal Block for Thermostat + Isolation Relays
B = Single Zone VAV Unit Controller - VAV Cool + CAV Heat
C = Single Zone VAV Unit Controller - VAV Cool + VAV Heat
D = VAV Unit Controller - VAV Cool + CAV Heat
E = Constant Air Volume Unit Controller - CAV Cool + CAV Heat
F = Makeup Air Unit Controller
G = Single Zone VAV Heat Pump Unit Controller - VAV Cool + VAV Heat
H = Constant Air Volume Heat Pump Unit Controller - CAV Cool + CAV Heat
J = Make up Air Heat Pump Unit Controller - CAV Cool + CAV Heat
N = Field Installed DDC Controls by Others + Isolation Relays
Q = DX-DOAS Controls
S = DX-DOAS Heat Pump Controls

16B: Control Supplier

0 = None
A = AAON Controls
N = Stratus Controls

4.1.11. RQ Model Options Breakdown (Continued)

	16C	16D		17A	17B		18A	18B	18C		19	
RQA-003-A- A -3-GAB0A -00000-E00-00000-00000-CA-0000-00-00-000-00-BA	0	B	-	0	0	-	0	0	0	-	A	00-000-C00000-000000B

16C: Control Supplier Options

0 = None

16D: BMS Connection & Diagnostics

0 = None
B = BACnet IP or MSTP

Feature 17: Preheat Options

17A: Preheat Configuration

0 = Standard - None
A = Modulating Electric Preheat - Outside Air

17B: Preheat Sizing

0 = Standard - None
1 = 10 kW (Voltage = 2,3,4)
1 = 7.5 kW (Voltage = 8,9)
A = 15 kW (Voltage = 2,3,4)
A = 11.3 kW (Voltage = 8,9)
B = 20 kW (Voltage = 2,3,4)
B = 15 kW (Voltage = 8,9)

Feature 18: Option Boxes

18A: Option Box Location

0 = None
5 = Empty Energy Recovery Wheel Option Box

18B: Option Box Sizes

0 = None
W = Empty Energy Recovery Wheel Option Box

18C: Box Accessories

0 = None

19: Outside Air Accessories

0 = No Outside Air Hood - 100% Return Air
A = Outside Air Hood
B = Outside Air Hood with Metal Mesh Filters
C = Option A + Outside Air Flow Measuring Station Size A
D = Option A + Outside Air Flow Measuring Station Size B
E = Option A + Outside Air Flow Measuring Station Size C
G = Option B + Outside Air Flow Measuring Station Size A
H = Option B + Outside Air Flow Measuring Station Size D
J = Option B + Outside Air Flow Measuring Station Size C
L = Option A + Thermal Dispersion Air Flow Measuring Station
M = Option B + Thermal Dispersion Air Flow Measuring Station

4.1.12. RQ Model Options Breakdown (Continued)

	20	21	22	23	24	25	
RQA-003-A- A -3-GAB0A -00000-E00-00000-00000-CA-0000-00-00-000-00-BA0B-00-000-A	0	0	0	0	0 -	C	00000-000000B

20: Cabinet Options

0 = None
A = Base Insulation
B = Supply Air & Return Air Burglar Bars
F = Option A + B

21: Accessories

0 = None

22: Maintenance Accessories

0 = None
A = Factory Wired 115V Convenience Outlet
B = Field Wired 115V Convenience Outlet
C = Control Panel LED Service Lights
D = Remote Start/Stop Contacts
E = Supply Fan Auxiliary Contacts
F = Option A + C
G = Option A + D
H = Option A + E
J = Option B + C
K = Option B + D
L = Option B + E
M = Option C + D
N = Option C + E
P = Option D + E
Q = Option A + C + D
R = Option A + C + E
S = Option A + D + E
T = Option B + C + D
U = Option B + C + E
V = Option B + D + E
W = Option C + D + E
Y = Option A + C + D + E
Z = Option B + C + D + E

23: Code Options

0 = Standard - ETL U.S.A. Listing
A = Chicago Code
B = ETL U.S.A. + Canada Listing

24: Shipping Splits

0 = Standard

25: Air Cooled Condenser Accessories:

0 = Standard
B = ECM Condenser Fan Multiple Speed
C = ECM Condenser Fan Head Pressure Control
G = Cond. Coil Screen + ECM Condenser Fan Head Pressure Control
H = Cond. Coil Screen + Low Sound Condenser Fan Head Pressure Control

4.1.13. RQ Model Options Breakdown (Continued)

	26	27	28	29	30		31	32	33	34	35	36	
RQA-003-A-A-3-GAB0A -00000-E00-00000-00000-CA-0000-00-00-000-00-BA0B-00-000-A0000-C	0	0	0	0	0	-	0	0	0	0	0	0	B

26: Evap-Cooled Condenser Accessories

0 = Standard

27: Water-Cooled Condenser Accessories

0 = None

28: Energy Recovery Wheel Accessories

0 = None
A = Energy Recovery Wheel Defrost - Start/Stop
B = Energy Recovery Wheel Rotation Detection
D = Powder Coated Energy Recovery Wheel Casing
F = Option A + B
H = Option A + D
L = Option B + D
S = Option A + B + D

29: VFD Options

0 = None
A = Shaft Grounding Kit on all SA, RA, EA motors

30: Miscellaneous Options

0 = Standard
A = Condensate Overflow Switch
B = SCCR (10 kA)
C = High Unit SCCR (35 kA)
D = High Unit SCCR (65 kA)
F = Option A + B
G = Option A + C
H = Option A + D

31: Blank

0 = Standard

32: Blank

0 = Standard

33: Blank

0 = Standard

34: Blank

0 = Standard

35: Warranty

0 = Standard - 2-Year Parts Warranty
B = 5-Year Parts Only Warranty
C = 10-Year Parts Only Warranty

36: Cabinet Material)

0 = Galvanized Cabinet - Double Wall + R-16 Foam Insulation

4.1.14. RQ Model Options Breakdown (Continued)

	37
RQA-003-A-A-3-GAB0A -00000-E00-00000-00000-CA-0000-00-00-000-00-BA0B-00-000-A0000-C00000-000000	**B**

37: Specials & Paint

B = Premium AAON Gray Paint Exterior Paint
C = Premium AAON Gray Paint Exterior Paint + Interior Corrosion Protection
E = Premium Gray Paint Exterior Paint + Shrink Wrap
F = Premium Gray Paint Exterior Paint + Interior Corrosion Protection + Shrink Wrap
H = Premium AAON Gray Paint Exterior + Interior Corrosion Protection + Powder Coated Fan Wheels
J = Premium AAON Gray Paint Exterior + Interior Corrosion Protection+ Powder Coated Fan Wheels + Shrink Wrap
K = SPA + Premium AAON Gray Paint Exterior + Interior Corrosion Protection + Powder Coated Fan Wheels
L = SPA + Premium AAON Gray Paint Exterior + Interior Corrosion Protection + Powder Coated Fan Wheels + Shrink Wrap
X = SPA + Premium AAON Gray Paint Exterior Paint
Y = SPA + Premium AAON Gray Paint Exterior Paint + Interior Corrosion Protection
1 = SPA + Premium AAON Gray Paint Exterior Paint + Shrink Wrap
2 = SPA + Premium AAON Gray Paint Exterior Paint + Interior Corrosion Protection + Shrink Wrap
4 = SPA + Special Exterior Paint Color
5 = SPA + Special Exterior Paint Color + Interior Corrosion Protection
7 = SPA + Special Exterior Paint Color + Shrink Wrap
8 = SPA + Special Exterior Paint Color + Interior Corrosion Protection + Shrink Wrap

5. GENERAL INFORMATION

RQ Series packaged rooftop units, heat pumps, and outdoor air handling units have been designed for outdoor installation only. Units are assembled, wired, charged, and run tested at the factory. RQ Series units are intended for installation up to 3500 meters (11,500 ft).

Startup and service must be performed by a Factory Train Service Technician.

WARNING

Improper installation, adjustment, alteration, service, or maintenance can cause property damage, personal injury, or loss of life.

CAUTION

These units must not be used for heating or cooling at any time during any phase of construction. Very low return air temperatures, harmful vapors, and misplacement of the filters will damage the unit and its efficiency.

5.1.1. Certification of Gas Heat Models

- AAON gas heat exchangers have successfully completed 10,000 burner operation cycles and corrosion resistance as specified per test standard ANSI 21.47. All gas heat exchangers used in AAON appliances are certified for use downstream of the evaporator or cooling coils.
- Certified as a Category III forced air furnace with or without cooling.
- Certified for outdoor installation only.
- Certified for installation on a combustible roof with a minimum of 30.5 cm (12”) high curb.

5.1.2. Certification of Steam or Hot Water Heat Models

- Certified as a forced air heating system with or without cooling.
- Certified for outdoor installation only.
- Certified for installation on a combustible roof with a minimum of 30.5 cm (12”) high curb.

5.1.3. Certification of Electric Heat Models

- Certified as an electric warm air furnace with or without cooling.
- Certified for outdoor installation only.
- Certified for installation on a combustible roof with a minimum of 30.5 cm (12”) high curb.

5.1.4. Certification of Cooling Models

- Certified as a commercial central air conditioner with or without electrically operated compressors.
- Certified for outdoor installation only.
- Certified for installation on a combustible roof with a minimum of 30.5 cm (12”) high curb.
- Certified with refrigerant R-454B coils or with chilled water-cooling coils.

5.1.5. Codes and Ordinances

RQ Series units have been tested and certified by ETL, in accordance with UL Safety Standard 60335-2-40 4th Edition/ CSA C22.2 No. 236, ANSI Safety Standard Z21.47b-2008/CSA 2.3b-2008, and ANSI Safety Standard Z83.8-2006/CSA 2.6-2006.

System must be sized in accordance with the American Society of Heating, Refrigeration, and Air Conditioning Engineers Handbook.

Installation of RQ Series units must conform to the ICC standards of the International Mechanical Code, the International Building Code, and local building, plumbing, and wastewater codes. In the absence of local codes, the installation must conform to the current (United States) National Fuel Gas Code ANSI-Z223.1/NFPA 54 or the current (Canada) National Fuel & Propane Installation Code CSA B149.1 or B149.2, and Mechanical Refrigeration Code CSA B52. All appliances must be electrically grounded in accordance with local codes, or in the absence of local codes, the current National Electric Code, ANSI/NFPA 70, or the current Canadian Electrical Code, CSA C22.1.

CAUTION

The Clean Air Act of 1990 bans the intentional venting of refrigerant as of July 1, 1992. Approved methods of recovery, recycling, or reclaiming must be followed.

CAUTION

Coils and sheet metal surfaces present sharp edges, and care must be taken when working with equipment.

CAUTION

Failure to observe the following instructions will result in premature failure of your system and possible voiding of the warranty.

5.1.6. Receiving Unit

When received, check the unit for damage that might have occurred in transit. If damage is found note it on the carrier's freight bill. A request for inspection by carrier's agent must be made in writing at once. Check the nameplate to ensure the correct model sizes and voltages have been received to match the job requirements.

If repairs must be made to damaged goods, notify the factory before any repair action is taken to protect the warranty. Certain equipment alterations, repairs, and manipulations of the equipment without the manufacturer's consent may void the product warranty. Contact the AAON Warranty Department for assistance with handling damaged goods, repairs, and freight claims: (918) 382-6450.

Note: Upon receipt check shipment for items that ship loose, such as filters and remote sensors. Consult order and shipment documentation to identify potential loose-shipped items. Loose-shipped items may have been placed inside the unit cabinet for security. Secure all doors with locks or nuts and bolts to prevent unauthorized access.

Figure 1: Lockable Handle

The warranty card must be completed in full and returned to AAON not more than 3 months after the unit is delivered.

5.1.7. Storage

If the installation will not occur immediately following the delivery, store the equipment in a dry, protected area away from construction traffic, and in the proper orientation as marked on the packaging, with all internal packaging in place. Secure all loose-shipped items. Refer to Table 11 for information on the minimum floor areas if the unit is stored in an unventilated space. Storage must comply with ASHRAE 15 requirements.

5.1.8. Wiring Diagrams

Unit-specific wiring diagrams are laminated and affixed inside the compressor and control compartment door.

5.2. Installation

AAON equipment has been designed for quick and easy installation.

5.2.1. Unit Location

The curb must be mounted first and must be located so that the duct connections will be clear of structural members of the building.

Verify that the rooftop or foundation can support the total unit weight, including accessory weights. If the unit is to be installed indoors or in areas without sufficient ventilation, provide venting from all pressure relief outlets to outdoors in accordance with ASHRAE 15 requirements.

WARNING

When locating gas fired units, the unit must be installed so that the flue discharge vents are located at least 305 cm (120 inches) away from any opening through which combustion products could enter the building.

WARNING

Distances from adjacent public walkways, adjacent buildings, operable windows, and building openings must conform to local codes and/or the National Fuel Gas Code, ANSI Z223.1/NFPA 54, or the National Gas & Propane Code, CSA B149.1

Do not position the flue opening to discharge into a fresh air intake of any other piece of equipment. The unit must also be installed so that the flow of the combustion intake air is not obstructed from reaching the furnace.

Vent opening must not be blocked by snow. A minimum 30.5 cm (12") curb must be used, or the vent outlet must be greater than 30.5 cm (12") off the ground or roof.

Flue gas is dangerously hot and contains contaminants. The user is responsible for determining if vent gases may degrade building materials.

The National Gas and Propane Installation Code, B149.1 specifies a 1.8 m (6 ft). horizontal vent terminal clearance to gas and electric meters and relief devices.

Local codes may supersede or further place restrictions on vent termination locations

Table 1: Unit Clearances

Location	Unit Size
	2-5 Tons
Front - (Heat Exchanger)	91.4 cm (36")
Back - (Outside Air)	91.4 cm (36")
Left Side	61 cm (24")
Right Side	122 cm (48")
Top	Unobstructed

Figure 2: RQ Series Orientation

5.2.2. Setting the Curb

Make openings in the roof decking large enough to allow for duct penetration and workspace only. Do not make openings larger than necessary. Set the curb to coincide with the openings. Make sure the curb is level. The unit must be level in both horizontal axes to support the unit and reduce noise and vibration.

CAUTION

All roofing work must be performed by competent roofing contractors to avoid any possible leakage.

CAUTION

Where the supply or warm air duct passes through a combustible roof, a clearance of 2.5 cm (1 inch) must be maintained between the outside edges of the duct and combustible material in accordance with National Fire Protection Association Standard No. 90A. Provide flashings or enclosures between the structure and the roof, and all joints must be sealed with mastic roofing to ensure a watertight seal.

Be careful to install the provided neoprene isolator according to Figure 3 prior to setting the unit to the curb.

CAUTION

A neoprene isolator for unit vibration isolation is provided in the cabinet and must be installed according to the installation manual.

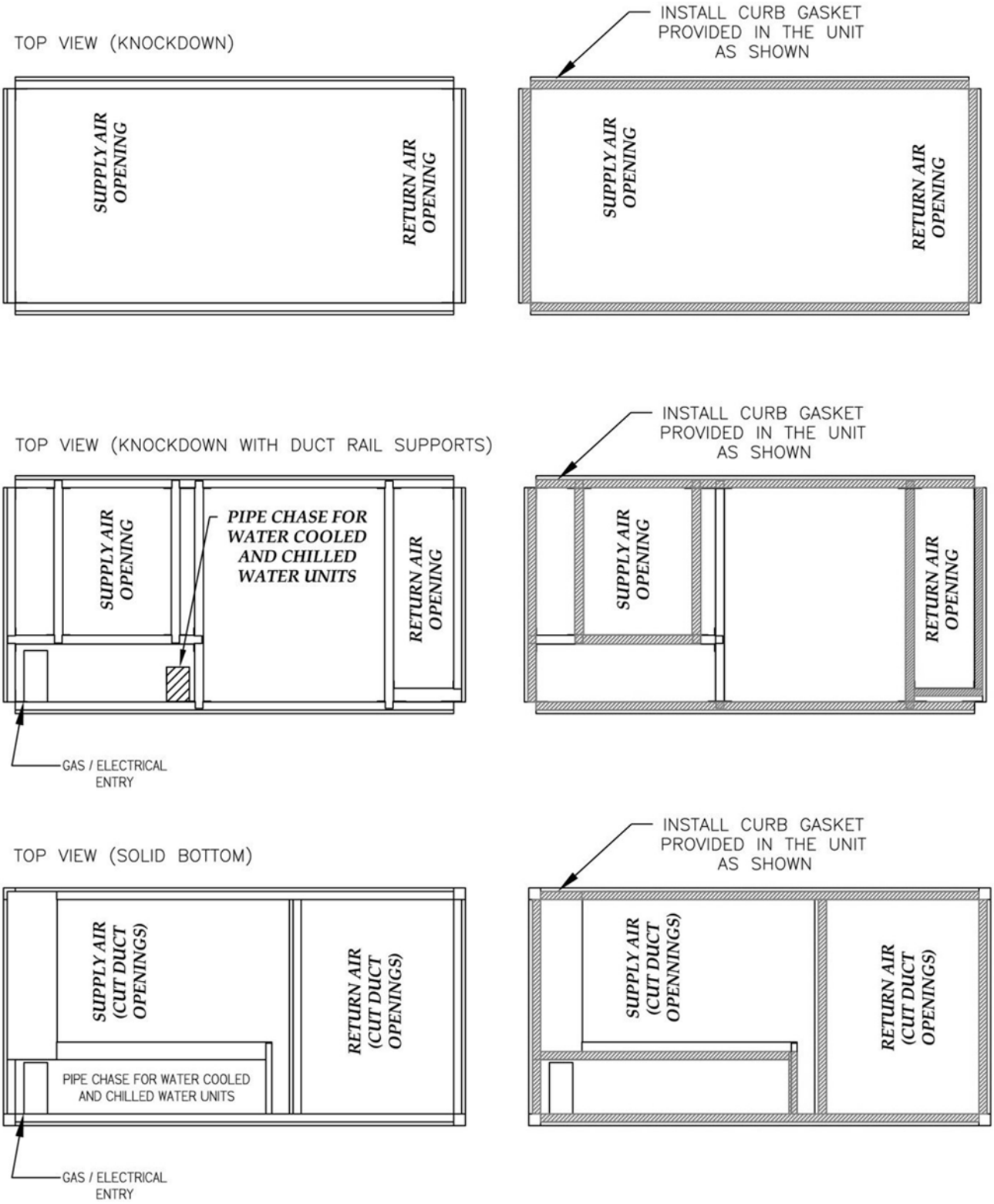

Figure 3: RQ Cabinet Standard and Power Exhaust Gasket Locations

CAUTION

Improper lifting can cause damage to the unit.

5.2.3. Forklifting the Unit

Units can be lifted using a forklift. Forks must be 122 cm (48") in length. Standard units can be lifted from all sides except the outside air side. Units with energy recovery wheels can only be forklifted from the left or right side.

Forks must be perpendicular to the unit. When lifting from either side, the forks must extend through to the opposite side of the unit. When lifting from the end of the unit, the forks must extend at least 112 cm (44") under the unit. When lifting with 122 (48") forks, the back of the fork must be no more than 4" from the unit.

CAUTION

Forklifting (2-5 Tons Units):
Forks or Fork Extensions must be at least 122 cm (48") in length and must extend 112 cm (44") under the unit.

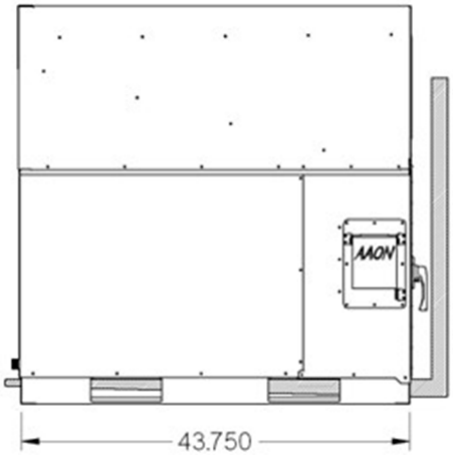

Figure 4: Forklifting an RQ Series Unit from the Side

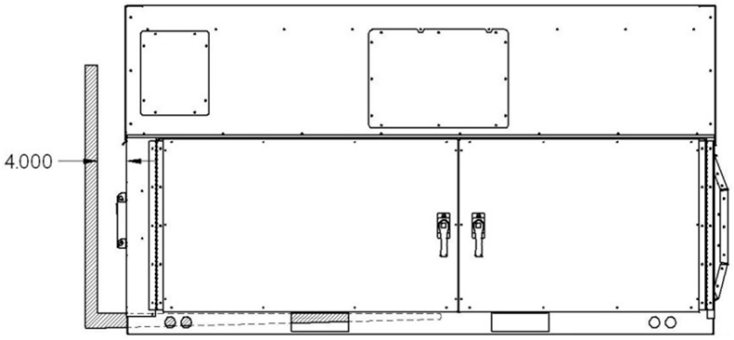

Figure 5: Forklifting an RQ Series Unit from the Top

5.2.4. Lifting the Unit

The RQ Series units must be lifted using the lifting points in the side base rails. A spreader bar must be used to prevent the lifting straps from damaging the unit. The connection points on the spreader bar must be 122 cm - 152 cm (48"-60") apart. The minimum cable length used to lift a standard length (208 cm [82"] base length) is 183 cm (72"). The minimum cable length to lift energy recovery units (295 cm [116"] base length) is 244 cm (96"). The shackles used to connect the cables to the lifting points in the base must be 1.3 cm (1/2") nominal size.

The rigging must be adjusted to lift the unit level. Lifting the unit off balance may cause severe damage.

It is recommended to lift the unit with the outside air hood in the downward shipping position. However, the unit may be lifted with the outside air hood in the open position.

Before lifting the unit, be sure that all shipping material has been removed from the unit. Secure hooks and cables at all lifting points provided on the unit.

Hoist the unit to a point directly above the curb and duct openings. Be sure that the gasket material has been applied to the curb.

Carefully lower and align the unit with utility and duct openings. Lower the unit until the unit skirt fits around the curb. Some units are designed to overhang the curb. Take care that any recessed base rails fit around the curb. Make sure that the unit is properly seated on the curb and is level.

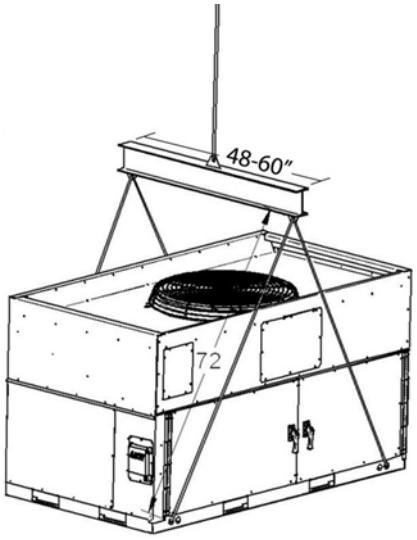

Figure 6: Lifting Details of a 2-5-ton Standard or Power Exhaust Unit

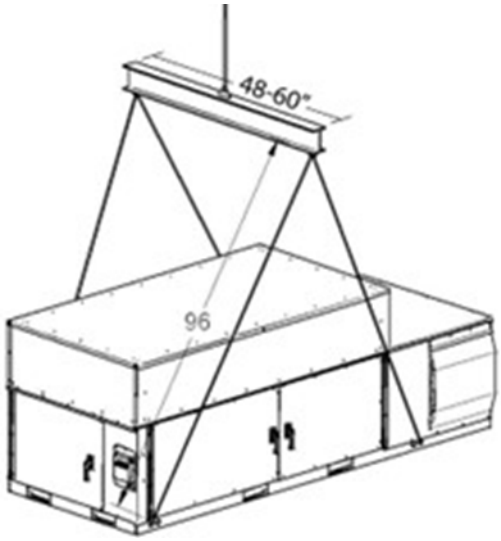

Figure 7: Lifting Details of a 2-5-ton Energy Recovery Wheel Unit

5.2.5. Vertical Duct Connection

Note: If the outside air will be in contact with the air tunnel base, the unit must include the base insulation option, or the base must be field insulated.

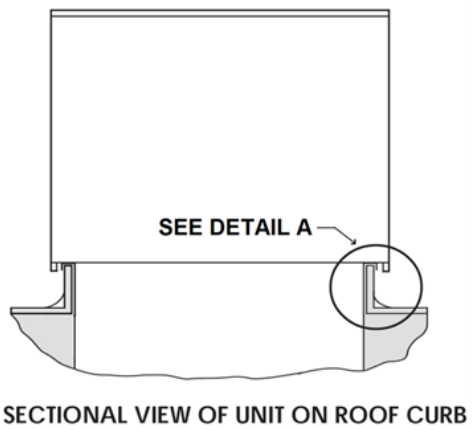

Figure 8: Sectional View of the Unit on Roof Curb

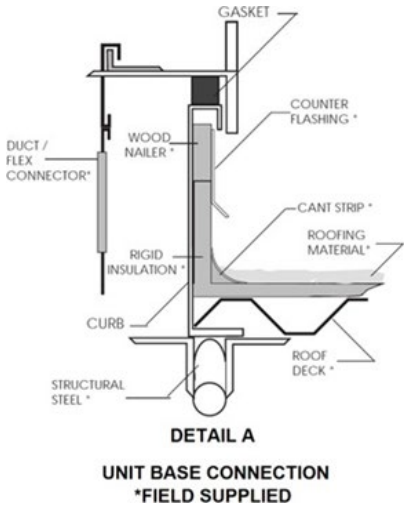

Figure 9: Unit Base Connection

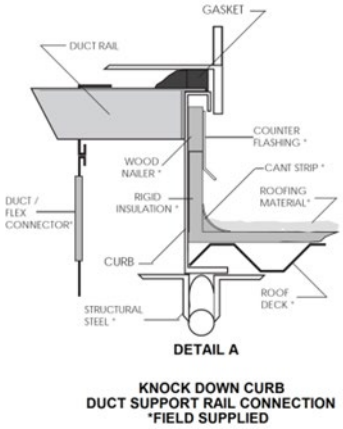

Figure 10: Knock Down Curb Duct Support Rail Connection

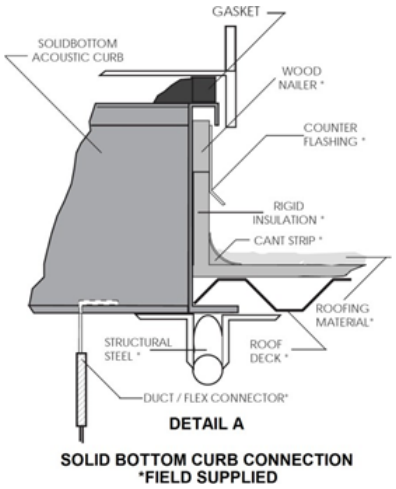

Figure 11: Solid Bottom Curb Connection

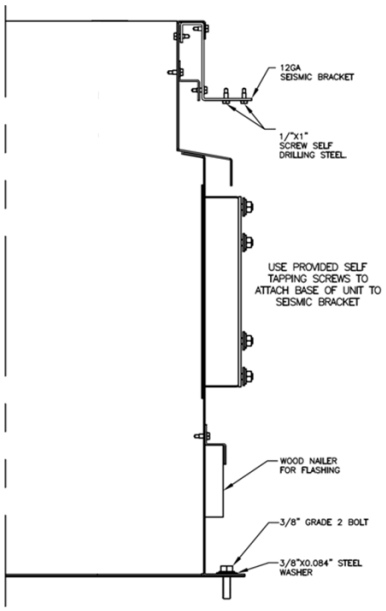

Figure 12: Solid Bottom Curb Connections

5.2.6. Seismic Curb Installation

Using a standard curb with a seismic unit will void the certification of the unit. All mounting details listed must be followed to achieve seismic certification. The AAON unit must be certified to ICC-ES AC156 when using a seismic curb for seismic certifications to apply. Any deviations or modifications to the unit or curb will void all seismic certification.

The structural engineer of record must approve building anchorage to the unit or curb in compliance with OSP-0180-10. Use the provided self-tapping screws to attach the base of the unit to the seismic curb bracket.

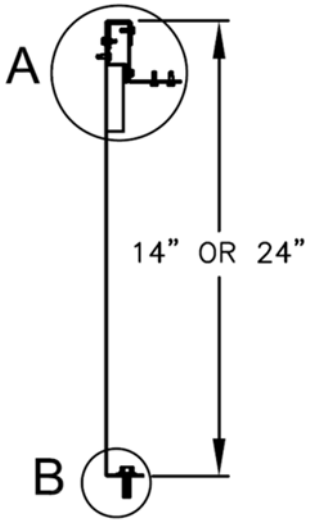

Figure 13: Seismic Solid Bottom Curb Without Filters, Cross Section

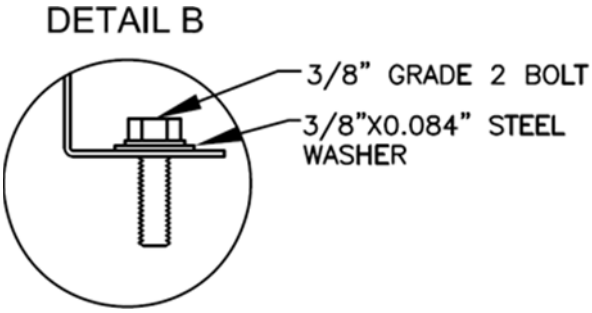

Figure 15: Seismic Solid Bottom Curb without Filters, Detail B

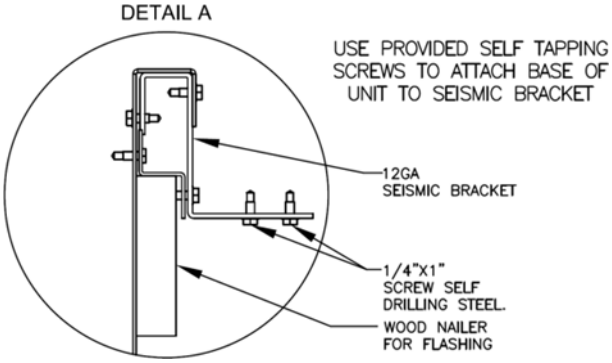

Figure 14: Seismic Solid Bottom Curb without Filters, Detail A

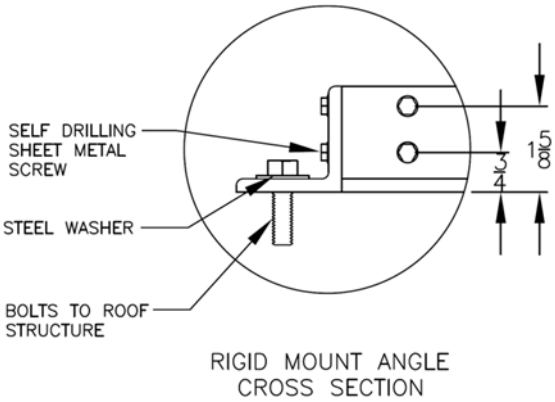

Figure 16: Seismic Rigid Mount Curb Cross Section

5.2.7. Horizontal Duction Connection

Note: If outside air will be in contact with the air tunnel base, the unit must include the base insulation option or the base must be field insulated.

Remove shipping covers and attach the duct to the flanges provided on the unit. The installer is responsible for sealing ducts to the flanges to prevent water leaks.

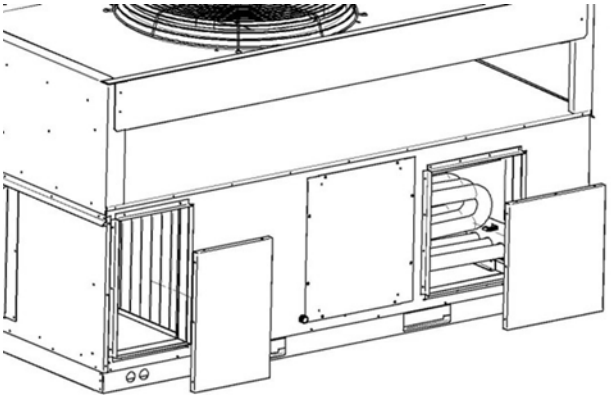

Figure 17: Horizontal Duct Connections

5.2.8. Outside Air Rain Hood

The rain hood must be opened before startup of the unit. Fresh air intake adjustments must be made according to building ventilation or local code requirements.

Remove the two screws at the bottom of the rain hood that secure it in the shipping position. Remove the screws that attach the side pieces of the hood to the top of the hood.

Rotate the side pieces so that the holes along one edge line up with the holes on the top piece and the flange is on the inside of the rain hood.

Attach the side pieces to the top of the hood using the provided screws and attached the side pieces to the end of the unit through the flange.

Apply silicon caulking along the top and both sides of the rain hood. Take care to seal the top corners where the rain hood attaches to the unit.

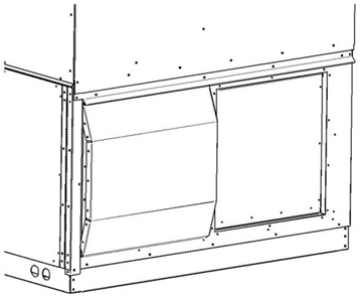

Figure 18: RQ Series Unit Closed Rain Hood

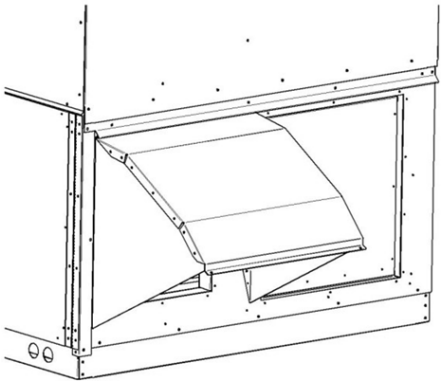

Figure 19: RQ Series Unit Open Rain Hood

5.2.9. Metal Mesh Makers

Metal mesh outside air filters require the installation of the filter rack on the intake of the rain hood. Clips that hold the metal mesh filters in the filter rack must face outward.

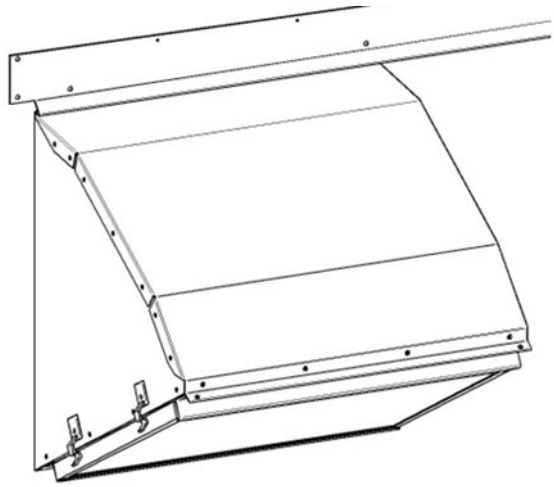

Figure 20: Rain Hood with Metal Mesh Filter Rack Installation

5.2.10. Electrical

For units not equipped with an incoming power disconnect, means for all pole disconnection must be provided in the fixed wiring in accordance with local or national electrical codes. Verify the unit nameplate agrees with the power supply.

Connect the power and control wiring to the unit as shown in Figure 22 and in the unit specific wiring diagram, which shows factory and field wiring and is attached to the inside of the door of the control compartment.

Table 2: Nameplate Voltage, Markings, and Tolerances

Hz	Nameplate Voltage	Nominal System Voltage	Operating Voltage Range		Acceptable Performance Range	
			Min	Max	Min	Max
60	115	120	104	127	108	126
	208/230	208/240	187	254	187	252
	208	208	187	228	187	228
	230	240	208	254	216	252
	265	277	240	293	249	291
	460	480	416	508	432	504
	575	600	520	635	540	630
50	230	230	198	254	208	254
	400	400	344	440	360	440

Notes:

1. Operating voltage is the minimum and maximum voltage for which the unit can function. Never operate outside of this min and max voltage.
2. The Acceptable Performance Range is the minimum and maximum voltage for which the unit performance is designed and rated to give acceptable performance.

WARNING

Electric shock hazard. Before attempting to perform any installation, service, or maintenance, shut off all electrical power to the unit at the disconnect switches. The unit may have multiple power supplies. Failure to disconnect power could result in dangerous operation, serious injury, death, or property damage.

Route the power and control wiring separately, through the utility entry on the base of the unit. Do not run power and control signal wires in the same conduit. The utility entry is located in the unit base in the front right-hand corner of the unit (compressor compartment). See the unit drawing for the specific location.

CAUTION

Electrical and gas entries into the unit must be properly sealed. Failure to seal the entries may result in damage to the unit and property.

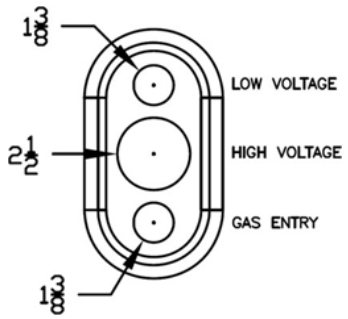

Figure 21: Unit Base Utility Entry

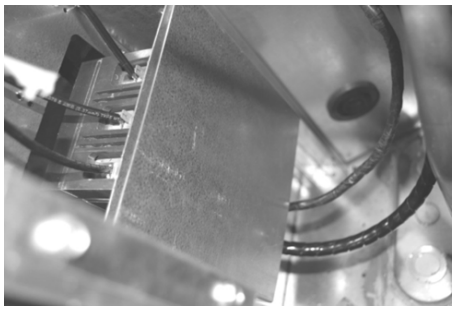

Figure 22: Back View of Power Switch from Control Compartment

Size supply conductors based on the unit MCA rating. Supply conductors must be rated a minimum of 75°C (167°F).

Protect the branch circuit in accordance with code requirements. The unit must be electrically grounded in accordance with local codes, or in the absence of local codes, the current National Electric Code, ANSI/NFPA 70, or the current Canadian Electrical Code, CSA C22.1.

Note: All units are factory wired for 208V, 230V, 380V, 460V, or 575V. The transformer configuration must be checked by a qualified technician prior to service, especially if the unit is to be connected to a 208V or 230V supply. For 208V service, interchange the yellow and red conductors on the low-voltage control transformer.

Red/Black (208V), Yellow/Black (230V) wire power leads to the unit's terminal block or main disconnect. All wiring beyond this point has been completed by the manufacturer and cannot be modified without affecting the unit's agency/safety certification.

Available short circuit current must not exceed the short circuit current rating (SCCR) shown on the unit nameplate.

CAUTION

Ensure that wires are protected from damage and wear caused by normal operation of the unit and environmental factors.

Three-phase voltage imbalances will cause motor overheating and premature failure. The maximum allowable imbalance is 2%.

Voltage imbalance is defined as 100 times the maximum deviation from the average voltage divided by the average voltage.

Example

$$\frac{221V + 230V + 227V}{3} = 226V$$

then we have

$$100 * \frac{226V - 221V}{226V} = 2.2\%$$

which exceeds the allowable imbalance

Figure 23: Voltage Imbalance Example

Check the voltage imbalance at the unit disconnect switch and at the compressor terminal. Contact your local power company for line voltage corrections.

It must be verified that the proper motor rotation and blower motor amperage listed on the motor nameplate are not exceeded. Motor overload protection may be a function of the variable frequency drive and must not be bypassed.

CAUTION

Rotation must be checked on all Motors and Compressors of three-phase units. The supply fan, exhaust fan, and condenser fan motors must all be checked by a qualified service technician at startup, and any wiring alteration must only be made at the unit's power connection.

Wire the control signals to the unit's low voltage terminal block located in the controls compartment.

CAUTION

Scroll compressors are directional and will be damaged by operation in the wrong direction. Low-pressure switches on compressors have been disconnected after factory testing. Rotation must be checked by a qualified service technician at startup using suction and discharge pressure gauges, and any wiring alteration must only be made at the unit's power connection.

Table 3: 35 KAIC Fuse Sizing

35 KAIC Construction		
Component	**Description**	**Interrupting Rating (kA)**
Fuse	Class CC, 600V, 0.5A - 30A	200
Fuse	Class J, 600V, 35A - 600A	200
Fuse	3P, 600V, 15A - 600A	35

Table 4: 65 KAIC Fuse Sizing

35 KAIC Construction		
Component	**Description**	**Interrupting Rating (kA)**
Fuse	Class CC, 600V, 0.5A - 30A	200
Fuse	Class J, 600V, 35A - 600A	200
Fuse	3P, 600V, 15A - 600A	65

5.2.11. Variable Speed Compressors

Variable speed compressors with an inverter drive are available on 2–5-ton units. Variable speed compressors must not be operated outside the factory-determined frequency range. The factory-determined compressor frequency range is given below in Table 5. For more information on the variable speed compressor, reference the RQ Series Variable Speed Compressor Supplement (V83980).

Table 5: Single-Circuited Variable Speed Compressor Frequency Range

Model (RQ)	Compressor Range (rpm)
A, B	900 - 5000 rpm

5.2.12. Variable Speed Refrigerant Injection Compressors

Variable speed compressors with an inverter drive are available on 3-4 ton units. Variable speed compressors must not be operated outside the factory-determined frequency range. The factory-determined compressor frequency range is given below in Table 5.1

Table 6: Single-Circuited Variable Speed Refrigerant Injection Compressor Frequency Range

Model (RQ)	Compressor Range (rpm)
A	900 - 7000 rpm

5.2.13. Thermostat Wiring

If a thermostat is used for unit control, locate the thermostat on an inside wall 1.2-1.5 meters (4-5 feet) above the floor, where it will not be subjected to drafts, sun exposure, or heat from electrical fixtures or appliances. Control wiring must deliver adequate voltage to components to ensure proper operation.

Control voltage returning from the controller circuit must be a minimum of 21 VAC. To ensure proper wiring, use the following chart to determine the allowable wiring distances.

Table 7: Control Wiring

Wire Size (Stranded) - Copper Conductors Only	Total Wire Distance Allowable	
20 AWG	60.96 m	20 AWG
18 AWG	106.7 m	18 AWG
16 AWG	152.4 m	16 AWG
14 AWG	228.6 m	14 AWG
12 AWG	381.0 m	12 AWG

Take the total wire distance allowable and divide by the number of wires to be connected. This indicates the distance allowable for that size wire. The wiring to the unit must not exceed the total wire distance allowable. If the voltage at the connectors is less than 21 VAC, isolation relays must be installed. If under external control, 21 VAC must be field verified.

All external devices must be powered via a separate external power supply.

Example:

A total of 8 wires must be pulled 75ft to control the unit. What size wire must be used?

According to Table 6, 16 AWG allows for 63ft (500 ft/8 wires) and 14 AWG allows for 94ft (750 ft/8 wires). Thus, 14 AWG must be used.

5.2.14. Condensate Drain Piping

2-5-ton units are equipped with one condensate drain pan connection on the left side of the unit. P-trap must be field provided and installed.

All drain connections must be used and individually trapped to ensure a minimum amount of condensate accumulation in the drain pans. ABS type cement must be used to join the drainpipe connections.

Note: The drain pan connections are 1.9 cm (3/4") MPT fittings.

Drainage of condensate directly onto the roof may be acceptable in certain areas; refer to local codes. If condensate is to drain directly onto the roof, a small drip pad must be placed below the drain to protect the roof from possible damage.

If condensate is piped into the building drainage system, the drainpipe must penetrate the roof externally to the unit itself. The drain line must be pitched away from the unit at least 1/8 inch per foot. On longer runs, an air break must be used to ensure proper drainage.

CAUTION

The unit must not be operated without a p-trap. Failure to install a p-trap may result in overflow of condensate water into the unit.

Draw-through cooling coils will have a negative static pressure in the drain pan area. This will cause an un-trapped drain to back up due to air being pulled up through the condensate drain piping.

Condensate drain trapping and piping must conform to all applicable governing codes.

5.3. Draw Through Coils

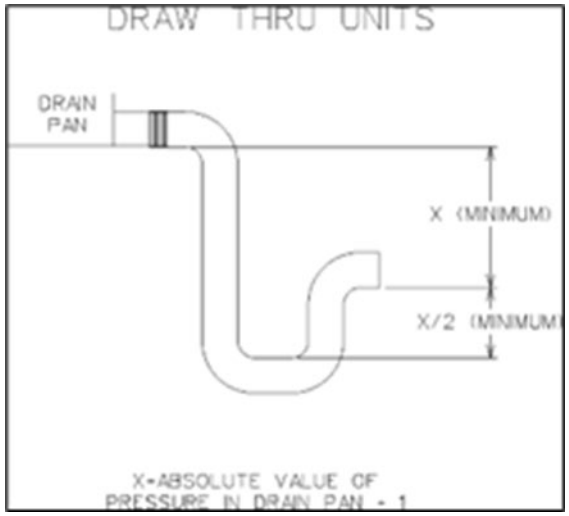

Figure 24: Draw Through Drain Trap

The X dimension on the draw-through trap must be at least equal to the absolute value of the negative static pressure in the drain pan plus one inch. To calculate the static pressure at the drain pan, add the pressure drops of all components upstream of the drain pan, including the cooling coil, and add the return duct static pressure. Include the dirt allowance pressure drop for the filters to account for the worst-case scenario.

The height from the top of the bottom bend of the trap to the bottom of the leaving pipe must be at least equal to one-half of the X dimension. This ensures that enough water is stored in the trap to prevent losing the drain seal during unit startup.

Note: The absolute value of the fan inlet pressure will always be greater than or equal to the absolute value of the static pressure in the drain pan on draw-through units, so the fan inlet pressure is a safe value to use for the drain pan static pressure.

Table 8: Draw Through Drain Trap Dimensions

Draw Through		
Drain Pan Pressure	Trap Dimension	
Negative Static	X	X/2
mmHg (inches of water)	mm (inch)	mm (inch)
-0.93 (-0.50)	38.1 (1.50)	19.1 (0.75)
-1.87 (-1.00)	50.8 (2.00)	25.4 (1.00)
-2.80 (-1.50)	63.5 (2.50)	31.8 (1.25)
-3.74 (-2.00)	76.2 (3.00)	38.1 (1.50)
-4.67 (-2.50)	88.9 (3.50)	44.5 (1.75)
-5.60 (-3.00)	101.6 (4.00)	50.8 (2.00)
-6.54 (-3.50)	114.3 (4.50)	57.2 (2.25)
-7.47 (-4.00)	127 (5.00)	63.5 (2.50)

Note: 1 mm = 0.1 cm

5.3.1. Non-Compressorized Liquid and Suction Line Piping

There are two different locations to pipe out of the unit: the post corner hole location and the post back hole location. The post corner hole location is to run pipe along the roof and then down by the disconnect switch (Figure 25 and Figure 27). The post back hole location is to run the pipe along the roof, back across the coil, and come out near the blower access panel (Figure 26 and Figure 28).

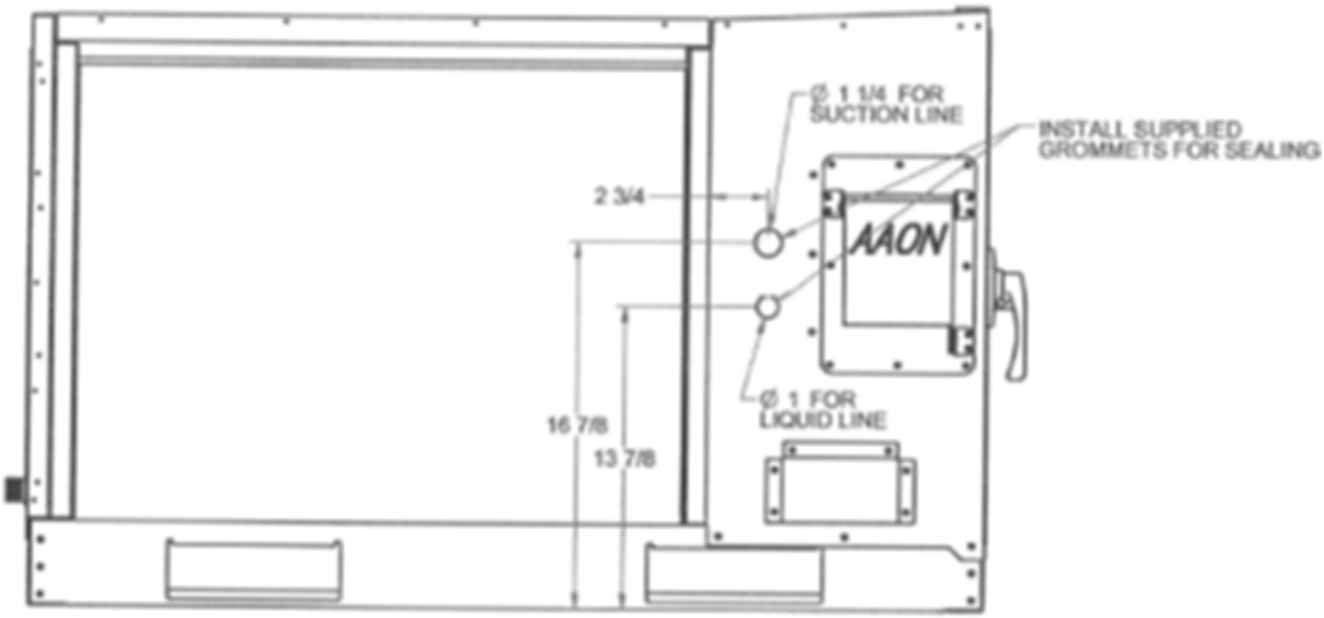

Figure 25: Post Corner Hole Location

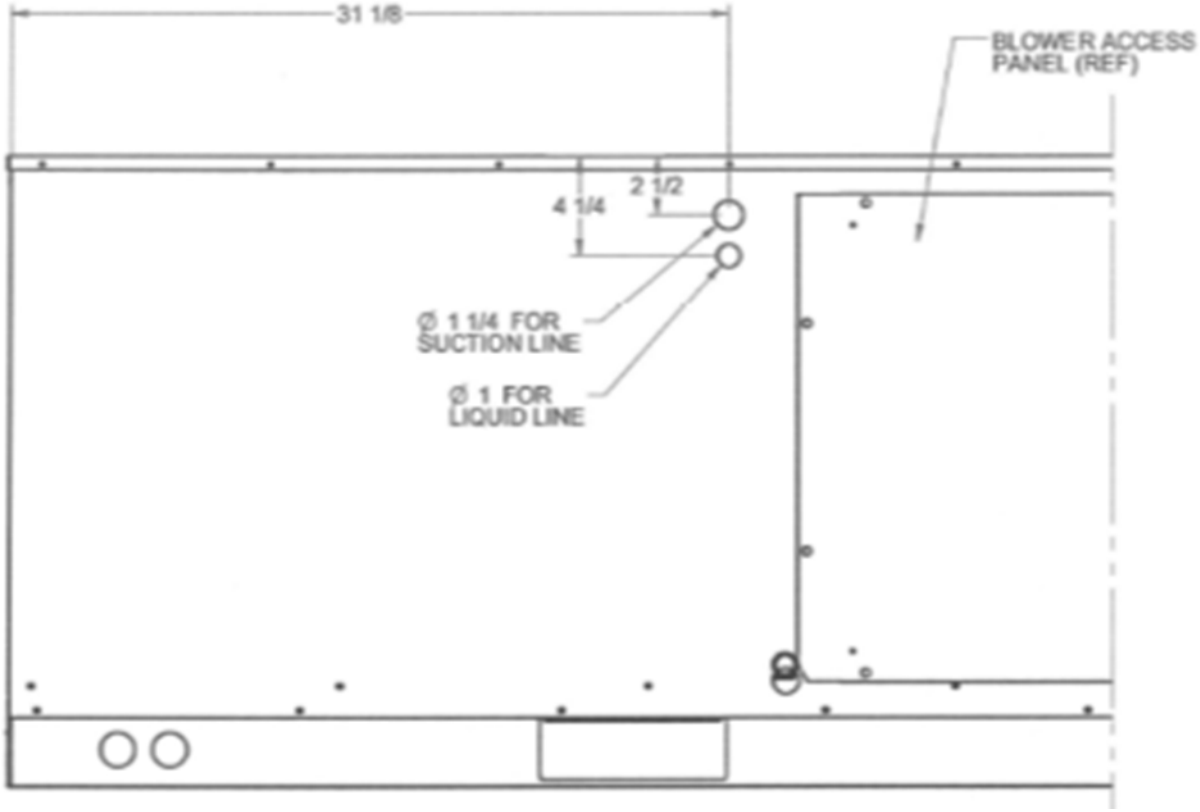

Figure 26: Post Back Hole Location

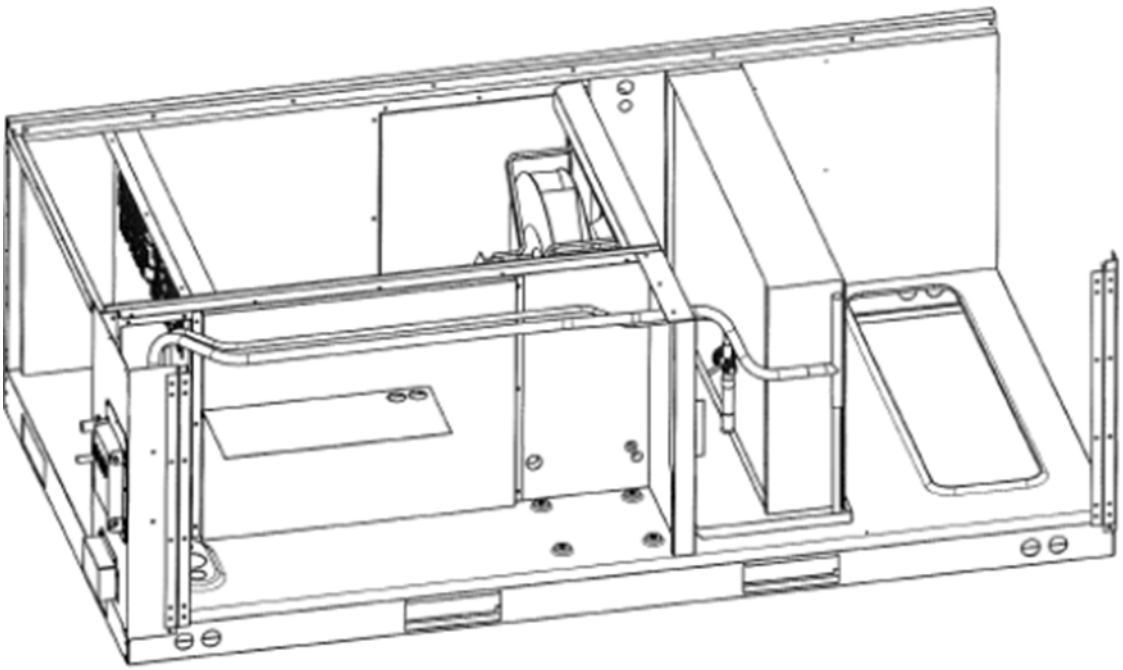

Figure 27: Post Corner Hole Piping

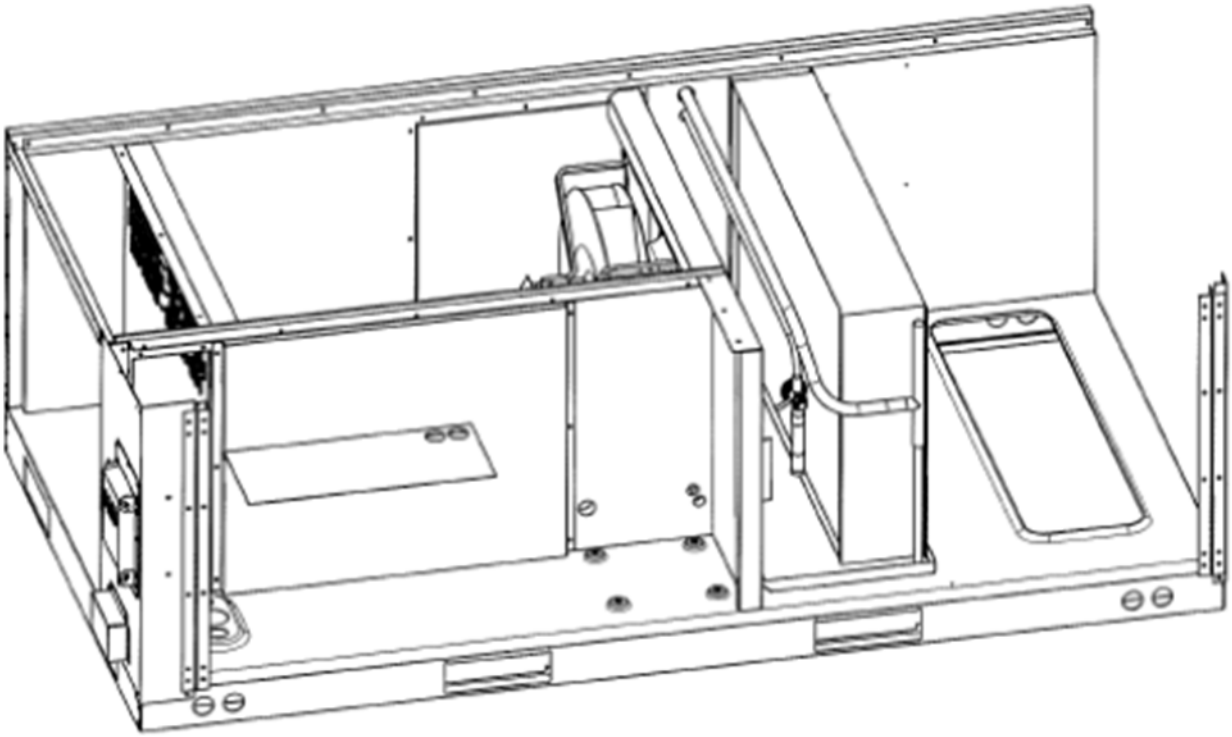

Figure 28: Post Back Hole Piping

5.4. Startup

Note: See the back of the manual for the startup form.

WARNING

Improper installation, adjustment, alteration, service, or maintenance can cause property damage, personal injury, or loss of life. Startup and service must be performed by a Factory Trained Service Technician.

WARNING

Electric shock hazard. Shut off all electrical power to the unit to avoid shock hazard or injury from rotating parts.

During startup, it is necessary to perform routine checks on the performance of the unit. This includes checking the air flow, air filters, condenser water flow, dampers, heaters, and refrigerant charge.

5.4.1. Filters

Do not operate the unit without filters in place. The unit must be checked for correct filter placement during startup. Operation of the equipment without filters will result in a clogged evaporator coil.

CAUTION

Before completing startup and leaving the unit, a complete operating cycle must be observed to verify that all components are functioning properly.

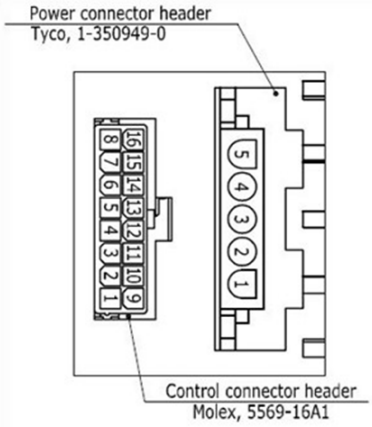

Pin No.	Power connector Description
1	Pin No. 1 & 2 Close : 115V
2	Pin No. 1 & 2 Open : 230V
3	G
4	N
5	L

Pin No.	Control connector Description
1	TRX-(RS485 Port)
2	N.C
3	RPM Out
4	GND
5	10V Output
6	N.C
7	GND
8	VSP, PWM Input
9	GND
10	TRX+(RS485 Port)
11	GND
12	N.C
13	C.W. / C.C.W.
14	N.C
15	Fault Out
16	GND

* Suggested mating connector
1) Power connector housing
: Tyco, 1-480763-0
2) Control connector housing
: Molex, 5557-16R

Figure 29: PIN Connectors on EC Supply Fan Motor Electronics

Filters (Continued)

Speed adjustment is made by varying the DC voltage on pin 8 (+) & 16 (-). If AAON Orion Control systems are installed on the system, then they will provide the 0-10VDC signal for speed control. The controller will be wired directly to pins 8 & 16. If a potentiometer is installed in the unit, the 10VDC output of the motor electronics will be wired through the potentiometer and then back into pins 8 & 16 for speed control. By adjusting the potentiometer from 0-100% you can manually adjust the speed of the motor.

If the rotation direction is wrong, check the brown wire on the control connector and ensure that it is connected from pin 13 to pin 11. Making/Breaking this wire changes the rotation of the motor.

If there is no rotation and/or no speed change, try the following:

1. Check the line-to-line voltage on the fuse block connected to the supply fan motor and ensure it is between 187VAC to 264VAC
2. Turn the potentiometer to 50%
3. Energize the BC relay by making a blower call.
4. Check DC voltage on S1 (-) and S2 (+), 0-10VDC signal on S1 & S2 sets the speed of the motor - thus 0VDC is no speed and 10VDC is full speed.
5. If DC Voltage is present on S1 & S2 then ensure that BC (blower relay) is energized and is passing the DC voltage through to the motor. If BC is not energized then check the wiring for the 24VAC blower call.
6. If no DC voltage is present on S1 & S2 then check S1 (-) & S3 (+), this is the +10VDC output from the motor that is supplied to the Potentiometer for speed control.

If the following troubleshooting suggestions do not solve the issue, contact AAON for assistance.

5.4.2. Adjusting Refrigerant Charge

Adjusting the charge of a system in the field must be based on the determination of liquid sub-cooling and evaporator superheat. On a system with a TXV liquid sub-cooling is more representative of the charge than evaporator superheat, but both measurements must be taken.

CAUTION

The Clean Air Act of 1990 bans the intentional venting of refrigerant (CFCs and HCFCs) as of July 1, 1992. Approved methods of recovery, recycling, or reclaiming must be followed. Fines and/or incarceration may be levied for non-compliance.

5.4.2.1. Before Charging

The unit being charged must be at or near full load conditions before adjusting the charge.

Units equipped with hot gas reheat must be charged with the hot gas reheat valves closed while the unit is in cooling mode to get the proper charge. After charging, the unit must be operated in reheat (dehumidification) mode to check for correct operation.

Units equipped with heat pump options must be charged in heating mode to get the proper charge. After charging, the unit must be operated in cooling mode to check for correct charge. The charge may need to be adjusted for the cooling mode. If adjustments are made in the cooling mode, the heating mode must be rerun to verify proper operation.

After adding or removing a charge, the system must be allowed to stabilize, typically 10-15 minutes, before making any other adjustments.

The type of unit and options determine the ranges for liquid sub-cooling and evaporator superheat. Refer to Table 8 and Table 9 when determining the proper sub-cooling.

5.4.3. Checking Liquid Sub-Cooling

Measure the temperature of the liquid line as it leaves the condenser coil.

Read the gauge pressure at the liquid line close to the point where the temperature was taken. You must use the liquid line pressure as it will vary from the discharge pressure due to the condenser coil pressure drop.

Convert the pressure obtained to a saturated temperature using the appropriate refrigerant temperature-pressure chart.

Subtract the measured liquid line temperature from the saturated temperature to determine the liquid sub-cooling.

Compare the calculated sub-cooling to Table 8 for the appropriate unit type and options.

5.4.4. Checking Liquid Sub-Cooling (Refrigerant Injection)

Heat Pump Mode - Measure the temperature of the liquid line as it leaves the condenser coil *before* it enters the liquid line brazeplate. Measuring after the refrigerant brazeplate in heating mode will result in increased sub-cooling value.

Cooling Mode- Measure the temperature of the liquid line as it leaves the condenser coil. In Cooling Mode, the refrigerant injection system will be inactive, but flow will continue through the refrigerant braze plate.

5.4.5. Checking Evaporator Superheat

Measure the temperature of the suction line close to the compressor. Read the gauge pressure at the suction line close to the compressor.

Convert the pressure obtained to a saturated temperature using the appropriate refrigerant temperature-pressure chart.

Subtract the saturated temperature from the measured suction line temperature to determine the evaporator superheat.

Compare the calculated superheat to the table below for the appropriate unit type and options.

5.4.6. Checking Refrigerant Injection Braze Plate Superheat - Heat Pump Mode

Refrigerant injection superheat will be listed within the Stratus Unit Manager. Access the Monitoring section of the Unit Manager Monitoring Cooling Details for the Refrigerant injection superheat measurement.

CAUTION

The thermal expansion valve must be adjusted to approximately 4.4-8.3°C (8-15°F) of suction superheat. Failure to have sufficient superheat will damage the compressor and void the warranty.

Table 9: Acceptable Refrigeration Circuit Values (Metric)

Air Cooled Cond/Air Source Heat Pump in Cooling Mode	
Sub-Cooling	4.4-8.3°C / 1.1-2.2°C (HP)*
Sub-Cooling with Hot Gas Reheat	4.4-8.3°C /1.1-3.3°C (HP)*
Superheat	**4.4-8.3°C**
Water-Cooled Cond./Water-Source Heat Pump in Cooling Mode	
Sub-Cooling	**2.2-4.4°C**
Superheat	**4.4-8.3°C**

Table 10: Acceptable Refrigeration Circuit Values (Imperial)

Air Cooled Cond/Air Source Heat Pump in Cooling Mode	
Sub-Cooling	8-15°F / 2-4°F (HP)*
Sub-Cooling with Hot Gas Reheat	8-15°F /2-6°F (HP)*
Superheat	**8-15°F**
Water-Cooled Cond./Water-Source Heat Pump in Cooling Mode	
Sub-Cooling	**4-8°F**
Superheat	**8-15°F**

Table 11: Minimum Floor Area per UL 60335 2-40 (LFL Basis)

Charge of Largest Circuit in kg (oz)	Minimum Airflow in m^3/h (CFM)	Minimum Room Area in $m^2(ft^2)$			
		1.8 m (6 ft) release height**	2.2 m (7.2 ft) release height	3 m (10 ft) release height	3.7 m (12 ft) release height
1.1 (40)					
1.6 (56)					
2.0 (72)	902 (531*)	8 (82)	6 (67)	5 (49)	4 (40)
2.5 (88)	902 (531*)	9 (101)	8 (82)	6 (60)	5 (49)
2.9 (104)	902 (531*)	11 (119)	9 (97)	7 (71)	5 (58)
3.4 (120)	902 (531*)	13 (137)	10 (112)	8 (82)	6 (67)
3.9 (136)	902 (531*)	14 (156)	12 (127)	9 (93)	7 (76)
4.3 (152)	902 (531*)	16 (174)	13 (142)	10 (104)	8 (85)
4.8 (168)	902 (531*)	18 (192)	15 (157)	11 (115)	9 (94)
5.2 (184)	902 (531*)	20 (211)	16 (172)	12 (126)	10 (103)
5.7 (200)	902 (531*)	21 (229)	17 (187)	13 (137)	10 (111)
6.1 (216)	902 (531*)	23 (247)	19 (202)	14 (148)	11 (120)
6.6 (232)	902 (531*)	25 (266)	20 (217)	15 (159)	12 (129)
7.0 (248)	902 (531*)	26 (284)	22 (232)	16 (170)	13 (138)
7.5 (264)	902 (531*)	28 (302)	23 (247)	17 (181)	14 (147)
7.9 (280)	902 (531*)	30 (321)	24 (262)	18 (192)	14 (156)
8.4 (296)	902 (531*)	31 (339)	26 (277)	19 (203)	15 (165)
8.8 (312)	902 (531*)	33 (357)	27 (292)	20 (214)	16 (174)
9.3 (328)	942 (555§)	35 (376)	29 (307)	21 (225)	17 (183)
9.8 (344)	988 (582§)	37 (394)	30 (322)	22 (236)	18 (192)
10.2 (360)	1034 (609)	38 (412)	31 (337)	23 (247)	19 (201)
10.7 (376)	1080 (636)	40 (431)	33 (352)	24 (258)	19 (210)
11.1 (392)	1126 (663)	42 (449)	34 (367)	25 (269)	20 (218)
11.6 (408)	1172 (690)	43 (467)	36 (382)	26 (280)	21 (227)
12.0 (424)	1218 (717)	45 (486)	37 (397)	27 (291)	22 (236)
12.5 (440)	1264 (744)	47 (504)	38 (412)	28 (302)	23 (245)
12.9 (456)	1310 (771)	49 (522)	40 (427)	29 (313)	24 (254)
13.4 (472)	1356 (798)	50 (541)	41 (442)	30 (324)	24 (263)
13.8 (488)	1402 (825)	52 (559)	42 (457)	31 (335)	25 (272)
14.3 (504)	1448 (852)	54 (577)	44 (472)	32 (346)	26 (281)
14.7 (520)	1494 (879)	55 (596)	45 (487)	33 (357)	27 (290)
15.2 (536)	1540 (906)	57 (614)	47 (502)	34 (368)	28 (299)
15.6 (552)	1586 (934)	59 (632)	48 (517)	35 (379)	29 (308)
16.1 (568)	1632 (961)	60 (651)	49 (532)	36 (390)	29 (317)
16.6 (584)	1678 (988)	62 (669)	51 (547)	37 (401)	30 (325)
17.5 (616)	1770 (1042)	66 (706)	54 (577)	39 (423)	32 (343)
17.9 (632)	1816 (1069)	67 (724)	55 (592)	40 (434)	33 (352)

Table 12: Minimum Floor Area per UL 60335 2-40 (LFL Basis) Continued

Charge of Largest Circuit in kg (oz)	Minimum Airflow in m^3/h (CFM)	Minimum Room Area in $m^2(ft^2)$			
		1.8 m (6 ft) release height**	2.2 m (7.2 ft) release height	3 m (10 ft) release height	3.7 m (12 ft) release height
18.4 (648)	1862 (1096)	69 (742)	56 (607)	41 (445)	34 (361)
18.8 (664)	1908 (1123)	71 (761)	58 (622)	42 (456)	34 (370)
19.3 (680)	1954 (1150)	72 (779)	59 (637)	43 (467)	35 (379)
19.7 (696)	2000 (1177)	74 (797)	61 (652)	44 (478)	36 (388)
20.2 (712)	2046 (1204)	76 (816)	62 (667)	45 (489)	37 (397)
20.6 (728)	2092 (1231)	77 (834)	63 (682)	46 (500)	38 (406)
21.1 (744)	2138 (1258)	79 (852)	65 (697)	48 (511)	39 (415)
21.5 (760)	2184 (1285)	81 (871)	66 (712)	49 (522)	39 (424)
22.0 (776)	2230 (1312)	83 (889)	68 (727)	50 (533)	40 (432)
22.5 (792)	2276 (1339)	84 (907)	69 (742)	51 (544)	41 (441)
22.7 (800)	2299 (1353)	85 (916)	70 (750)	51 (550)	41 (446)

Note: * Minimum airflow for RQ Series

§ Minimum circulation airflow for non-ducted applications is 1028 m^3/hr (605 CFM)

**Minimum installed height of unit/point of refrigerant release is 1.8 m (6 ft). Installations below this height must be provided with additional ventilation means in accordance with ASHRAE 15.

In lieu of local codes, adjust minimum floor area by multiplying the required minimum floor area from Table 10 and 11 by the Adjustment Factor for the local elevation from Table 12 below.

Table 13: Adjustment for Local Elevation

Altitude m (ft)	0	200 (650)	400 (1300)	600 (1950)	800 (2600)	1000 (3250)	1200 (3900)	1400 (4600)	1600 (5250)
Adjustment Factor	1.00	1.02	1.03	1.05	1.07	1.09	1.11	1.13	1.15
Altitude m (ft)	1800 (5900)	2000 (6550)	2200 (7200)	2400 (7850)	2600 (8500)	2800 (9150)	3000 (9800)	3200 (10500)	
Adjustment Factor	1.17	1.19	1.21	1.24	1.26	1.29	1.31	1.34	

Table 14: Acceptable Microchannel Air-Cooled Condenser Coil Liquid Sub-Cooling Values (Metric)

Ambient (°C)	Cooling Mode Liquid Sub-Cooling Values (°C)				
	Evaporator Coil Saturation Temperature (°C)				
	4.4	7.2	8.9	10.0	12.8
19.4	5.0 - 7.8	4.4 - 7.2	4.4 - 7.2	3.9 - 6.7	2.8 - 5.6
22.2	5.6 - 8.3	5.0 - 7.8	5.0 - 7.8	4.4 - 7.2	3.9 - 6.7
27.8	5.6 - 8.3	5.6 - 8.3	5.6 - 8.3	5.0 - 7.8	3.9 - 6.7
35.0	5.6 - 8.3	5.6 - 8.3	5.6 - 8.3	5.0 - 7.8	4.4 - 7.2
40.6	6.1 - 8.9	6.1 - 8.9	5.6 - 8.3	5.6 - 8.3	4.4 - 7.2

Table 15: Acceptable Microchannel Air-Cooled Condenser Coil Liquid Sub-Cooling Values (Imperial)

Ambient (°F)	Cooling Mode Liquid Sub-Cooling Values (°F)				
	Evaporator Coil Saturation Temperature (°F)				
	v	45	48	50	55
67	9 - 14	8 - 13	8 - 13	7 - 12	5 - 10
72	10 - 15	9 - 14	9 - 14	8 - 13	7 - 12
82	10 - 15	10 - 15	10 - 15	9 - 14	7 - 12
95	10 - 15	10 - 15	10 - 15	9 - 14	8 - 13
105	11 - 16	11 - 16	10 - 15	10 - 15	8 - 13

Note:

1. Microchannel condenser coils are more sensitive to charge. The system must be running in cooling mode with the compressor, supply airflow & condenser fan speed at full load. The sub-cooling value changes depending on the ambient temperature reading and the microchannel evaporator coil saturation temperature. To find the correct sub-cooling value, find the ambient temperature on the first column and follow that across to the SST (4.4-12.8°C [40-55°F]).
2. Superheat for Microchannel condenser coils must be between 4.4 and 8.3°C (8 - 15°F).

5.4.7. Adjusting Sub-cooling and Superheat Temperatures

The system is overcharged if the sub-cooling temperature is too high and the evaporator is fully loaded (low loads on the evaporator result in increased sub-cooling), and the evaporator superheat is within the temperature range as shown in the table above (high superheat results in increased sub-cooling).

Correct an overcharged system by reducing the amount of refrigerant in the system to lower the sub-cooling.

The system is undercharged if the superheat is too high and the sub-cooling is too low.

Correct an undercharged system by adding refrigerant to the system to reduce superheat and raise sub-cooling.

If the sub-cooling is correct and the superheat is too high, the TXV may need adjustment to correct the superheat.

WARNING

Ensure that there are no live electrical components or wiring exposed when adjusting charge, recovering charge, or purging the system. Ensure that earthing continuity is unbroken.

Table 16: R-454B Refrigerant Temperature-Pressure Chart (Metric)

°C	KPA	°C	KPA	°C	KPA	°C	KPA	°C	KPA
-6.7	484.5	**8.3**	843.3	**23.3**	1348.0	**38.3**	2034.6	**53.3**	2946.9
-6.1	495.6	**8.9**	859.3	**23.9**	1370.0	**38.9**	2064.1	**53.9**	2985.7
-5.6	506.9	**9.4**	875.3	**24.4**	1392.2	**39.4**	2093.9	**54.4**	3024.9
-5.0	518.2	**10.0**	891.6	**25.0**	1414.6	**40.0**	2123.9	**55.0**	3064.5
-4.4	529.7	**10.6**	908.1	**25.6**	1437.3	**40.6**	2154.3	**55.6**	3104.5
-3.9	541.5	**11.1**	924.8	**26.1**	1460.3	**41.1**	2185.0	**56.1**	3144.9
-3.3	553.3	**11.7**	941.7	**26.7**	1483.5	**41.7**	2216.1	**56.7**	3185.8
-2.8	565.4	**12.2**	958.8	**27.2**	1507.0	**42.2**	2247.4	**57.2**	3227.0
-2.2	577.6	**12.8**	976.2	**27.8**	1530.8	**42.8**	2279.1	**57.8**	3268.6
-1.7	589.9	**13.3**	993.7	**28.3**	1554.8	**43.3**	2311.1	**58.3**	3310.7
-1.1	602.5	**13.9**	1011.5	**28.9**	1579.0	**43.9**	2343.5	**58.9**	3353.2
-0.6	615.2	**14.4**	1029.4	**29.4**	1603.6	**44.4**	2376.2	**59.4**	3396.1
0.0	628.1	**15.0**	1047.6	**30.0**	1628.4	**45.0**	2409.2	**60.0**	3439.5
0.6	641.2	**15.6**	1066.0	**30.6**	1653.5	**45.6**	2442.6	**60.6**	3483.3
1.1	654.4	**16.1**	1084.7	**31.1**	1678.8	**46.1**	2476.2	**61.1**	3527.6
1.7	667.8	**16.7**	1103.5	**31.7**	1704.4	**46.7**	2510.3	**61.7**	3572.3
2.2	681.4	**17.2**	1122.6	**32.2**	1730.4	**47.2**	2544.7	**62.2**	3617.4
2.8	695.2	**17.8**	1141.9	**32.8**	1756.6	**47.8**	2579.4	**62.8**	3663.0
3.3	709.2	**18.3**	1161.5	**33.3**	1783.0	**48.3**	2614.5	**63.3**	3709.2
3.9	723.3	**18.9**	1181.3	**33.9**	1809.9	**48.9**	2650.0	**63.9**	3755.7
4.4	737.6	**19.4**	1201.3	**34.4**	1836.9	**49.4**	2685.7	**64.4**	3802.7
5.0	752.2	**20.0**	1221.5	**35.0**	1864.3	**50.0**	2721.9	**65.0**	3850.3
5.6	766.9	**20.6**	1242.0	**35.6**	1891.9	**50.6**	2758.5	**65.6**	3898.4
6.1	781.8	**21.1**	1262.8	**36.1**	1919.8	**51.1**	2795.4		
6.7	796.9	**21.7**	1283.7	**36.7**	1948.1	**51.7**	2832.7		
7.2	812.2	**22.2**	1304.9	**37.2**	1976.7	**52.2**	2870.4		
7.8	827.7	**22.8**	1326.3	**37.8**	2005.5	**52.8**	2908.4		

Table 17: R-454B Refrigerant Temperature-Pressure Chart (Imperial)

°F	PSIG	°F	PSIG	°F	PSIG	°F	PSIG	°F	PSIG
20	70.3	**47**	122.3	**74**	195.5	**101**	295.1	**128**	427.4
21	71.9	**48**	124.6	**75**	198.7	**102**	299.4	**129**	433.0
22	73.5	**49**	127.0	**76**	201.9	**103**	303.7	**130**	438.7
23	75.2	**50**	129.3	**77**	205.2	**104**	308.0	**131**	444.5
24	76.8	**51**	131.7	**78**	208.5	**105**	312.5	**132**	450.3
25	78.5	**52**	134.1	**79**	211.8	**106**	316.9	**133**	456.1
26	80.3	**53**	136.6	**80**	215.2	**107**	321.4	**134**	462.0
27	82.0	**54**	139.1	**81**	218.6	**108**	326.0	**135**	468.0
28	83.8	**55**	141.6	**82**	222.0	**109**	330.6	**136**	474.1
29	85.6	**56**	144.1	**83**	225.5	**110**	335.2	**137**	480.2
30	87.4	**57**	146.7	**84**	229.0	**111**	339.9	**138**	486.3
31	89.2	**58**	149.3	**85**	232.6	**112**	344.6	**139**	492.6
32	91.1	**59**	151.9	**86**	236.2	**113**	349.4	**140**	498.8
33	93.0	**60**	154.6	**87**	239.8	**114**	354.3	**141**	505.2
34	94.9	**61**	157.3	**88**	243.5	**115**	359.1	**142**	511.6
35	96.9	**62**	160.1	**89**	247.2	**116**	364.1	**143**	518.1
36	98.8	**63**	162.8	**90**	251.0	**117**	369.1	**144**	524.6
37	100.8	**64**	165.6	**91**	254.8	**118**	374.1	**145**	531.3
38	102.9	**65**	168.5	**92**	258.6	**119**	379.2	**146**	538.0
39	104.9	**66**	171.3	**93**	262.5	**120**	384.3	**147**	544.7
40	107.0	**67**	174.2	**94**	266.4	**121**	389.5	**148**	551.5
41	109.1	**68**	177.2	**95**	270.4	**122**	394.8	**149**	558.4
42	111.2	**69**	180.1	**96**	274.4	**123**	400.1	**150**	565.4
43	113.4	**70**	183.1	**97**	278.4	**124**	405.4		
44	115.6	**71**	186.2	**98**	282.5	**125**	410.8		
45	117.8	**72**	189.3	**99**	286.7	**126**	416.3		
46	120.0	**73**	192.4	**100**	290.9	**127**	421.8		

CAUTION

Do Not Overcharge:
Refrigerant overcharging leads to excess refrigerant in the condenser coils, resulting in elevated compressor discharge pressure. The maximum allowable is 24 kg (850 oz).

5.4.8. Freeze Stat Startup

Freeze Stat is an adjustable temperature sensor (-23.3°C to 21.1°C [-10 to 70°F]) mounted on the tubing of the first cooling circuit and wired to deenergize all cooling circuits if tubing temperature falls below the setpoint. This option is used to prevent freezing of the evaporator coil.

Recommended Setting: 0°C to 1.7°C (32° F to 35° F).

5.4.9. Condenser Fan EC Motor Startup

The fan cycling option uses a fan cycle switch to switch between one of the discrete speed inputs (see Table 17) on the motor; therefore, it cycles between two preset speeds based upon the discharge pressure of the unit. By connecting 24VAC to a single or combination of the yellow, white, or orange wires, the motor will run at the discrete speeds in Table 17.

The AAON Condenser Head Pressure Module is used for variable speed control of the motor to maintain a head pressure. The motor must be factory wired to the PWM outputs of the AAON Condenser Head Pressure Module. See AAON literature for further information (www.aaon.com/Controls.)

Note: High voltage wires out of the motor: Black & Brown - 1 Phase Line Voltage Green - Ground

Low control voltage wires out of the motor: Blue - Common

Yellow - Variable Speed Control

Table 18: EC Condenser Fan Cycling Options

Color	Terminal	Customer Connection	Option 1	Option 2	Option 3	Option 4	Option 5
Black	0.50 BWS	L1	208-230 VAC	208-230 VAC	208-230 VAC	208-230 VAC	208-230 VAC
Brown	0.50 BWS	L2	208-230 VAC	208-230 VAC	208-230 VAC	208-230 VAC	208-230 VAC
Green	#10 EYELET	Ground	GND	GND	GND	GND	GND
Blue	0.50 BWS	Common	Common	24 VAC	24 VAC	24 VAC	24 VAC
Yellow	0.50 BWS	Signal	PWM		24 VAC		24 VAC
White	0.50 BWS	Signal				24 VAC	24 VAC
Orange	0.50 BWS	Signal		24 VAC		24 VAC	
RPM	300-1100	300	500	850	1100		
Rotation	CCW	CCW	CCW	CCW	CCW		
ECM Toolbox ID			Variable	Speed 4	Speed 3	Speed 2	Speed 1
20% PWM RPM			300				
100% PWM RPM			1100				

5.4.10. Adjustable Fan Cycling Switch Procedure

Figure 30: Adjustable Fan Cycling Necessary Tools

To adjust the fan cycle switch, you will need a flathead screwdriver.

Figure 31: Cut in and Differential Pressure View

5.4.10.1. Recommended Settings

The switch will come factory set to cut in at 2.93 Mpa [425psi] (+/- 5psi) and a differential of 1.69 Mpa [155psi] (or open at 1.86 Mpa [270psi] (+/- 5psi)).

Note: 5 psi = 34.5 kPa

Figure 32: Adjustable Setting Screws

Figure 33: Cut in Gauge

To adjust the pressure setpoint for the Cut in Gauge:

- Lower pressure: clockwise
- Raise pressure: counterclockwise

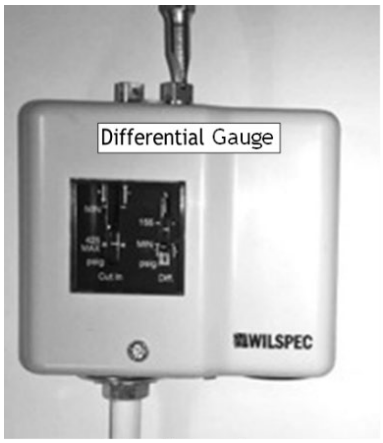

Figure 34: Differential Gauge

To adjust the pressure setpoint for the Differential Gauge:

- Lower pressure: clockwise
- Raise pressure: counterclockwise

Note: The pressure values on the gauges must be verified with gauges on the refrigerant line. The gauge scale is for illustration purposes only.

This Page Intentionally Left Blank

6. OPERATION

Unit operations must be controlled with a thermostat, or unit controller, never at the main power supply, except for servicing, emergency, or complete shutdown of the unit

6.1. Refrigerant Detection System

Each unit is equipped with a Refrigerant Detection System (RDS) to detect leaked refrigerant within the conditioned airstream and in the cabinet. The RDS consists of refrigerant detection sensors in the conditioned airstream and cabinet connected to a corresponding mitigation board. In the event of a refrigerant leak, the RDS sensors will send an alarm to the mitigation board. Each A2L mitigation board is equipped with an alarm output in the form of an NO/NC relay.

Building smoke control procedures may override the RDS alarm functions. See Appendix C for more information.

In the event of an airstream RDS alarm, the compressor operation is disabled, and the indoor blower is enabled to provide circulation airflow in accordance with UL 60335-2-40. In the event of a Cabinet or Gas Heat RDS alarm, compressor operation and gas heat operation are disabled. The indoor blower, and any form of heat other than gas, will resume normal operation. RDS alarm outputs are available via BACnet communication through the VCCX-454 controller.

For applications not using AAON VCCX-454 controls, mitigation board outputs will be wired to the low voltage terminal block.

In all cases, the mitigation board and the VCCX-454 controller will remain in alarm state for five minutes after the RDS sensor has cleared the alarm below the concentration setpoint.

For VAV applications and applications utilizing zone dampers, the VAV boxes and zone dampers must be wired to the airstream A2L Mitigation controller output to open all VAV boxes and zone dampers to allow for the required circulation airflow to prevent stagnation of leaked refrigerant. Other applications requiring additional refrigerant leak mitigation measures, as required by local code and ASHRAE 15, may be notified of detected refrigerant by this alarm output.

Verify the functionality of the RDS by removing the sensor connection at the mitigation board and ensuring that all sequences above take place, including the opening of VAV boxes and zone dampers, and additional mitigation procedures if applicable, as shown in Figure 35.

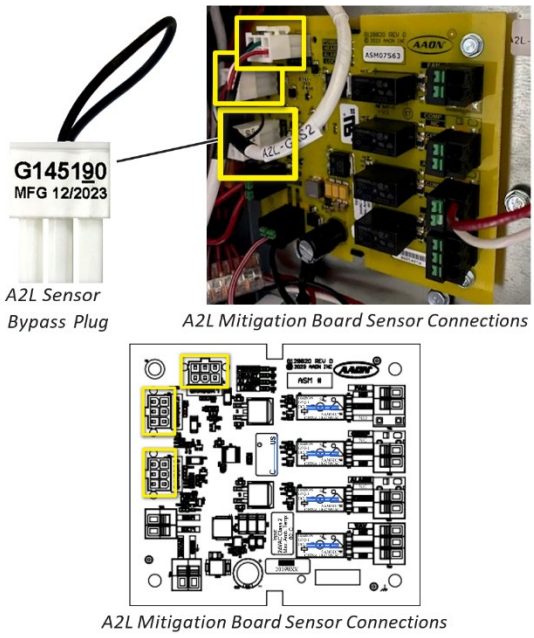

Figure 35: A2L Sensor Connections

CAUTION

Refrigerant sensors may only be replaced with manufacturer-approved sensors.

CAUTION

Certain applications may allow the unit to bring in unconditioned air. Free protection needs to be considered in the final application.

CAUTION

Additional mitigation procedures or fault conditions initiated outside of AAOON controls are the responsibility of the Building Engineer and must give appropriate priority in accordance with local codes.

6.2. Thermostat Operation

6.2.1. Heating

Thermostat system switch - “Heat”

Thermostat system switch - “Auto” or “On”

Thermostat temperature set to desired point.

6.2.2. Cooling

Thermostat system switch - “Cool” Thermostat fan switch - “Auto” or “On” Thermostat temperature set to desired point.

6.2.3. Air Circulation

Thermostat system switch - “Off” Thermostat fan switch - “Auto” or “On”

No change of the thermostat temperature.

With these settings, the supply blower will run continuously but the supply air will not be heated, cooled, or dehumidified.

6.2.4. System Off

Thermostat system switch - “Off” Thermostat fan switch - “Auto”

No change of the thermostat temperature.

With these settings the system is shut down, with the exception of control system power.

6.2.5. Night and Weekend Unoccupied Operation

To reduce the operating time of the unit when the space is unoccupied, such as nights and weekends, it is recommended that the temperature setting be raised about 5°F while unoccupied during the cooling season and lowered about 10°F during the heating season.

6.3. Packaged DX Cooling Operation and Control

When a call for cooling (G and Y1, Y2, etc.) is made the supply blower motors and compressors will energize.

Note: When using field control, any variable capacity compressor must run at 100% for 1 minute when starting.

6.4. Gas Heater Operation

When heat (G and W1, W2, etc.) is called for the combustion motor starts and the ignition control is energized. The control sends 24 VAC to the main gas valve and high voltage to the igniter. If a burner flame has been detected within 10 seconds, the spark is extinguished and the flame continues. If a flame has not been detected after 10 seconds, the gas valve closes, the spark ceases and the induced draft blower continues to purge the heat exchanger. After 45 seconds of purge, the ignition system will attempt to light the burners again. Should no flame be detected after 3 tries, the ignition control will lock out the system.

Power to the ignition control must be cycled to reset the heater control.

On a fault the gas train is shut down by a main limit located in the heat exchanger area or by an auxiliary limit mounted in the supply fan compartment.

Refrigerant sensors are located near the gas heat section to detect leaked refrigerant. In the event of a refrigerant leak in the gas heat or compressor section of the unit, the gas heat operation and compressor operation is disabled for five minutes until the leak is cleared. The indoor fan will continue to operate in its state prior to the alarm.

6.5. Electric Heating Operation

When a call for heating (G and W1, W2, etc.) is made the supply blower motors and electric resistance heaters will energize. Heating is accomplished by passing electrical current through a specified amount of resistance heaters, which will produce the required heat.

On a fault condition, the main limit located in the supply air or the auxiliary limit located downstream of the supply blower will remove power from all contactors.

6.6. Steam or Hot Water Preheating and Heating Operation

Valve control for steam and hot water heating coils are by others. Heating is accomplished by passing steam or hot water through the steam or hot water coil assembly.

6.7. Modulation Electric Preheat

Electric preheat is used to temper the incoming outside air to the unit based on an enable control signal and outside air conditions. Electric preheat has a maximum operation outside air temperature of 15.6°C (60°F) and a maximum preheat discharge air temperature of 26.7°C (80°F).

6.8. Chilled water or Non-compressorized DX Cooling Operation

Controls for chilled water-cooling coils and non-compressorized DX coils are by others.

This Page Intentionally Left Blank

7. MAINTENANCE

(See the back of the manual for the maintenance log)

At least once each year, a trained, qualified service technician must check out the unit. Fans, evaporator coils, and filters must be inspected at least monthly.

7.1. Supply Fan

WARNING

Electric shock hazard. Shut off all electrical power to the unit to avoid shock hazard or injury from rotating parts.

CAUTION

Blower wheels and bands must be inspected for excessive dust buildup periodically and cleaned if required. Excessive dust buildup on blower wheels may cause an unbalanced state, leading to vibration and/or component failure. Damages due to excessive dust buildup will not be covered under the factory warranty.

7.1.1. Factory Lubrication

Note: Bearing lubrication only applies to belt driven fan motors such as the energy recovery wheel power exhaust fan motor.

All original fan motors and bearings are furnished with factory lubrication. Some applications will require that bearings be re-lubricated periodically. The schedule will depend on the operating duty, temperature variations or other severe atmospheric conditions.

Bearings must be re-lubricated when at normal operating temperatures, but not running. Rotate the fan shaft by hand and add only enough grease to purge the seals. Do Not Over Lubricate.

Recommended greases are:

- SHELL OIL - DOLIUM R
- CHEVRON OIL - SvRI No. 2
- TEXACO INC. - PREMIUM RB

7.1.2. Removal

Remove the fan access panel on the back side of the unit. Panel is attached with eight 8 mm (5/16") bolts.

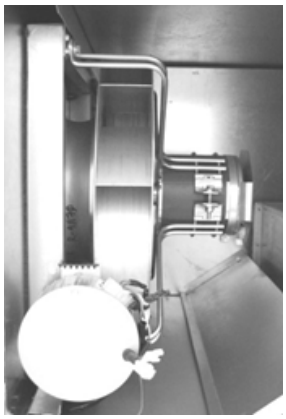

Figure 36: 2-5-Ton Supply Fan

Remove wire connections from the motor. For EC motors, unplug the wire harness at the control module that connects to the unit control panel.

Through the blower access opening, remove the two 8 mm (5/16") bolts that connect the blower assembly to the inlet wall (see Figure 37 below).

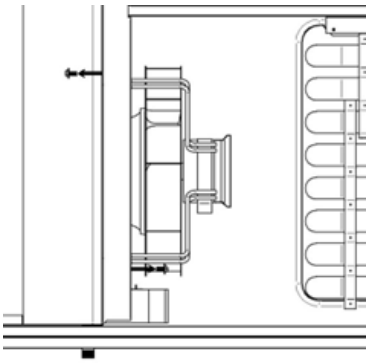

Figure 37: RQ Supply Fan Removal Bolts

Through the coil access door, remove the two 8 mm (5/16") bolts that connect the blower assembly to the inlet wall from the air entering side of the wall (see Figure 37).

Slide blower assembly (wire frame motor mount, motor, blower wheel, inlet, and sheet-metal slide) out of the unit through the blower access opening (see Figure 38).

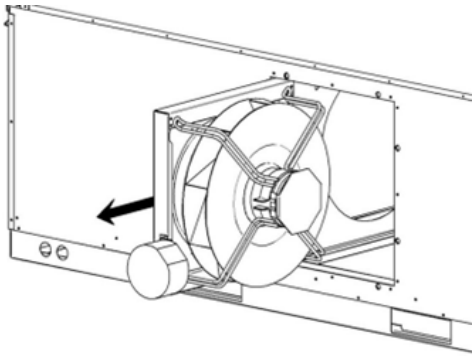

Figure 38: RQ Supply Fan Removal Slide

7.2. DX Cooling

Set unit controls to cooling mode of operation with supply fans on. Check the fan for correct operating direction, amperage, and voltage. Check compressor operation, rotation, amperage, and voltage to the unit nameplate (check the amperage on the load side of the compressor contactor).

7.3. Condensate Drain Pans

Drain pans will have moisture present and require periodic cleaning to prevent microbial growth. Cleaning of the drain pans will also prevent any possible plugging of the drain lines and overflow of the pan itself. Cleaning of the drain pans and inside of the unit must be done only by a qualified service technician.

7.4. E-Coated Coil Cleaning

Documented routine cleaning of e-coated coils is required to maintain coating warranty coverage for fin and tube and microchannel coils. E-Coated Coil Maintenance Record sheets are provided in the appendix.

WARNING

Electric shock hazard. Shut off all electrical power to the unit to avoid shock hazard or injury from rotating parts.

Surface-loaded fibers or dirt must be removed prior to water rinse to prevent restriction of airflow. If unable to backwash the side of the coil opposite the coil's entering air side, then surface loaded fibers or dirt must be removed with a vacuum cleaner. If a vacuum cleaner is not available, a soft, non-metallic bristle brush may be used. In either case, the tool must be applied in the direction of the fins. Coil surfaces can be easily damaged (fin edges bent over) if the tool is applied across the fins.

Use of a water stream, such as a garden hose, against a surface loaded coil will drive the fibers and dirt into the coil. This will make cleaning efforts more difficult. Surface loaded fibers must be completely removed prior to using low velocity clean water rinse.

A monthly clean water rinse is recommended for coils that are applied in coastal or industrial environments to help remove chlorides, dirt, and debris. It is very important when rinsing that the water temperature is less than 54.4°C (130°F) and pressure is less than 689.5 kPa (100 psig) to avoid damaging the fin edges. An elevated water temperature (not to exceed 54.4°C [130°F]) will reduce surface tension, increasing the ability to remove chlorides and dirt.

CAUTION

High-velocity water from a pressure washer or compressed air must only be used at very low pressure to prevent fin and/or coil damage. The force of the water or air jet may bend the fin edges and increase the airside pressure drop. Reduced unit performance or nuisance unit shutdowns may occur.

Quarterly cleaning is essential to extend the life of an e-coated coil and is required to maintain coating warranty coverage.

Coil cleaning shall be part of the unit's regularly scheduled maintenance procedures. Failure to clean an e-coated coil will void the warranty and may result in reduced efficiency and durability.

CAUTION

Harsh chemicals, household bleach, or acid cleaners must not be used to clean outdoor or indoor e-coated coils. These cleaners can be very difficult to rinse out of the coil and can accelerate corrosion and attack the E-coating. If there is dirt below the surface of the coil, use the recommended coil cleaners.

For routine quarterly cleaning, first clean the coil with the approved coil cleaner below. After cleaning the coils with the approved cleaning agent, use the approved chloride remover to remove soluble salts and revitalize the unit.

7.4.1. Recommended Coil Cleaner

The following cleaning agent, when used in accordance with the manufacturer's directions on the container for proper mixing and cleaning, has been approved for use on e-coated coils to remove mold, mildew, dust, soot, greasy residue, lint, and other particulate:

Enviro-Coil Cleaner: AAON PN: V82540
GulfClean ™ Coil Cleaner ; AAON PN: G074480

7.4.2. Recommended Chloride Remover

GulfClean Salt Reducer™ ; AAON PN: G074490

GulfClean Salt Reducer™ is used to remove soluble salts from the e-coated coil, follow the manufacturer's instructions. This product is not intended for use as a degreaser. Any grease or oil film must first be removed with GulfClean ™ Coil Cleaner.

Remove Barrier - First, ensure the power to the unit is off and locked out. Clean the area around the unit if needed to ensure leaves, grass, or loose debris will not be blown into the coil. Soluble salts adhere to the substrate. For the effective use of this product, the product must be able to come in contact with salts. These salts may be beneath any soils, grease, or dirt; therefore, these barriers must be removed prior to application of this product. As in all surface preparation, the best work yields the best results.

Application - Apply GulfClean ™ Coil Cleaner directly onto the substrate. Sufficient product must be applied uniformly across the substrate to thoroughly wet out surface, with no areas missed. This may be accomplished by the use of a pump-up sprayer or a conventional spray gun. Apply the cleaner to the unit's interior air exiting side coil surfaces first. Work in sections/panels, moving side to side and from top to bottom. Allow the cleaning solution to soak for 5 to 10 minutes. Then move on to the exterior using the same method.

Rinse - Using pressurized potable water such as a garden hose (< 689.5 kPa [100 psi]), rinse the coils and continue to always work in sections/panels.

Continue until all coil areas on the inside of the unit have been rinsed.

Note: Coils must always be cleaned/back flushed, opposite to airflow, to prevent impacting the dirt into the coil.

7.5. Microchannel Coil Cleaning

Cleaning microchannel coils is necessary in all locations. In some locations, it may be necessary to clean the coils more or less often than recommended. The condenser coil must be cleaned at a minimum of once a year. In locations where there is commonly debris or a condition that causes dirt/grease buildup it may be necessary to clean the coils more often. Proper procedure must be followed at every cleaning interval. Using improper cleaning techniques or incorrect chemicals will result in coil damage, system performance fall off, and potentially leaks requiring coil replacement.

Documented routine cleaning of microchannel coils with factory provided e-coating is required to maintain coating warranty coverage. Use the E-Coated Coil Cleaning section for details on cleaning e-coated coils.

Field applied coil coatings are not recommended with microchannel coils.

7.5.1. Allowed Chemical Cleaners and Procedures

AAON recommends certain chemicals that can be used to remove the buildup of grime and debris on the surface of microchannel coils. These chemicals have been tested for performance and safety and are the only chemicals that AAON will warrant as correct for cleaning microchannel coils.

There are three procedures that are outlined below that will clean the coils effectively without damage to the coils. Use of any other procedure or chemical may void the warranty on the unit where the coil is installed. With all procedures, make sure the unit is off before starting.

WARNING

Electric shock hazard. Shut off all electrical power to the unit to avoid shock hazard or injury from rotating parts.

The water pressure used to clean must not exceed 689.5 kPa (100 psi), from no closer than 15.2 cm (6 inches) from the coils, and with the water aimed perpendicular to the coils.

7.5.2. #1 Simple Green

Simple Green is available from AAON Parts and Supply (Part# T10701) and is biodegradable with a neutral 6.5 pH A 4 to 1 solution is recommended. Use the following procedure.

1. Rinse the coil completely with water. Use a hard spray, but be careful not to bend or damage the fins. A spray that is too hard will bend the fins. Spray from the fan side of the coil.
2. With a pump sprayer filled with a mix of 4 parts water to one part Simple Green, spray the air inlet face of the coil. Be sure to cover all areas of the face of the coil.
3. Allow the coil to soak for 10-15 minutes.
4. Rinse the coil with water as in step one.
5. Repeat as necessary.

7.5.3. #2 Water Flush

This procedure can be used when the only material to cause the coil to need cleaning is debris from plant material that has impinged the coil face.

1. Rinse the coil completely with water. Use a hard spray, but be careful not to bend or damage the fins. A spray that is too hard will bend the fins. Spray from the fan side of the coil.
2. Spray and rinse the coil from the face.

7.5.4. Application Examples

The two procedures can be used to clean microchannel coils. They will fit with the application depending on the area. In some areas where the spring/summer has a large cottonwood bloom, #2 might work fine if the unit is installed on an office building and no other environmental factors apply.

Generally, the best and broadest based procedure is #1. The grease cutting effect of Simple Green is good for restaurant applications.

7.5.5. Other Coil Cleaners

There are many cleaners on the market for condenser coils. Before using any cleaner that is not covered in this section, you must get written approval from the AAON warranty and service department. Use of unapproved chemicals will void the warranty.

AAON testing has determined that unless a chemical has a neutral pH (6-8), it must not be used.

Beware of any product that claims to be a foaming cleaner. The foam that is generated is caused by a chemical reaction of the aluminum fin material on the tube and fin coils, and with the fin, tube, and coating material on microchannel coils.

Microchannel coils are robust in many ways, but like any component, they must be treated correctly. This includes cleaning the coils correctly to give optimal performance over many years.

7.5.6. Roofing

The cleaning procedures outlined here use relatively benign ingredients. When working with a rooftop unit, care must be taken to make sure the chemicals will not adversely affect the roof coating. Checking with the roofing supplier/manufacturer is the best way to proceed. If the roofing supplier/manufacturer is the best way to proceed. If the roofing supplier/manufacturer is not available, testing the chemicals on the roof coating is recommended.

Commercial roofing material manufacturers using PVC and EPDM have been contacted and indicate that there is no problem with any of the procedures outlined above.

7.5.7. Refrigerant Removal and Evacuation

If the removal of the refrigerant is required for any maintenance or servicing, conventional procedures must be used, and the removal of the refrigerant must be in accordance with local and national regulations.

WARNING

Prior to performing work that can result in the release of a flammable refrigerant, inspect the area to ensure it is free of any potential ignition sources. "No Smoking" signs are to be displayed while performing work.

Safety precautions must be taken prior to beginning work to ensure that the risk of fire due to flammable refrigerants is minimized. Work is to be undertaken under a controlled procedure to reduce the amount of refrigerant vapor present while work is being performed. All maintenance staff and others working in the area are to be instructed on the nature of work being performed. Care should be taken to ensure that working in a confined space is avoided. Do not use any sources of ignition in a manner that can lead to fire or explosion when working near exposed refrigerant piping.

Check area with a refrigerant detector suitable for use with the refrigerant prior to and during work in order to be aware of potential flammable environment. Keep a dry powder or CO_2 fire extinguisher nearby if any hot work is being performed.

Ensure that work area is sufficiently ventilated before breaking into the system. Ventilation must continue throughout all of the work. Ensure that ventilation safely removes flammable refrigerant to an area that will adequately disperse refrigerant to avoid concentration above flammable levels.

Refrigerant must be recovered into the correct recovery cylinders in accordance with local and national regulations. Recovery cylinders must be labeled properly. Ensure that the correct number of cylinders are available for holding the entire charge of the system. Cylinders must have pressure relief and shut-off valves that are in proper working order. Fully evacuate a recovery cylinder before use.

The recovery equipment must be in good working order with a set of instructions concerning the equipment that is at hand. Ensure that equipment is suitable for the recovery of flammable refrigerant used. If in doubt, the manufacturer should be consulted. In addition, a set of calibrated weighing scales must be available and in good working order. Ensure hoses are complete with leak-free disconnect couplings and in good condition.

When removing refrigerant to open the system, evacuate the system and flush or purge the system continuously with an inert gas when using a flame to open the circuit.

The system must be purged with oxygen-free nitrogen to render the appliance safe for flammable refrigerant. Compressed air or oxygen must not be used. When pulling a vacuum, ensure that the outlet of the vacuum pump is not near any potential ignition source and in a well-ventilated area.

The recovered refrigerant is to be processed according to local legislation in the correct recovery cylinder, and the relevant waste transfer note arranged. Do not mix refrigerants in recovery units and especially not in cylinders.

If compressors or compressor oils are to be removed, ensure that they have been evacuated to an acceptable level to make certain that flammable refrigerant does not remain within the lubricant. Do not heat the compressor body by using an open flame or other ignition sources to accelerate this process. Remove any drained oil safely.

8. OPTIONS

(See the back of the manual for the maintenance log)

8.1. Heating Coils

One or two row hot water and steam heating and preheating coils can be factory installed. All valve controls for heating operation are field supplied and field installed. Hot water and steam coil connections are spun copper tubes.

Water coils must not be subjected to entering air temperatures below 3.3°C (38°F) to prevent coil freeze-up. If the air temperature across the coil is going to be below this value, use a glycol solution to match the coldest air expected.

Table 19: Hot Water Coil Connection Sizes

Model (RQ-)	Hot Water Coil Connection Size
002-005	22mm (7/8 inches)

Table 20: Steam Coil Connection Sizes

Model (RQ-)	Steam Coil Connection Size
002-005	29mm (1 1/8 inches) (preheat coil)

8.2. Chilled Water Coil

Four or six-row chilled water-cooling coils can be factory installed. All valve controls for cooling operation are field supplied and field installed. Chilled water coil connections are spun copper tubes.

WARNING

Piping, pressure limiting devices, backflow preventers, and all other safety requirements shall be in accordance with national and local codes.

Table 21: Chilled Water Coil Connection Sizes

Model (RQ-)	Steam Coil Connection Size
002-005	29mm (1 1/8 inches) (preheat coil)

CAUTION

The unit shall have proper sealing of the water piping entries into the unit. Failure to seal the entries may result in damage to the unit and property.

Table 22: Min. and Max. Water Pressures and Temps.

	Chilled Water	Hot Water
Min Entering Air	15.6°C (60°F)	4.4 °C (40°F)
Max Entering Air	37.8°C (100°F)	26.7°C (80°F)
Min Entering Water	1.7°C (35°F)	60°C (140°F)
Max Entering Water	18.3°C (65°F)	93.3°C (200°F)
Min Water Pressure	0 kPa (15 psig)	
Max Water Pressure	2068 kPa (300 psig)	

8.3. Packaged Direct Expansion (DX) Units

WARNING

Compressor Cycling:
3 Minute Minimum Off Time - To prevent the motor from overheating, compressors must cycle off for a minimum of 3 minutes.
5 Minute Minimum on Time - To maintain the proper oil level, compressors must cycle on for a minimum of 5 minutes.
The cycle rate must not exceed 7 starts per hour.

The DX Refrigeration system is factory assembled, leak tested, charged with refrigerant, and run tested.

The refrigerant system includes an evaporator, condenser, liquid line filter drier, thermal expansion valve (TXV), and scroll compressor. Variable speed, and variable speed refrigerant injection, compressor systems include an electronic expansion valve (EEV). The compressor is equipped with a positive pressure forced lubrication system.

Never cut off the main power supply to the unit, except for servicing, emergency, or complete shutdown of the unit. When power is cut off from the unit crankcase heater cannot prevent refrigerant migration into the compressor. This means the compressor will cool down, and liquid refrigerant may accumulate in the compressor. The compressor is designed to pump refrigerant gas, and damage may occur when power is restored.

CAUTION

Crankcase Heater Operation:
Some units are equipped with a compressor crankcase heater, which must be energized at least 24 hours before the cooling operation, to clear any liquid refrigerant from the compressor.

If power to the unit must be off for more than an hour, turn the thermostat system switch to "OFF", or turn the unit off at the control panel, and leave the unit off until the main power switch has been turned on again for at least 24 hours for units with compressor crankcase heaters. This will give the crankcase heater time to clear any liquid accumulation out of the compressor before it is started.

Always control the unit from the thermostat, or control panel, never at the main power supply, except for servicing, emergency, or complete shutdown of the unit.

During the cooling season, if the air flow is reduced due to dirty air filters or any other reason, the cooling coil can get too cold, which will cause excessive liquid to return to the compressor. As the liquid concentration builds up, oil is washed out of the compressor, leaving it starved for lubrication.

The compressor life will be seriously shorted by reduced lubrication and the pumping of excessive amounts of liquid oil and refrigerant.

8.3.1. Low Ambient Operation

Air-cooled DX units without a low ambient option, such as condenser fan cycling or the -17.8°C (0°F) low ambient option, will not operate in the cooling mode of operation properly when the outdoor temperature is below 12.8°C (55°F). Low ambient and/ or economizer options are recommended if cooling operation below 12.8°C (55°F) is expected.

8.3.2. Multiple Units with Multiple Thermostats

When several heating and cooling units are used to condition a space, all unit thermostat switches must be set in either heating mode, cooling mode, or off. Do not leave part of the units switched to the opposite mode. Switch off cooling only units at the thermostat during the heating season.

8.3.3. Variable Capacity Compressor Controller

Units with variable capacity scroll compressors may include the following compressor controller. The following is an explanation of the terminals and troubleshooting alert flash codes of the controller. For more information on the compressor controller, see Emerson Climate Bulletin AE8-1328.

Note: When using field controls, any variable capacity compressors must run at 100% for 1 minute when starting.

Figure 39: Variable Capacity Compressor Controllers

WARNING

To avoid damaging the Compressor Controller, do not connect wires to terminals C3, C4, T3, T4, T5, or T6.

8.3.3.1. Low Voltage Terminals

24COM - Module Common
24VAC - Module Power
C1 & C2 - Demand Input
P1 - Pressure Common P2 - Pressure Input
P3 - Pressure Power 5VDC
P4 - Pressure Shield
P5 & P6 - Pressure Output
T1 & T2 - Discharge Temperature Sensor

8.3.3.2. High Voltage Terminals

A1 & A2 - Alarm Relay Out
M1 & M2 - Contractor
L1 - Control Voltage N
L2 - Control Voltage L
U1 & U2 - Digital Unloader Solenoid
V1 & V2 - Vapor Injection Solenoid

The compressor controller modulates the compressor unloader solenoid in an on/off pattern according to the capacity demand signal of the system. The following table shows the linear relationship between the demand signal and compressor capacity modulation. The compressor controller protects the compressor against high discharge temperature. Refer to Appendix B for the relationship between thermistor temperature readings and resistance values.

Table 23: Demand Signal VS Compressor Capacity Modulation

Demand Signal (VDC)	Loaded %	Unloaded %	Time Loaded	Time Unloaded	% Compressor Capacity
1.00	Off	Off	Off	Off	0%
1.44	10%	90%	1.5 sec	13.5 sec	10%
3.00	50%	50%	7.5 sec	7.5 sec	50%
4.20	80%	20%	12 sec	3 sec	80%
5.00	100%	0%	15 sec	0 sec	100%

Table 24: Compressor Controller LED Descriptions

LED	Description
Green LED Steady	24VAC power
Yellow LED Steady	Unloader solenoid ON
Red LED Flashing	ALERT Flash Code
Green LED Flashing	Anti-short cycle timer active
ALL LED Flashing	24VAC supply too low for operation
ALL LED Steady	Controller failure

- Reset ALERT code or lockout by removing the 24VAC supply to the module
- All ALERTS close alarm relay contacts
- All ALERTS deenergize the contactor and solenoids except Code 6
- Compressor always unloads for 0.1 seconds at startup
- Compressor only starts when the Demand signal input is above 1.45 VDC and no ALERTS are present

Table 25: Compressor Controller Alert Flash Codes

Code (Red LED flashing pattern)	Description
1	Reserved for future use
2	**High Discharge Temperature** Discharge thermistor above trip set point or thermistor short circuited. Resets after 30 minutes and motor cools down. If five events occur within four hours, the compressor is locked out.
3	**Compressor Protector Trip** No compressor current is detected when the compressor should be running. Resets when compressor current is detected.
4	**Locked Rotor** Locked rotor condition is detected. The compressor is locked out.
5	**Demand Signal Loss** Demand input signal is below 0.5VDC. Resets after the demand input signal rises above 1.0VDC
6	**Discharge Thermistor Fault** Thermistor is not connected. Reset by reconnecting the thermistor.
7	Reserved for future use.
8	**Compressor Contactor Fault** Compressor current is detected when the compressor should be off. Resets when current is no longer detected.
9	**Low 24VAC Supply** Supply voltage to the module has dropped below 18.5VAC. Resets after voltage rise above 19.5VAC.

8.4. Evaporator Coil

WARNING

Electric shock hazard. Shut off all electrical power to the unit to avoid shock hazard or injury from rotating parts.

8.4.1. Removal

Evacuate refrigerant from the systems.

Remove the TXV bulbs from the suction lines. Disconnect the suction and liquid line copper connections to the evaporator coil.

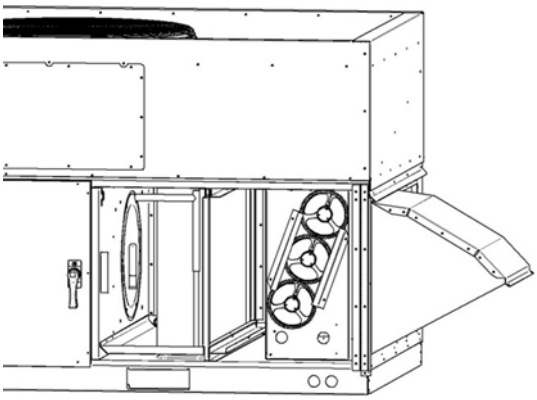

Figure 40: Evaporator Coil Access

Remove the screws attaching the filter rack to the evaporation coil at the front and back of the coil. It may be necessary to remove the economizer assembly (if equipped) to access the screws at the back.

Slide the evaporator coil straight out of the unit.

It may be necessary to make a vertical cut in the front flange of the drain pan on either side of the coil and bend the flange down between the cuts to remove the evaporator coil.

8.4.2. Reinstallation

Slide the new coil into the unit through the notch cut in the front of the drain pan.

Re-bend the cut flange back to the original position, then seal the cuts with polyurethane caulking.

Attach the filter to the front and back of the evaporation coil. Reinstall the economizer assembly if necessary.

Connect the suction and liquid copper connections to the evaporator coil. Reinstall the TXV bulb on the suction line.

Evacuate the refrigerant system. Weigh the nameplate refrigerant charge.

See the Adjusting Refrigerant Charge section to check for proper sub-cooling and superheat of the refrigerant systems.

8.5. Condenser Fan

WARNING

Electric shock hazard. Shut off all electrical power to the unit to avoid shock hazard or injury from rotating parts.

WARNING

Improper installation, adjustment, alteration, service, or maintenance can cause property damage, personal injury, or loss of life. Startup and service must be performed by a Factory Trained Service Technician.

8.5.1. Removal

Take off the fan grill by removing the screws that attach it to the top of the unit.

Disconnect the wiring from the motor and loosen the bolt that clamps the motor mount to the motor. Remove the motor and fan through the top of the orifice.

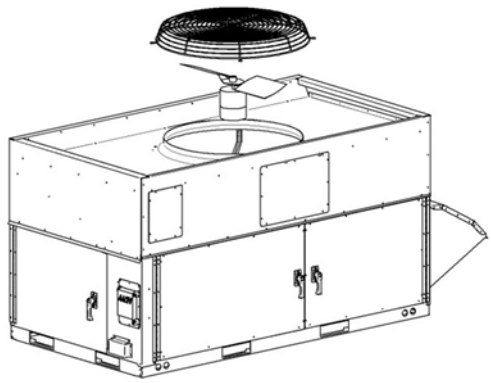

Figure 41: Removal of a Condenser Fan Assembly

8.5.2. Reinstallation

Set the motor back into the motor mount and tighten the bolt. Adjust the fan until the top of the blade is even with the top of the orifice.

Reconnect wires, then attach the fan grill at all the points where screws were removed.

8.6. Refrigerant-to-Water Heat Exchanger

Condenser water pump, condenser water piping, cooling tower or geothermal loop, pressure gauges, strainers, piping insulation, and all components of the waterside piping must be field installed.

8.6.1. Water-Source Heat Pump Applications

Water-source heat pump units using 100% outside air must have electric preheat if the application has a potential for operation with air entering the indoor coil below 6.1°C (43°F) with a water loop temperature of 21.1°C (70°F).

CAUTION

Water-Source Heat Pump Applications:
Water-source heat pump units using 100% outside air must have electric preheat if the application has a potential for heat pump heating operation with air entering the indoor coil below 6.1°C (43°F) with an entering water loop temperature of 21.1°C (70°F).

8.6.2. Open Loop Applications

This product contains one or more refrigerant-to-water heat exchangers made of copper, which are subject to corrosion and failure when exposed to chlorides.

Do not allow water containing any form of chlorides to enter this heat exchanger.

WARNING

Open Loop Applications:
Failure of the condenser as a result of chemical corrosion is excluded from coverage under AAON Inc. warranties and the heat exchanger manufacturer's warranties.

Common forms of chlorides include:

1. Sea water mist entering an open cooling tower system.
2. Contaminated make-up water containing salt water.
3. Disinfecting the water loop with solutions containing sodium hypochlorite.

Chlorides will result in a premature failure of the condenser.

Failure of the condenser as a result of chemical corrosion is excluded from coverage under AAON warranties and the heat exchanger manufacturer warranties.

Failure of the condenser will allow water to enter the refrigerant circuit and will cause extensive damage to the refrigerant circuit components. Any damage to the equipment as a result of condenser failure from chemical corrosion due to the fluid in the condenser is excluded from coverage under AAON warranties and the heat exchanger manufacturer warranties.

8.6.3. Freezing Water in the Heat Exchanger

WARNING

Open Loop Applications:
Cupronickel refrigerant-to-water heat exchangers must be used with all open loop applications. Failure to use a Cupronickel heat exchanger may result in premature failure of your system and possible voiding of the warranty.

CAUTION

Cleaning the cooling tower or condenser water loop with harsh chemicals such as hydrochloric acid (muriatic acid), chlorine or other chlorides can damage the refrigerant-to-water heat exchanger. Care must be taken to avoid allowing chemicals to enter the refrigerant-to-water heat exchanger. See Appendix A - Heat Exchanger Corrosion Resistance for more information.

This product contains one or more refrigerant-to-water heat exchangers. A refrigerant-to-water heat exchanger contains refrigerant in one passage and water in another passage. Water is subject to freezing at 0°C (32°F). When water freezes in a heat exchanger, significant forces are exerted on the components of the heat exchanger where the water is confined.

Failure of the condenser due to freezing will allow water to enter the refrigerant circuit and will cause extensive damage to the refrigerant circuit components. Any damage to the equipment as a result of water freezing in the condenser is excluded from coverage under AAON warranties and the heat exchanger manufacturer's warranties.

The unit is capable of operating with Entering Water Temperatures (EWT) as low as 13.9°C (57°F), during the cooling mode, without the need for head pressure control.

If the EWT is expected to be lower than 13.9°C (57°F) or a more stable operation is desired, a factory provided head pressure control water valve option is available.

Glycol solution must be used if ambient temperatures are expected to fall below freezing or if the loop entering water temperature to the unit is below 10°C (50°F) while operating in the heating mode (heat pump units only). Adding glycol to condenser water causes an increase in pressure drop and also results in a decrease in unit performance. A minimum concentration of 20% glycol solution is recommended.

WARNING

Water Freezing:
Failure of the condenser due to freezing will allow water to enter the refrigerant circuit and will cause extensive damage to the refrigerant circuit components. Any damage to the equipment as a result of water freezing in the condenser is excluded from coverage under AAON warranties and the heat exchanger manufacturer's warranties.

Water loop piping that runs through unheated areas or outside the building must be insulated.

Table 26: Glycol Concentration Freezing Points

% Glycol	Ethylene Glycol °C (°F)	Propylene Glycol °C (°F)
0	0 (32)	0 (32)
20	-7.8 (18)	-7.2 (19)
30	-13.9 (7)	-12.8 (9)
40	-21.7 (-7)	-21.1 (-6)
50	-33.3 (-28)	-32.8 (-27)

Never operate the unit in heat pump mode with a saturated suction temperature below 1.7°C (35°F) for pure water systems or below the freezing point +(-16.1°C [3°F]) of the aqueous solution of water and glycol.

8.6.4. Water Piping

Verify that a water flow switch is installed between the condenser water supply and return connections. This sensor provides a signal to the unit controller that water flow is present in the refrigerant-to-water heat exchanger, and the unit can operate without damaging unit components.

WARNING

Water Freezing:
Prior to connection of the condensing water supply, verify water pressure is less than the maximum pressure shown on the unit nameplate. To prevent injury or death due to the instantaneous release of high-pressure water, relief valves must be field supplied on water piping. Supply water connection may require a backflow preventer to prevent supply makeup water from backing up into the public water system.

Table 27: Glycol Concentration Freezing Points

Model (RQ-)	Supply and Return Connection Size
002	3/4" Sweat
003, 004, 005	1" Sweat
Note: 3/4" = 19 mm, 1" = 25mm	

Only use approved water pipe material. Avoid using galvanized material for water lines/fittings as the material is corrosive and may cause fouling of the water system.

CAUTION

PVC (Polyvinyl Chloride) and CPVC (Chlorinated Polyvinyl Chloride) are vulnerable to attack by certain chemicals. Polyolester (POE) oils used with R-454B and other refrigerants, even in trace amounts, in a PVC or CPVC piping system, will result in stress cracking of the piping and fittings and complete piping system failure.

The condenser water pump must be field sized and installed between the cooling tower/geothermal loop and self-contained unit. The system must be sized in accordance with the ASHRAE Handbook. Use engineering guidelines to maintain equal distances for supply and return piping and limit bend radii to maintain balance in the system. Balancing valves, permanent thermometers, and gauges may be required.

CAUTION

Water Piping:
Follow national and local codes when installing water piping. Connections to the unit must incorporate vibration eliminators to reduce noise and vibration and allow the shutoff valves to facilitate servicing. Supply and return water piping must be at least as large as the unit connections or larger, depending on the length of runs, rise, and bends.

Before connecting to the unit, the condenser water system must be flushed to remove foreign material that could cause condenser fouling. Install a screen strainer with a minimum of 20 Mesh ahead of the condenser inlet to prevent condenser fouling and internal tube damage.

The mineral content of the condenser water must be controlled. All make-up water has minerals in it, and as the water is evaporated in the cooling tower, these minerals remain. As the mineral content of the water increases, the conductivity of the water increases.

Field provided and installed water treatment program must be compatible with stainless-steel, copper, aluminum, ABS plastic, and PVC. Batch feed processes must never be used as concentrated chemicals can cause corrosion. Never use hydrochloric acid (muriatic acid) or chlorine as it will corrode stainless-steel.

CAUTION

Each heat exchanger is equipped with a refrigerant pressure relief device to relieve pressure should excessive condensing pressures (>4.65 kPa [675 psig]) occur. Codes may require a qualified technician to connect and route relief piping outdoors. The relief valve has a 16mm (5/8") male flare outlet connection.

Note: Ball valves must be installed in the condenser water supply and return lines for unit isolation and water flow balancing. All manual flow valves must be of the ball valve design. Globe or gate valves must not be used due to high pressure drops and poor throttling characteristics.

Pressure and temperature ports are recommended in condenser water supply and return lines for system balancing. These openings must be 5 to 10 pipe diameters from the unit water connections. To allow for mixing and temperature stabilization, wells in the water piping must extend at least 1/2 pipe diameter into the pipe.

CAUTION

A qualified technician is responsible for properly sizing and installing water system components. Improper flow due to valves, piping, or improper pump operation may result in unacceptable unit operation and void the warranty.

Piping systems must not exceed 3.1 m/s (10 ft/sec) fluid velocity to ensure tube wall integrity and reduce noise.

8.7. Energy Recovery Units

WARNING

Improper installation, adjustment, alteration, service, or maintenance can cause property damage, personal injury, or loss of life. A Factory Trained Service Technician must perform startup and service.

8.7.1. General Information

AAONAIRE® units have been equipped with an energy recovery wheel. This section is provided to ensure the energy recovery feature will be properly set up to perform in accordance with the job specifications for your particular application.

1. Removable Segment (NA for monolith)
2. Permanent Tension Belt
3. Pulley
4. Embedded Segment Stiffeners (NA for monolith)
5. Segment Retaining Latches (NA for monolith)
6. Bearing Beam and Bearing Access Cover Plate (Diameter Seals are behind the Bearing Beam on both sides)
7. Adjustable Purge
8. Motor

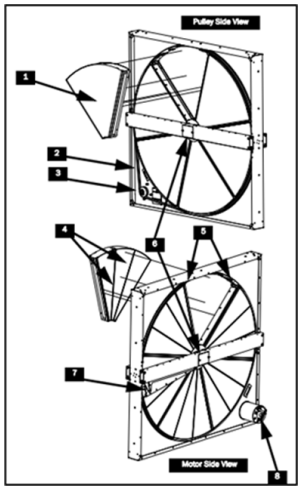

Figure 42: Energy Recovery Wheel

The Energy Recovery Cassette consists of a frame wheel, wheel drive system, and energy transfer segments. Segments are removable for cleaning or replacement. The segments rotate through counter-flowing exhaust and outdoor air supply streams where they transfer heat and/or water vapor from the warm, moist air stream to the cooler and/or drier air stream.

The initial setup and servicing of the energy recovery wheel is very important to maintain proper operation efficiency and building occupant comfort.

Normal maintenance requires periodic inspection of filters, the cassette wheel, drive belts, air seals, wheel drive motor, and its electrical connections.

Wiring diagrams are provided with each motor. When wired according to the wiring diagram, the energy recovery wheel rotates clockwise when viewed from the shaft/pulley side.

By carefully reviewing the information within this section and following the instructions, the risk of improper operation and/or component damage will be minimized.

It is important that periodic maintenance be performed to help ensure trouble-free operation.

8.7.2. Initial Mechanical Check and Setup

Outdoor units equipped with outside air intake will have an outside air hood. The outside air hood must be opened prior to unit operation.

Outdoor air intake adjustments must be made according to building ventilation or local code requirements.

After the unit installation is complete, open the cassette access door and determine that the energy wheel rotates freely when turned by hand with no interference noise. Apply power and observe that the wheel rotates at approximately 45-50 RPM. If the wheel does not rotate when power is applied, it may be necessary to readjust the "diameter air seals".

8.7.3. Air Seals Adjustments

Pile-type air seals across both sides of the energy wheel diameter are factory adjusted to provide close clearance between the air seal and wheel.

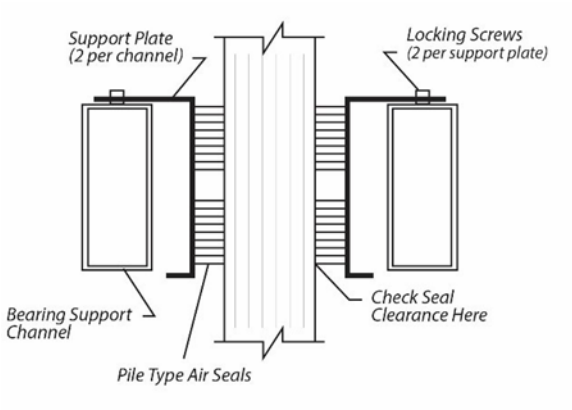

Figure 43: Cross Section of Air Seal Structure

Racking of the unit or cassette during installation, and/or mounting of the unit on a non-level support or in other than the factory orientation can change seal clearances. Tight seals will prevent rotation.

8.7.4. Wheel to Air Seal Clearance

To check the wheel-to-seal clearance, disconnect power to the unit. In some units, the energy recovery wheel assembly can be pulled out from the cabinet to view the air seals. On larger units, the energy recovery wheel may be accessible inside the walk-in cabinet.

A business card or two pieces of paper can be used as a feller gauge (typically each .1 mm [.004"] thick) by placing it between the face of the wheel and pile seal.

Using the paper, determine if a loose slip fit exists between the pile seal and wheel when the wheel is rotated by hand.

To adjust air seal clearance, loosen all seal plate retaining screws holding the separate seal retaining plates to the bearing support channels and slide the seal plates away from the wheel. Using the paper feeler gauge, readjust and re-tighten one seal plate at a time to provide slip fit clearance when the wheel is rotated by hand.

Confirm that the wheel rotates freely. Apply power to the unit and confirm rotation. Visually inspect the belt and ensure the belt is tracking near the center of the rim. Verify the wheel speed is approximately 45-50 RPM. Confirm there is no excessive noise such as scraping, brushing, or banging.

8.7.4.1. Set Purge Angle (if included)

When installed, the purge angle is factory set to 5 degrees. If a different angle is required, complete the following steps to adjust the purge:

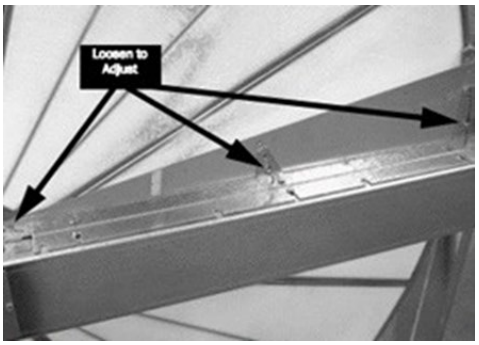

Figure 44: Loosen Adjusting Screws

1. Loosen the three purge adjusting screws.
2. Adjust purge sector to the specified angle.

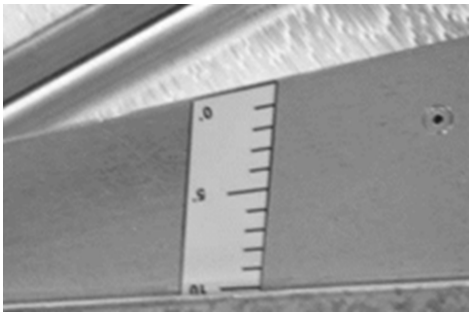

Figure 45: Loosen Adjusting Screws

3. Tighten the purge adjusting screws.
4. Turn the wheel by hand clockwise (when viewed from the pulley side) to check for interference.

8.7.4.2. Check the Purge Seal

If a purge is installed, check for a slight interference fit between the seal and the face of the wheel by sliding a piece of paper ("feeler gauge") between the seal and the media at multiple locations along the purge seal as you rotate the wheel slowly by hand (clockwise when viewed from the pulley side). Verify that the media slightly grabs the paper during rotation.

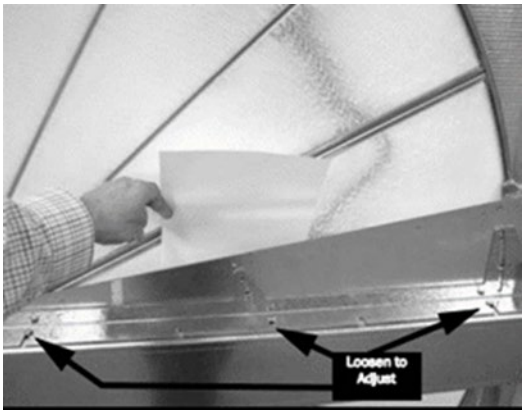

Figure 46: Adjusting Purge Seal

If it is necessary to adjust a purge seal to the face of the wheel, loosen the two or three screws along the bearing beam and adjust to the proper distance from the media surface. Tighten the screws and retest the seal.

8.7.4.3. Airflow Balancing and Checking

High-performance systems commonly have complex air distribution and fan systems. Unqualified personnel must not attempt to adjust fan operation or air circulation, as all systems have unique operational characteristics. Professional air balance specialists must be employed to establish actual operating conditions and to configure the air delivery system for optimal performance.

8.8. Controls

A variety of controls and electrical accessories may be provided with the equipment. Identify the controls on each unit by consulting the appropriate submittal or order documents and operate according to the control manufacturer's instructions. If you cannot locate installation, operation, or maintenance information for the specific controls, then contact your sales representative or the control manufacturer for assistance.

WARNING

Do not alter factory wiring. Deviation from the supplied wiring diagram will void all warranties and may result in equipment damage or personal injury. Contact the factory with wiring discrepancies.

8.9. Routine Maintenance and Handling

Handle cassettes with care. All cassettes must be lifted by the bearing support beam. Holes are provided on both sides of the bearing support beams to facilitate rigging as shown in the following illustration.

Routine maintenance of the Energy Recovery Cassettes includes periodic cleaning of the Energy Recovery Wheel as well as inspection of the Air Seals and Wheel Drive Components as follows:

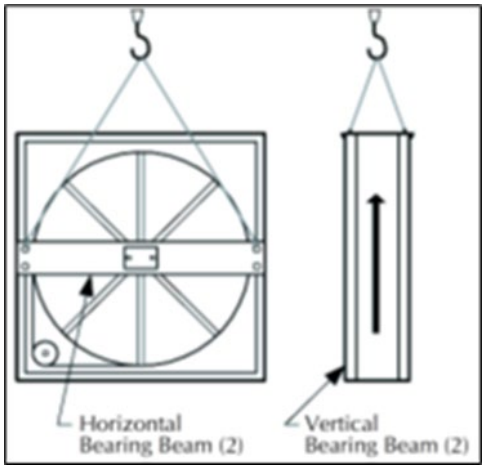

Figure 47: Loosen Adjusting Screws

8.9.1. Energy Recovery Wheel General Cleaning

Cleaning the energy transfer media will help maintain optimal performance. The frequency of cleaning is largely dependent on the application and air quality. Use ASHRAE's Classes of Air categories to create a routine cleaning schedule.

Class 1 air has a low contaminant concentration with an inoffensive odor and sensory irritation intensity.

Class 2 air has moderate contaminant concentration, with mildly offensive odors or sensory-irritation intensity.

Class 3 air has a significant contaminant concentration and significant offensive odor or sensory-irritation intensity.

Class 4 air has highly objectionable fumes or gases and potentially contains dangerous particles, bio-aerosols, or gases at a concentration high enough to be considered harmful, not suitable for recirculation or transfer to any other space.

Table 28: Energy Recovery Wheel Cleaning Frequency

Class of Air	Examples	Cleaning
Clean 1-Clean Air	• Offices • Classrooms • Assembly Rooms • Churches	Every 8-10 years
Class 2-Moderately Clean Air	• Restrooms • Swimming Pools • Dining Rooms • Locker Rooms • Warehouse • Dorms	Every 4-6 years
Class 3-Dirty Air	• Kitchens • Dry Cleaners • Beauty Salons • Laboratories • Pet Shops	Every 1-2 years
Class 4-Contaminated Air	• Paint Spray Booths • Laboratory Fume Exhaust • Kitchen Grease Exhaust	Do not use in this application

8.9.1.1. Energy Recovery Wheel General Cleaning (Continued)

The energy recovery wheel is "self-cleaning" with respect to dry particles due to its laminar flow characteristics. Smaller particles pass through; larger particles land on the surface and are blown clear as the flow direction is reversed. Any material that builds up on the face of the wheel can be removed with a brush or vacuum. The primary need for cleaning is to remove oil-based aerosols that have condensed on energy transfer surfaces.

A characteristic of all dry desiccants, such films can close off micron-sized pores at the surface of the desiccant material, reducing the efficiency by which the desiccant can adsorb and desorb moisture, and also build up so as to reduce airflow.

In a reasonably clean indoor environment, such as a school or office building, measurable reductions of airflow or loss of sensible (temperature) effectiveness may not occur for several years. Measurable changes in latent energy (water vapor) transfer can occur in shorter periods of time in applications such as moderate occupant smoking or cooking facilities. In applications experiencing unusually high levels of occupant smoking or oil-based aerosols, such as industrial applications involving the ventilation of machine shop areas, for example, annual washing of energy transfer may be necessary to maintain latent transfer efficiency. Proper cleaning of the energy recovery wheel will restore latent effectiveness to near the original performance.

To clean, gain access to the energy recovery wheel, and remove segments. Brush foreign material from the face of the wheel. Wash the segments or small wheels in a 5% solution of non-acid-based coil cleaner or alkaline detergent and warm water.

CAUTION

Do not use acid-based cleaners, aromatic solvents, steam, or temperatures in excess of 76.7°C (170°F) damage to the wheel may occur!

WARNING

Monolithic wheels with internal bearings must not be soaked to avoid corroding the bearings.

Note: Some staining of the desiccant may remain and is not harmful to performance.

Before removing, rapidly run a finger across the surface of the segment to separate the polymer strips for better cleaning action. Rinse the dirty solution from the segment and remove excess water before reinstalling it in the wheel.

8.10. Air Seals

Four adjustable diameter seals are provided on each cassette to minimize transfer of air between the counter flowing airstreams.

To adjust diameter seals, loosen diameter seal adjusting screws and back seals away from the wheel surface. Rotate the wheel clockwise until two opposing spokes are hidden behind the bearing support beam. Using a folded piece of paper as a feeler gauge, position the paper between the wheel surface and the diameter seals.

Adjust seals towards wheel surface until a slight friction on the feeler gauge (paper) is detected when gauge is moved along the length of the spoke. Retighten adjusting screws and recheck clearance with "feeler" gauge.

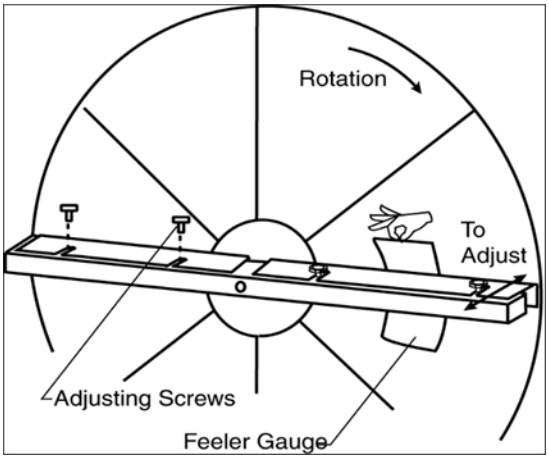

Figure 48: Diameter Seal Adjustment

8.11. Wheel Drive Components

The wheel drive motor bearings are pre-lubricated, and no further lubrication is necessary.

The wheel drive pulley is secured to the drive motor shaft by a combination of either a key or a D slot and a set screw.

The set screw is secured with removable Loctite to prevent loosening. Annually confirm that the set screw is secure. The wheel drive belt is a urethane stretch belt designed to provide constant tension through the life of the belt. No adjustment is required. Inspect the drive belt annually for proper tracking and tension. A properly tensioned belt will turn the wheel immediately after power is applied with no visible slippage during start-up.

8.12. Installation Considerations

Energy recovery cassettes are incorporated within the design of packaged units, packaged air handlers, and energy recovery ventilators. In each case, it is recommended that the following considerations be addressed:

8.12.1. Accessibility

The cassette and all its operative parts, i.e., motor, belt, pulley, bearings, seals, and energy transfer segments must be accessible for service and maintenance. This design requires that adequate clearance be provided outside the enclosure. Where cassettes are permanently installed in a cabinet, access to both sides of the cassette must be provided.

8.12.2. Orientation & Support

The Energy Recovery Cassette may be mounted in any orientation. However, Care must be taken to make certain that the cassette frame remains flat and the bearing beams are not racked.

To verify, make certain that the distance between wheel rim and bearing beam is the same at each end of the bearing beam, to within .64 cm (1/4 of an inch) (dimensions A & B). This amount of racking can be compensated for by adjusting the diameter seals.

If greater than .64 cm (1/4 of an inch) (dimension C), racking must be corrected to ensure that the drive belt will not disengage from the wheel.

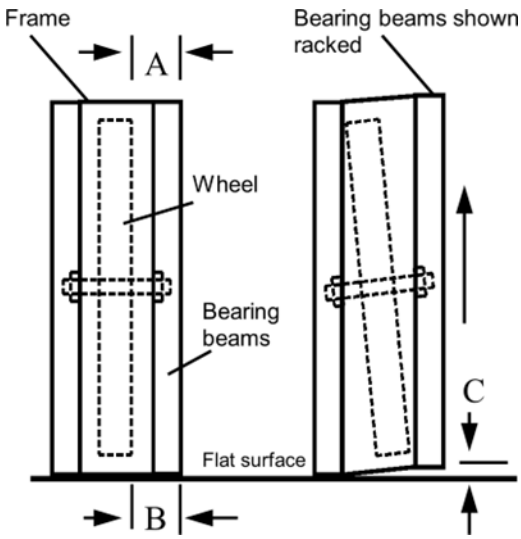

Figure 49: Avoid Racking of Cassette Frame

8.12.3. Operation

CAUTION

Keep your hands away from the rotating wheel! Contact with a rotating wheel can cause physical injury.

8.12.4. Startup Procedure

1. By hand, turn the wheel clockwise (as viewed from the pulley side), to verify wheel turns freely through a 360° rotation.
2. Before applying power to the drive motor, confirm wheel segments are fully engaged in the wheel frame and segment retainers are completely fastened. (See Segment Installation Diagram).
3. With hands and objects away from moving parts, activate the unit and confirm wheel rotation. The wheel rotates clockwise (as viewed from the pulley side).
4. If the wheel has difficulty starting, turn the power off and inspect for excessive interference between the wheel surface and each of the four (4) diameter seals. To correct, loosen the diameter seal adjusting screws and back adjustable diameter seals away from the surface of the wheel, apply power to confirm wheel is free to rotate, then re-adjust and tighten hub and diameter seals, as shown in the hub seal adjustment diagram.
5. Start and stop wheel several times to confirm seal adjustment and to confirm belt is tracking properly on wheel rim (approximately .64 cm [1/4 of an inch] from outer edge of rim).

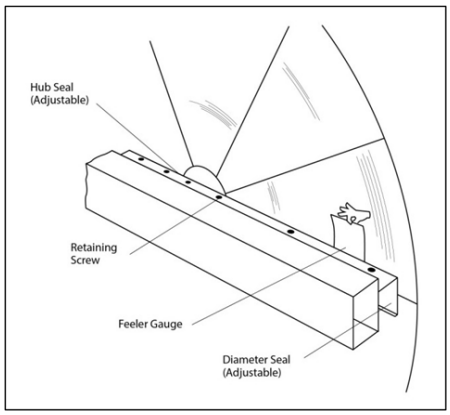

Figure 50: Hub Seal Adjustment

8.12.5. Service

CAUTION

Disconnect the electrical power before servicing the energy recovery cassette. Always keep your hands away from the bearing support beam when installing or removing segments. Failure to do so could result in severe injury to fingers or the hand.

8.12.6. Wheel Removal & Installation

To remove the wheel, follow these steps

1. Disconnect power to the wheel.
2. If possible, remove the wheel frame from the cabinet.
3. If a beam is present on the pulley side, remove the mounting screw from each end of the beam.

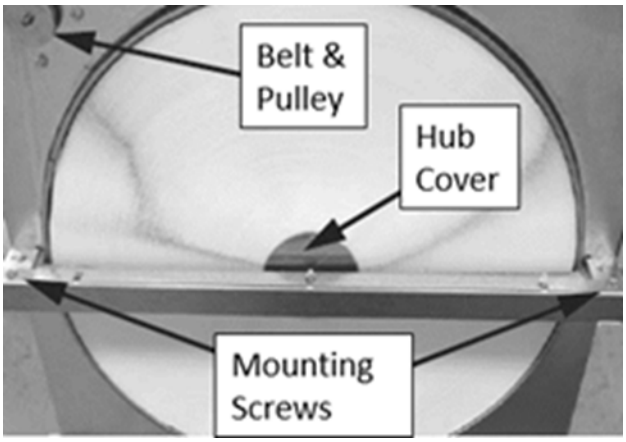

Figure 51: Wheel Removal

4. Remove the beam.
5. Remove the two hub cover screws.
6. Remove the center screw from the end of the wheel shaft.

Figure 52: Remove Center Screen from Wheel Shaft

7. Remove the belt from the wheel.
8. Remove the wheel from the frame.
9. To install the wheel, complete the previous 8 steps in reverse order.
10. Turn the wheel clockwise by hand (when viewed from the pulley side) and check operation.
11. Replace the frame in the cabinet and apply power to the system.
12. Observe the wheel operating under power.

8.12.7. Wheel Drive Motor and Pulley Replacement

1. Disconnect power to the wheel drive motor.
2. Remove the belt from the pulley and position it temporarily around the wheel rim.
3. Loosen the set screw in the wheel drive pulley using a hex head wrench and remove the pulley from the motor drive shaft.
4. While supporting the weight of the drive motor in one hand, loosen and remove (4) mounting bolts.
5. Install replacement motor with hardware kit supplied.
6. Install the pulley to the dimension as shown and secure the set screw to the drive shaft.
7. Stretch the belt over the pulley and engage it in the groove.
8. Follow the start-up procedure.

8.12.8. Belt Replacement

1. Obtain access to the pulley side bearing access plate if bearing access plates are provided. Remove two bearing access plate retaining screws and the access plate.
2. Using a hexagonal wrench, loosen the set screw in the bearing locking collar. Using a light hammer and drift (in the drift pin hole), tap the collar in the direction of wheel rotation to unlock the collar. Remove collar.
3. Using a socket wrench with an extension, remove two nuts which secure the bearing housing to the bearing support beam. Slide bearing from the shaft. If not removable by hand, use a bearing puller.
4. Form a small loop of the belt and pass it through the hole in the bearing support beam. Grasp the belt at the wheel hub and pull the entire belt down.

Note: Slight hand pressure against the wheel rim will lift the weight of the wheel from the inner race of bearing to assist bearing removal and installation.

CAUTION

Protect your hands and the belt from possible sharp edges of the hole in the Bearing Support Beam.

5. Loop the trailing end of the belt over the shaft (belt is partially through the opening).
6. Reinstall the bearing onto the wheel shaft, being careful to engage the two locating pins into the holes in the bearing support beam. Secure the bearing with two self-locking nuts.
7. Install the belts around the wheel and pulley according to the instructions provided with the belt.
8. Reinstall diameter seals or hub seals and tighten the retaining screws. Rotate wheel in clockwise direction to determine that wheel rotates freely with slight drag on seals.
9. Reinstall bearing locking collar. Rotate collar by hand in the direction the wheel rotates (see label provided on each cassette for wheel rotation).
10. Lock in position by tapping drift pin hole with hammer and drift. Secure in position by tightening set screw.
11. Reinstall Bearing Access Cover.
12. Apply power to the wheel and ensure that the wheel rotates freely without interference.

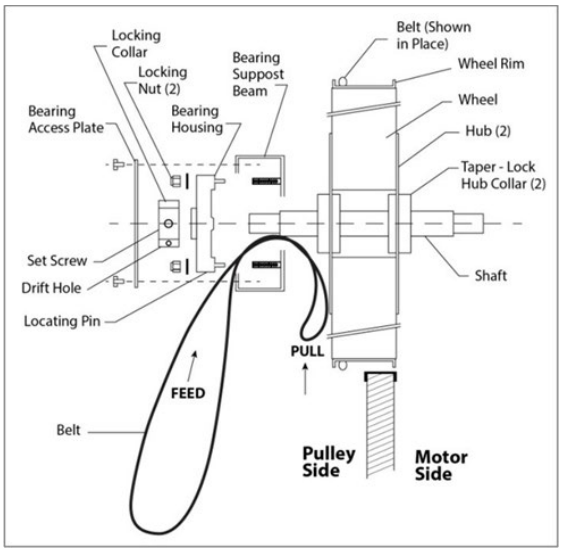

Figure 53: Belt Replacement

8.13. Gas or Electric Heating

The unit is designed to heat a given amount of air while operating. If this amount of air is greatly reduced, approximately 1/3 during the heating season, the gas heat exchanger or electric heating coil may overheat, and may cut the burner or heater off entirely by action of the safety high temperature limit devices which are factory mounted at the heat exchanger and supply fan areas.

Airflow must be adjusted after installation to obtain an air temperature rise within the range specified on the unit rating plate at the required external static pressure.

If overheating occurs with a gas heat exchanger, or if the gas supply fails to shut off, shut off the manual gas valve to the furnace before shutting off the electrical supply.

Prolonged overheating of the heat exchanger will shorten its life.

If the unit has not been selected as a 100% outside air unit (makeup air unit), the return air duct must be sealed to the unit, and the return air temperature must be maintained between 12.8°C (55°F) and 26.7°C (80°F).

Table 29: Electric and Gas Heating Capacities

Model Option B2	Gas Heat		Electric Heat Capacity	
	Input Capacity	Output Capacity		
	MBH	MBH	kW (208V)	kW (230V, 380V, 460V, 575V)
1 = Heat 1	60.0	48.6	7.5	10
2 = Heat 2			15.0	20
3 = Heat 3	100.0	81.0	22.5	30
4 = Heat 4			30.0	40
5 = Heat 5	140.0	113.4		
6 = Heat 6				
7 = Heat 7	160.0	129.6		

Table 30: Auxiliary Electric Heating Capacities

Feature 3	kW (208)	kW (230V, 380V, 460V, 575V)
*K = Heat K	7.5	10.0
*L = Heat L	15.0	20.0
*M = Heat M	22.5	30.0
*N = Heat N	30.0	40.0

8.14. Electric Preheat

WARNING

For Your Safety:
Read the entire gas heating installation section of this manual before beginning installation of the gas heating section.

If you do not follow these instructions exactly, a fire or explosion may result causing property damage, personal injury, or loss of life.

Verify the unit nameplate agrees with the proper gas supply type and amount.

Gas piping shall be installed in accordance with local codes, or in the absence of local codes, installation shall conform to the current (United States) National Fuel Gas Code, ANSI-Z223.1/NFPA 54 or the current (Canada) National Fuel & Propane Installation Code, CSA B149.1 or B149.2.

After verifying gas inlet pressure and manifold pressure the service technician shall time the gas flow rate through the gas meter with a stopwatch to verify the gas input rate. The unit's nameplate input rate value is calculated based on the altitude where the unit was shipped. Units installed at an elevation less than 610 meters (2000 feet) above sea level require no derating. At 610 meters (2000 feet) above sea level, a 4% derate adjustment must be applied to the standard input rate. For every additional 305 meters (1000 feet), there is an additional 4% derate adjustment. For example, at 914 meters (3000 feet) above sea level, the derate adjustment for elevation would be 8%, resulting in a new heat exchanger rate of 92% of the standard input rate listed.

Table 31: 2-5-Ton Gas Connections

Cabinet Size	Staging	Capacity (MBH)	Gas Valve QTY	Valve 1 Size	Valve 2 Size
RQ	1, 2, MOD	60	1	1/2"	-
	4, HITD		2	1/2"	1/2"
	1, 2, MOD	100	1	1/2"	-
	4, HITD		2	1/2"	1/2"
	1, 2, MOD	140	1	1/2"	-
	4, HITD		2	1/2"	1/2"
	1, 2, MOD	160	1	1/2"	-
	4, HITD		2	1/2"	1/2"

Note: MOD=Modulating, HITD=High Turndown, ½" = 12.7mm

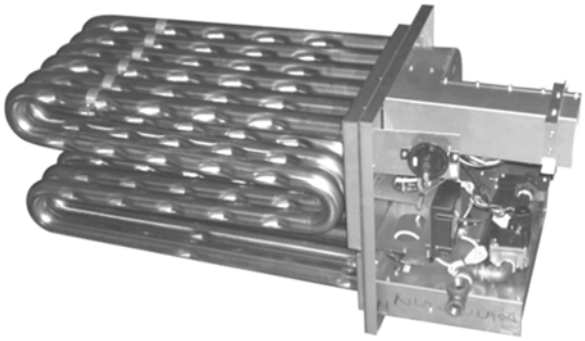

Figure 54: RQ Series Gas Heat Exchanger

Table 32: (Metric) Natural Gas Maximum Piping Capacities (M^3/HR)

Pipe Size (mm)	Length of Pipe				
	6.1 m	15.2 m	30.4 m	45.6 m	60.8 m
12.7	3.4	2	1.4	1.1	1
19	7	4.2	2.9	2.4	2
25.4	13	8	5.5	4.5	3.8
31.75	26.9	16.4	11.3	9.2	7.9
38.10	41.3	25.5	17.6	14.2	12.2
50.80	77.9	47.6	32.6	26.9	22.7
63.50	123.2	75.0	52.4	42.5	36.2

Note: Specific Gravity = 0.6, Supply Pressure ≤ 3.5 kPa, Pressure Drop = 0.93 mmHg

Table 33: (Imperial) Natural Gas Maximum Piping Capacities (Ft^3/HR)

Pipe Size (mm)	Length of Pipe				
	20 ft	50 ft.	100 ft.	150 ft.	200 ft.
1/2"	120	73	50	40	35
3/4"	250	151	103	84	72
1"	465	285	195	160	135
1-1/4"	950	580	400	325	280
1-1/2"	1460	900	620	500	430
2"	2750	1680	1150	950	800
2-1/2"	4350	2650	1850	1500	1280

Note: Specific Gravity = 0.6, Supply Pressure ≤ 0.5 psi, Pressure Drop = 0.93" w.c.

Table 34: (Metric) Propane (KW) Maximum Piping Capacities

Pipe Size (mm)	Length of Pipe				
	6.1 m	15.2 m	30.4 m	45.6 m	60.8 m
12.7	0.6	0.4	0.3	0.2	0.2
19	1.3	0.8	0.6	0.5	0.4
25.4	2.5	1.5	1.0	0.9	0.7
31.75	438.1	266.7	184.6	149.5	127.5
38.10	672.6	414.7	285.7	230.1	194.9
50.80	1269.0	775.2	530.5	438.1	375.1
2-1/2"	4350	2650	1850	1500	1280

Note: Specific Gravity = 1.52, Supply Pressure = 2.34 kPa, Pressure Drop = 0.93 mmHg

Table 35: (Imperial) Propane (KBTU/HR0 Maximum Piping Capacities

Pipe Size (mm)	Length of Pipe				
	20 ft	50 ft.	100 ft.	150 ft.	200 ft.
1/2"	189	114	78	63	55
3/4"	393	237	162	132	112
1"	732	448	307	252	213
1-1/4"	1496	913	630	511	440
1-1/2"	2299	1417	976	787	675
2"	4331	2646	1811	1496	1260

Note: Specific Gravity = 1.52, Supply Pressure = 11" w.c., Pressure Drop = 0.5" w.c.

Do not use gas piping smaller than the unit gas connections. Natural gas pipe runs longer than 6.1 meters (20 feet) and propane gas pipe that runs longer than 15.2 meters (50 feet) may require a larger supply pipe than the unit connection size. Some utility companies may also require pipe sizes larger than the minimum sizes listed.

8.14.1. Piping Sizing Examples

A 100 ft pipe run is needed for a 1080 MBH natural gas heater. The natural gas has a rating of 1000 Btu/ft3 and a specific gravity of 0.6 (Obtain these values from the local gas supplier.)

$$1080\ MBH\ \times \frac{ft^3}{1000 Btu} = 1080\ ft^3/hr$$

For the natural gas maximum capacities table, at 100 ft and 1080 ft^3/hr, the required minimum pipe size is 2".

A 100 ft pipe run is needed for a 270 MBH propane gas heater.

270 MBH = 270 kBtu/hr

From the propane gas maximum capacities table, at 100 ft and 270 kBtu/hr, the required minimum pipe size is 1".

8.14.2. Inlet and Manifold Pressures

For natural gas units, the minimum inlet gas pressure to the unit is 11.2 mmHg (6" w.c.), and the maximum inlet gas pressure to the unit is 19.6 mmHg (10.5" w.c.).

For propane units, the minimum inlet gas pressure to the unit is 20.6 mmHg (11" w.c.) and the maximum inlet gas pressure to the unit is 24.3 mmHg (13" w.c.). A field provided 0.3 cm (1/8") NPT pressure tap is required to be installed in the piping just upstream of the shutoff valve for test gage connection to allow checking of the gas supply pressure at the unit.

A factory installed pressure tap on the outlet end of the gas valve can be used to verify a manifold pressure of 6.5 mmHg (3.5" w.c.) for natural gas, or 19.6 mmHg (10.5" w.c.) for propane.

For two stage gas valves, the low stage setting shall be set at 2.1 mmHg (1.1" w.c.) for natural gas, 9.34 mmHg (5.0" w.c.) for propane. For modulating heaters, the safety shut-off valve would be set following the instructions above, then from a provided pressure tap in the gas train immediately preceding the burner manifold, the modulating valve is set to maintain a maximum of 6.5 mmHg (3.5" w.c.) and a minimum of .75 mmHg (0.4" w.c.).

CAUTION

The heater shall be disconnected from the gas supply piping during pressure testing of the supply piping system with pressures in excess of 3.5 kPa (½ psi). Gas valves can be damaged if subjected to more than 3.5 kPa (½ psi).

8.14.3. Gas Pressure Regulator and Overpressure Protection Device

A gas pressure regulator shall be installed if natural gas supply pressure to the unit is greater than 19.6 mmHg (10.5" w.c.) and less than 13.8 kPa (2 psi) (103.5 mmHg [55.4" w.c.]), and if propane gas supply pressure is greater than 24.3 mmHg (13" w.c.) and less than 13.8 kPa (2 psi) (103.5 mmHg [55.4" w.c.]). Regulators shall comply with the latest edition of the Standard for Line Pressure Regulators, ANSI Z21.80/CSA 6.22.

Both a gas-pressure regulator and an overpressure protection device (OPD) shall be installed if the gas supply pressure to the unit is greater than 13.8 kPa (2 psi) (103.5 mmHg [55.4" w.c.]) and less than 34.5 kPa (5 psi) (258.57 mmHg [138.4" w.c.]), in compliance with ANSI Z21.80/CSA 6.22. For proper heater operation, pressure to the regulator shall not be greater than 34.5 kPa (5 psi) (258.57 mmHg [138.4" w.c.]).

8.14.3.1. Piping Supports

Gas supply piping shall be supported directly at the connection to the unit and at intervals listed in the following table with metal straps, blocks, or hooks. Piping shall not be strained or bent.

Table 36: Gas Piping Supports (Metric)

Pipe Size	Support Intervals
12.7 to 19.1	Every 1.8 m
19.1 to 25.4	Every 2.4 m
44.5 or Larger (Horizontal)	Every 3 m
31.75 or Larger (Vertical)	Every Floor

Table 37: Gas Piping Supports (Imperial)

Pipe Size	Support Intervals
1/2" to 3/4"	Every 6 ft
3/4" to 1"	Every 8 ft
1-3/4" or Larger (Horizontal)	Every 10 ft
1-1/4" or Larger (Vertical)	Every Floor

8.14.3.2. Additional Gas Piping Considerations

Local codes will usually require a field provided and installed manual main shutoff valve and union external to the unit. The main shutoff valve shall be labeled. A drip leg shall be installed near the unit connection to trap sediment and condensate. Pipe joint compounds used on all gas piping connections shall be resistant to liquid petroleum gases. If flexible gas piping to the unit, or in the unit, must be replaced, connectors cannot be reused; only new connectors may be used.

Heat exchanger comes equipped with a condensate drain, which shall be plumbed to the appropriate drain according to the (United States) National Fuel Gas Code ANSI-Z223.1/NFPA 54 or the current (Canada) National Fuel & Propane Installation Code CSA B149.1 or B149.2, the International Building Code, and any applicable local and regional codes and regulations.

The condensate drain connection is located next to the gas entry location. The heat exchanger condensate drain connection from the unit is a 16 mm (5/8") barbed nylon elbow connection.

AAON gas fired heat exchangers are designed to be non-condensing. These heat exchangers are mounted downstream of the cooling coils. During the cooling season, the ambient air inside the heat exchanger tubes can condense due to cold air being blown over the outside of the tubes. The amount of condensation will vary depending on the ambient air temperature and humidity, as well as the air temperature over the tubes. This condensation can be drained onto the roof or into any waste drain.

Typically, during the heating season, the heat exchanger does not make any condensation. Short cycling the heater, however, can prevent the flue gases from reaching temperatures above the dew point (about 54.4°C [130°F]), which can cause condensation in the heat exchanger.

Staged or modulated heat exchangers may produce condensate, depending on the firing rate, ambient air temperature, and humidity, as well as the percentage and temperature of outside air being introduced to the unit. This condensate is generally between a 2.9 and 4 pH level.

Condensation in the heat exchanger during the heating mode may need to be managed and not just drained onto the roof, depending on national and local code requirements and the application of the final user. This condensate can stain the roof and can cause rust in some cases on metal roofs. A qualified technician must determine if the condensate will damage the roofing material before unit startup.

Below freezing ambient air temperatures during the heating mode can freeze any condensation made in the drain lines. Smaller amounts of condensation may not cause any issues, but for larger amounts of condensate and low ambient air temperatures (below freezing for multiple consecutive days), the internal and external drain lines for the unit will need to be heat-traced to prevent freezing. Heat traced internal drain lines are required and a factory provided standard feature on the condensate drain with the high turndown modulating gas option.

A condensate neutralizer vessel and connecting tubing can be added to the equipment if required. For below freezing ambient temperature applications, the neutralizer, connecting tubing, and drain lines will require heat tracing to prevent condensate freezing. It must be determined by a qualified technician if these components are necessary before unit startup.

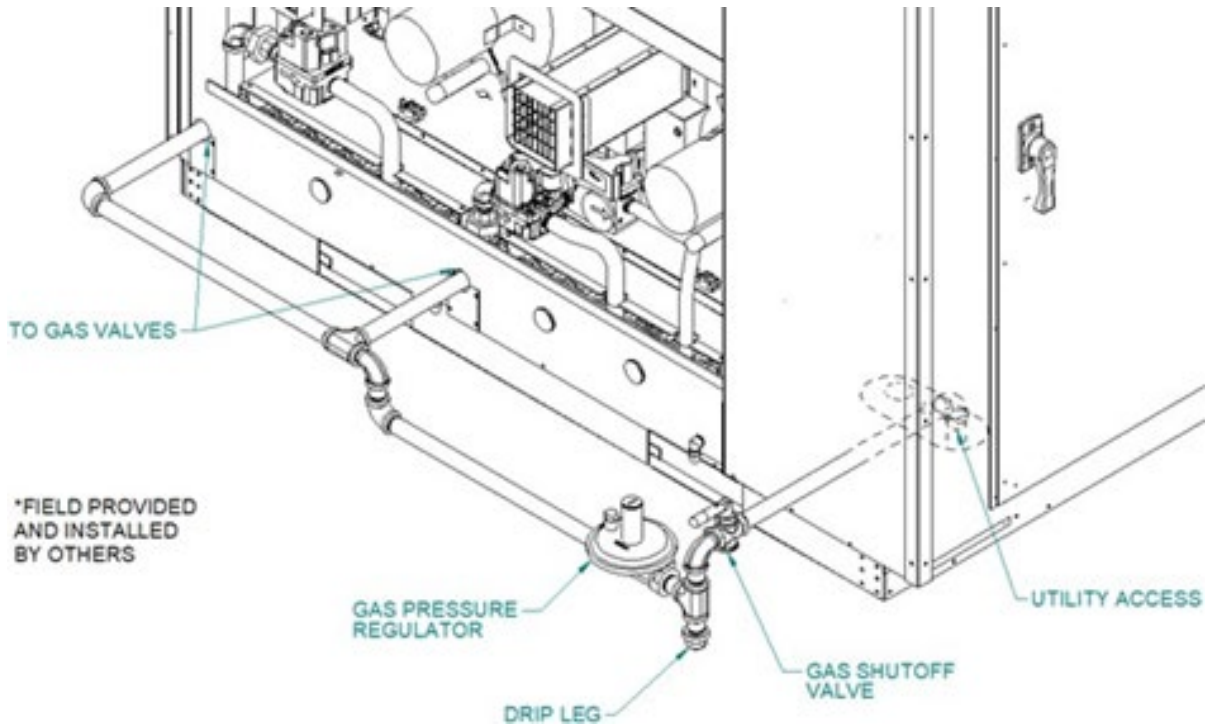

Figure 55: RQ Series Gas Heat Exchanger

8.15. Leak Testing

All components of the gas supply system, including manual shut off valves and the piping in the interior of the unit, must be leak tested. At a minimum, the "Bubble Leak Test" must be performed before operating the appliance, as well as on an annual basis thereafter, if not more frequently. All leak testing must be performed in accordance with this instruction manual as well as in accordance with the National Fuel Gas Code NFPA 54/ ANSI-Z223.1, CSA B149.1 (Canada), and local codes as applicable.

8.15.1. Bubble Leak Testing

The test is performed using a soap solution leak detector solution. With electrical power to the unit terminated and the gas supply to the unit within the specified pressures provided in this IOM, the solution is sprayed at each threaded connection of the gas supply piping to the unit and the internal gas train of the unit. Each connection is observed for bubbles, which indicate leaks in the connection. Joints with bubbles appearing during the check must be inspected for thread engagement and/or damage and tightened as needed.

WARNING

Leak Check Gas Pipe:
The gas pipe in the unit shall be checked for leaks before operation and startup. The unit must not be placed in operation until a leak check has been conducted for all gas piping connections. All connections shall be checked for leaks annually after installation. Gas leaks could result in fire, explosion, or other hazardous situations.

WARNING

Do not use an open flame or other source of ignition for leak testing. A fire or explosion could result causing property damage, personal injury, or death.

CAUTION

Some soaps used for leak detection can be corrosive to certain metals. Rinse piping thoroughly after the leak test has been completed.

All gas fired heat exchangers are completely tested at the factory before shipment. This will remove nearly all of the oils that have been used in the manufacturing process. However, trace amounts may remain. When performing the initial startup at the jobsite, it is highly recommended that people or any other living animals, which may be sensitive to the residual odors or gases, NOT be present in the conditioned space during the startup. In all cases, including the initial factory firing and testing, any of the gases will be under the acceptable level of concentration for human occupancy.

WARNING

Those sensitive to odors or gases from trace amounts of residual oils shall NOT be present in the conditioned space during the startup of a gas fired installation.

8.16. Gas Heater Operating Instructions

WARNING

If you do not follow these instructions, a fire or explosion may result, causing property damage, personal injury, or loss of life

This appliance does not have a pilot. It is equipped with an ignition device that automatically lights the burner. Do NOT try to light the burner by hand.

Before operating, smell all around the appliance area for gas. Be sure to smell next to the floor because some gases are heavier than air and will settle on the floor.

What To Do If You Smell Gas

- Do not try to light the appliance.
- Do not touch any electric switch; do not use any phone in the building.
- Immediately call your gas supplier from a neighbor's phone. Follow the gas supplier's instructions.
- If you cannot reach your gas supplier, call the fire department.

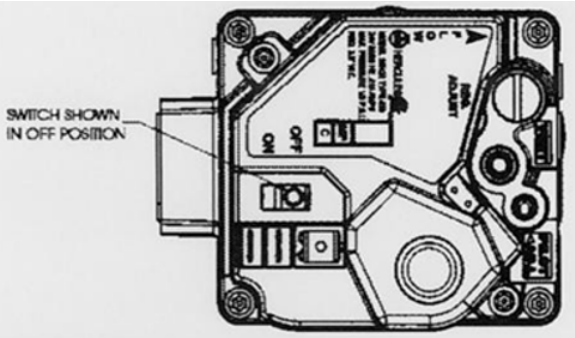

Figure 56: Switch in the Off Position

Only use your hand to move the on/off switch.

Do not use this appliance if any part has been underwater. Immediately call a qualified service technician to inspect the appliance and to replace any part of the control system and any gas control that has been underwater.

Operating Instructions

1. Set the thermostat to the lowest setting.
2. Turn off all electric power to the appliance.
3. This appliance is equipped with an ignition device that automatically lights the burner. Do not try to light the burner by hand.
4. Remove the control access panel.
5. Move the on/off switch to the "OFF" position.
6. Wait five minutes to clear out any gas. If you then smell gas, STOP! Follow the procedure listed in the "What To Do if You Smell Gas" section to the left. If you do not smell gas, proceed to the next step.
7. Move the on/off switch to the "ON" position.
8. Replace the control access panel.
9. Turn on all electric power to the appliance.
10. Set the thermostat to the desired setting.
11. If the appliance will not operate, follow the instructions below and call your service technician or gas supplier.

To Turn Off the Gas to the Appliance

1. Set the thermostat to the lowest setting.
2. Turn off all electric power to the appliance if service is to be performed.
3. Remove the control access panel.
4. Move the on/off switch to the "OFF" position.
5. Replace the control access panel.

8.16.1. Gas Heating Maintenance

WARNING

Once a year, before the unit is in operation for the heating season, a qualified service technician shall inspect all flue product carrying areas of the furnace and main burners for continued safe operation.

WARNING

Leak Check Gas Pipe:
The gas pipe in the unit must be checked for leaks before operation and startup. The unit must not be placed in operation until a leak check has been conducted for all gas piping connections. All connections shall be checked for leaks annually after installation. Failure to leak check could result in fire, explosion, or other hazardous situations.

Make sure all gas supply lines have been purged of air before turning on the electrical power switch. Turn the gas valve to the on position (see startup instructions). Turn the main electrical power on and set the controls to the heating mode of operation.

The combustion ventilation motor must operate. The control will automatically supply energy to the igniter and the gas valve after the heating call is made.

The flame sensing probe detects the presence of the flame. Should no flame be detected in 10 seconds, the ignition system will recycle. If no flame is detected after 3 tries, ignition system will lockout.

Remove the call for heating. The main gas valves shall be extinguished.

The supply fans are controlled by the ignition system. In the fan "Auto" mode the fan comes on 45 seconds after the flame is proved and goes off 120 seconds after the heating call is removed.

Furnace combustion ventilation air and flue openings shall be checked annually for debris and obstructions. If vent extensions are used they shall meet category III requirements.

This appliance contains a wire screen at the vent outlet. Each heating season, prior to placing the appliance in heat mode maintenance check that no debris or foreign matter has accumulated in the vent outlet. A good practice is to check for debris each time the air filters are changed.

In the event the vent outlet becomes blocked do not attempt to start the appliance in heat mode until the entire vent opening is cleared.

In the event the unit shut down because the vent was blocked a qualified technician or service agency shall monitor the unit prior to re-starting.

The gas burner and heat exchanger should never require cleaning. If cleaning is necessary, this indicates faulty operation of the unit. Cleaning shall only be done by a qualified service agency and only after consultation with an AAON service representative.

If induced draft blower/motor assembly has to be replaced, care shall be taken to provide an airtight seal between the blower housing and the burner box.

8.16.2. Gas Heat Exchanger Removal

WARNING

Electric shock hazard. Shut off all electrical power to the unit to avoid shock hazard or injury from rotating parts.

8.16.2.1. Removal

Verify that the unit power has been switched off. Disconnect all wiring on the heat exchanger.

Shut off all gas valves to the unit.

Remove the screws on the plate below the door covering the pipes exiting the heat exchanger.

Remove screws around the perimeter of the heat exchanger face plate that connect it to the unit. Only the outermost screws must be removed.

Pull the heat exchanger straight back and out of the unit. It may be necessary to remove some of the control door jambs.

8.16.2.2. Reinstallation

Ensure that the neoprene isolator is installed around the perimeter of the heat exchanger.

Insert the heat exchanger into the opening so that the back of the main plate is against the unit bulkhead.

Attach the heat exchanger to the bulkhead using the holes around the perimeter.

Connect the wiring per the wiring diagram on the controls compartment door.

Purge the gas lines to the gas valves at the unit.

Reattach the plate over the exterior piping.

WARNING

Leak Check Gas Pipe:
The gas pipe in the unit must be checked for leaks before operation and startup. The unit must not be placed in operation until a leak check has been conducted for all gas piping connections. All connections shall be checked for leaks annually after installation. Failure to leak check could result in fire, explosion, or other hazardous situations.

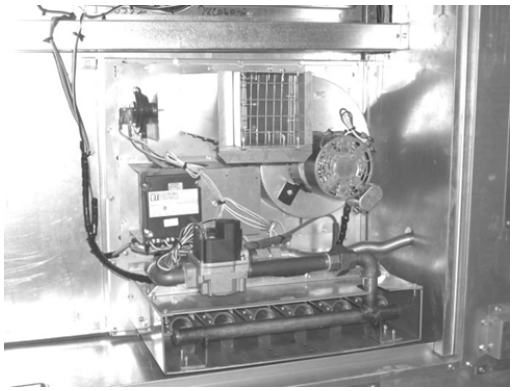

Figure 57: Gas Heat Exchanger

8.17. Phase and Brownout Protection Module

Figure 58: Brownout Protection Module

The DPM is a Digital Phase Monitor that monitors line voltage from 200 VAC to 240 VAC 1Ø and 200VAC to 600VAC 3Ø. The DPM is 50/60 Hz self-sensing. DPM must be wired according to unit specific wiring diagram included in the control compartment.

When the DPM is connected to the line voltage, it will monitor the line, and if everything is within the setup parameters, the output contacts will be activated. If the line voltages fall outside the setup parameters, the output relay will be de-energized after the trip delay.

Once the line voltages recover, the DPM will re-energize the output relay after the restart time delay. All settings and the last 4 faults are retained, even if there is a complete loss of power.

8.17.1. DPM Setup Procedure

With the supply voltage active to the module, you can set up all of the DPM's settings without the line voltage connected.

To change the setpoint parameters use the right arrow key to advance forward through the setpoint parameters and the left arrow to backup if needed. When each parameter is displayed use the up/down keys to change and set the parameter.

After adjustments are made, or if no adjustments are made, it will take 2 to 4 minutes before the DPM energizes the output relay unless there is an out-of-tolerance issue with the incoming line voltage.

8.17.1.1. Recommended Default Set-up

- Line Voltage: 460VAC, 3Ø
- Over & Undervoltage: ±10%
- Trip Time Delay: 5 Seconds
- Re-Start Time Delay: 2 Minutes
- Phase Imbalance: 5%

Figure 59: Phase and Brownout Module

The phase and brownout module may be of this type on some products (as seen in the above picture). No setup is needed with this module version, other than checking that the voltage jumper voltage matches the unit voltage.

9. SCREEN

9.1. Manufacturer's Screen

R-K Electronics

DPM v0.0.00

Default - the default screen shows the real-time voltage detected in each of the following phases:

A-B	B-C	C-A	
460	459	461	ON

VAvg	Imb	Hz	
460	459	461	ON

Table 38: Voltage Selection Screen (Vertical Format) - Default = 460V, 3Ø

200, 1Ø	208, 1Ø	220, 1Ø	230, 1Ø	240, 1Ø			
200, 3Ø	208, 3Ø	220, 1Ø	230, 1Ø	240, 1Ø	380, 3Ø	415, 3Ø	440, 3Ø
460, 3Ø	480, 3Ø	575, 3Ø	600, 3Ø				

Table 39: Over/Under Voltage Percentage Screen (Vertical Format) - Default = 10%

7%	8%	9%	10%	11%	12%	13%	14%	15%

Table 40: Trip Time Delay Screen (Vertical Format) - Default = 5 sec

2 Sec	3 Sec	4 Sec	5 Sec	6 Sec	7 sec	8 Sec	9 Sec	10 Sec

Table 41: Re-Start Time Delay Screen (Vertical Format) - Default = 2 sec

Manual	2 Sec	3 Sec	4 Sec	5 Sec	6 Sec	7 Sec	8 Sec	9 Sec	10 Sec	30 Sec	1 Min	2 Min	3 Min	4 Min

Table 42: Phase Imbalance Percentage Screen (Vertical Format) - Default = 5%

3%	4%	5%	6%	7%	8%	9%	10%

Fault Screen (Vertical Format)

"0" most recent faults, "1" previous fault, "2" third oldest fault, & "3" fourth oldest fault.

Fault Words:

Fault Words	Descriptions
"Phase a Loss"	There is no voltage sensed on 3-L1/S
"Voltage Low"	Average line voltage is less than the selected Undervoltage Percentage
"Voltage High"	Average line voltage is more than the selected Overvoltage Percentage
"Imbalance"	One phase is lower than the average voltage of the mother, and the imbalance percentage
"Phase Loss"	One phase is more than 30% below the Line Voltage selection
"Bad Rotation"	The phase rotation sequence is reversed
"Bad Freq"	Line frequency out of the allowable range of 45 to 65 Hz

9.2. Filter Replacement

Monthly air filter inspection is required to maintain optimum unit efficiency.

WARNING

Electric shock hazard. Shut off all electrical power to the unit to avoid shock hazard or injury from rotating parts.

It is strongly recommended that filter media be replaced monthly. Filters are located upstream of the evaporator coil in the filter and economizer section. Open the access door and pull filters straight out to inspect all of the filters. Replace filters with the size indicated on each filter or as shown in the tables below. The arrow on the replacement filters must point towards the blower. (PE = Power Exhaust).

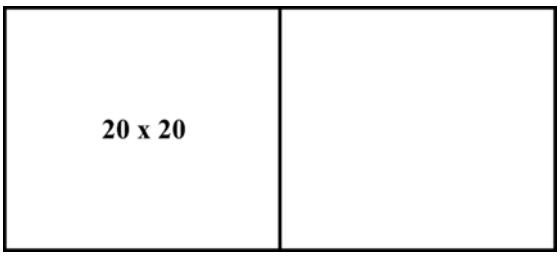

Figure 60: RQ Series 2-5-Ton Standard Filter Layout (Viewed on the Upstream Side of the Cooling Coil)

Table 43: RQ Series 2-5-Ton Pre-filters

Feature 6A	Quantity / Size	Type
0	No Pre Filters	
A, E	2/20 in. x 20 in. x 2 in. (50.8 cm x 50.8 cm x 5.1 cm)	Pleated, MERV 8
B, E	1/16 in. x 20 in.x1 in. (40.6 cm x 50.8 cm x 2.5 cm)	Metal Mesh, Outside Air
C	1/19.5 in. x 39 in. x 5/16 in. (49.5 cm x 99 cm x 0.8 cm)	Lint Screen

Table 44: RQ Series 2-5-ton Unit Filters

Feature 6B	Quantity / Size	Type
0	2/20 in. x 20 in. x 2 in. (50.8 cm x 50.8 cm x 5.1 cm)	Pleated, MERV 8
B	2/20 in. x 20 in. x 4 in. (50.8 cm x 50.8 cm x 10.2 cm)	Pleated, MERV 8
C	2/20 in. x 20 in. x 2 in. (50.8 cm x 50.8 cm x 5.1 cm)	Permanent Filter Frame - Replaceable Media
F	2/20 in. x 20 in. x 4 in. (50.8 cm x 50.8 cm x 10.2 cm)	Pleated, MERV 11
G		Pleated, MERV 13
H		Pleated, MERV 14

Table 45: RQ Series 2-5-Ton Energy Recovery Wheel Filters

Feature 1A	Quantity/Size	Type
F, G, H, J (Energy Recovery Wheel)	1/24 in. x 12 in. x 2 in. (61 cm x 30.5 cm x 5.1 cm)	Pleated, MERV 8
	With Energy Recovery Exhaust Air Filters, Feature 6A - D, F, G, H OA - 1 / 24 in. x 12 in. x 2 in. (61 cm x 30.5 cm x 5.1 cm) EA - 1 / 24 in. x 12 in. x 2 in. (61 cm x 30.5 cm x 5.1 cm)	
Q, R, S, T, U, V, W, Y (Fixed Plate Energy Recovery)	1 / 24 in. x 24 in. x 2 in. (61 cm x 61 cm x 5.1 cm)	
	With Energy Recovery Exhaust Air Filters, Feature 6A - D, F, G, H EA - 1 / 24 in. x 24 in. x 2 in. (61 cm x 61 cm x 5.1 cm)	

9.3. Replacement Parts

Parts for AAON equipment may be obtained from your local AAON representative. Reference the unit serial number and part number when ordering parts.

9.3.1. Contact Information

AAON
Warranty, Service and Parts Department 2425 S. Yukon Ave.
Tulsa, OK 74107

Ph: 918-382-6450
techsupport@AAON.com
www.AAON.com

Note: Before calling, the technician must have the model and serial number of the unit available for the service department to help answer questions regarding the unit.

9.4. Decommissioning

Before decommissioning the unit, ensure you are familiar with the unit and its operation. Only individuals qualified to handle refrigerant may remove the charge from the unit. The unit must be isolated electrically before beginning any decommissioning work. Proper PPE is required

Ensure any equipment that may be needed for handling refrigerant cylinders safely is available. Equipment and cylinders used for recovery must be in good working order and comply with appropriate standards.

Operate the recovery machine in accordance with the instructions. Remove refrigerant from all parts of the refrigeration system. On heat pumps, refrigerant must be recovered from discharge, suction, and common liquid lines.

Weigh out refrigerant when removing to ensure that all refrigerant is removed and cylinders are not overfilled. Place the refrigerant cylinder on the scales before beginning the recovery process. Do not exceed the maximum pressure of the cylinder.

When recovery is completed, remove all cylinders containing recovered refrigerant from the site. Ensure all isolation valves on the equipment are closed and all warning decals are still visible on the unit. Label the unit as having been decommissioned, and data and sign label.

10. WARRANTY

Refer to the Limited Warranty Certificate for the unit's warranty details. Contact an AAON representative for a unit-specific copy of the certificate for the unit's serial number.

AAON

Limited Warranty Certificate

GENERAL CONDITIONS

FOR OPTIONAL FIVE YEAR EXTENDED LIMITED WARRANTY OF RN or RQ PRODUCTS

FOR OPTIONAL TEN YEAR EXTENDED LIMITED WARRANTY OF RN or RQ PRODUCTS

FOR OPTIONAL FIVE YEAR EXTENDED LIMITED WARRANTY OF RN OR RQ ECONOMIZER WITH FAULT DETECTION AND DIAGNOSTICS

EXTENDED LIMITED WARRANTY OF GAS FIRED HEAT EXCHANGERS

FOR RQ OR RN ALUMINIZED STEEL HEAT EXCHANGERS

FOR RQ, RN, OR RZ STAINLESS STEEL HEAT EXCHANGERS

FOR RL SERIES HEAT EXCHANGERS

EXTENDED LIMITED WARRANTY ON COMPRESSORS INCLUDED IN SINGLE PACKAGE EQUIPMENT (NOT INCLUDING CHILLERS) OR AVAILABLE OPTIONAL ON OTHER EQUIPMENT

EXTENDED LIMITED WARRANTY OF WWW PRODUCTS

EXTENDED LIMITED WARRANTY OF RQ PRODUCTS

FOR OPTIONAL TWO YEAR EXTENDED LIMITED WARRANTY OF RN PRODUCTS

FOR OPTIONAL FIVE YEAR EXTENDED LIMITED WARRANTY OF COIL COATING

1 of 2

AAON

Limited Warranty Certificate

OTHER CONDITIONS

DISCLAIMERS OF WARRANTIES

SEVERABILITY

EQUIPMENT INFORMATION (REQUIRED)

Job Name:

Sales Order Number:

Unit Tag:

Date of Shipment:

Serial Number:

Unit Model Number:

2 of 2

11. APPENDIX A - HEAT EXCHANGER CORROSION RESISTANCE

Corrosion Resistance of Copper and Stainless-Steel in Brazed Plate Heat Exchangers - Points to Measure and Check in a Water Analysis

The resistance guide provides the corrosion resistance of stainless-steel type AISI 316 and pure Copper (99.9%) in water, to a number of important chemical factors. The actual corrosion is a very complex process influenced by many different factors in combination.

Explanations:

- [+] Good resistance under normal conditions
- [0] Corrosion problems may occur especially when more factors are valued 0
- [-] Use is not recommended

Table 46: Corrosion Resistance

Water Containing	Concentration (mg/L or ppm)	Time Limits - Analyze Before	AISI 316	SMO 254	Copper Alloy	Nickel Alloy
Alkalinity (HCO_3^-)	< 70	Within 24 Hours	+	+	0	+
	70-300		+	+	+	+
	> 300		+	+	0/+	+
Sulfate ($SO4^{2-}$)	< 70	No Limit	+	+	+	+
	70-300		+	+	0/-	+
	> 300		0	0	-	+
HCO_3^-/ $SO4^{2-}$	> 1.0	No Limit	+	+	+	+
	< 1.0		+	+	0/-	+
Electrical Conductivity	< 10µS/cm	No Limit	+	+	0	+
	10-500 µS/cm		+	+	+	+
	> 500 µS/cm		+	+	0	+
pH	< 6.0	Within 24 Hours	0	0	0	+
	6.0-7.5		0/+	+	0	+
	7.5-9.0		+	+	+	+
	> 9.0		+	+	0	+
Ammonium (NH_4^+)	< 2	Within 24 Hours	+	+	+	+
	2-20		+	+	0	+
	> 20		+	+	-	+
Chlorides (Cl^-)*	< 300	No Limit	+	+	+	+
	> 300		0	+	0/+	+
Free Chlorine (Cl_2)	< 1	Within 5 Hours	+	+	+	+
	1-5		+	+	0	+
	> 5		0/+	+	0/-	+

Note: See Chlorine Content Table

Table 47: Corrosion Resistance Continued

Water Containing	Concentration (mg/L or ppm)	Time Limits - Analyze Before	AISI 316	SMO 254	Copper Alloy	Nickel Alloy
Hydrogen Sulfide (H_2S)	< 0.05	No Limit	+	+	+	+
	> 0.05		+	+	0/-	+
Free (aggressive) Carbon Dioxide (CO_2)	< 5	No Limit	+	+	+	+
	5-20		+	+	0	+
	> 20		+	+	-	+
Total Hardness (°dH)	4.0-8.5	No Limit	+	+	+	+
Nitrate (NO_3)	< 100	No Limit	+	+	+	+
	> 100		+	+	0	+
Iron (Fe)	< 0.2	No Limit	+	+	+	+
	> 0.2		+	+	0	+
Aluminum (Al)	< 0.2	No Limit	+	+	+	+
	> 0.2		+	+	0	+
Manganese (Mn)	< 0.1	No Limit	+	+	+	+
	> 0.1		+	+	0	+

Table 48: Chloride Content

Water Containing	Concentration (mg/L or ppm)	Time Limits - Analyze Before	AISI 316	SMO 254	Copper Alloy	Nickel Alloy
Total Hardness (°dH)	4.0-8.5	No Limit	+	+	+	+
Nitrate (NO_3)	< 100	No Limit	+	+	+	+
	> 100		+	+	0	+
Iron (Fe)	< 0.2	No Limit	+	+	+	+
	> 0.2		+	+	0	+
Aluminum (Al)	< 0.2	No Limit	+	+	+	+
	> 0.2		+	+	0	+
Manganese (Mn)	< 0.1	No Limit	+	+	+	+
	> 0.1		+	+	0	+

Table 49: Thermistor Temperature vs Resistance Values

°C	°F	Resistance (kOhms)
-40	-40	2889.6
-35	-31	2087.22
-30	-22	1522.20
-25	-13	1121.44
-20	-4	834.72
-15	5	627.28
-10	14	475.74
-5	23	363.99
0	32	280.82
5	41	218.41
10	50	171.17
15	59	135.14
20	68	107.44
25	77	86.00
30	86	69.28
35	95	56.16
40	104	45.81
45	113	37.58
50	122	30.99
55	131	25.68
60	140	21.40
65	149	17.91
70	158	15.07
75	167	12.73
80	176	10.79
85	185	9.20
90	194	7.87
95	203	6.77
100	212	5.85
105	221	5.09
110	230	4.45
115	239	3.87
120	248	3.35
125	257	2.92
130	266	2.58
135	275	2.28
140	284	2.02
145	293	1.80
150	302	1.59
155	311	1.39
160	320	1.25
165	329	1.12

12. APPENDIX B - UNIT SAFETY HIERARCHY

Note: The information in Appendix B does not apply to Stratus. For Stratus specific configuration information, please refer to the Stratus Technical Guide.

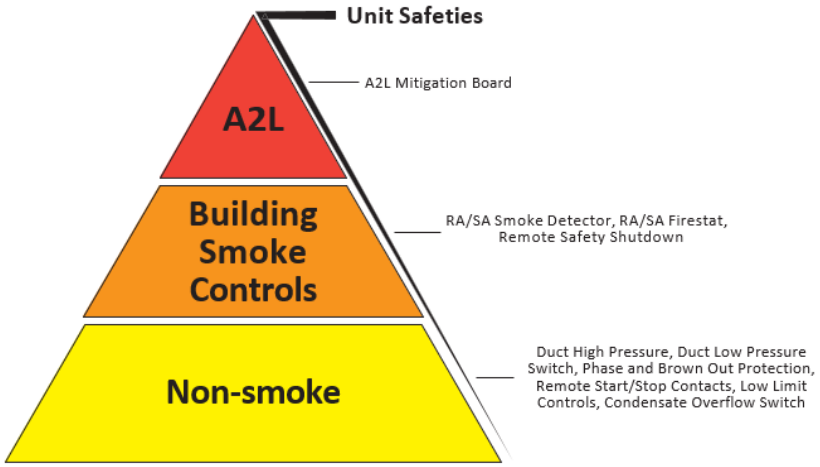

Figure 61: Unit Safety Hierarchy

Default (A2L Priority)

Units will ship with A2L sequences at the highest priority. This may activate the indoor blower in the event of an A2L leak, even if Building Smoke Controls or Non-smoke safeties interrupt the 24V/120V safety circuit. The terminal block labeled 'Hierarchy Control' will control the priority.

The jumper will connect 'Com' and 'A2L' for A2L priority.

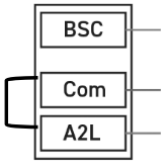

Figure 62: A2L Priority Jumper Phases

WARNING

This alternative wiring method will shift the unit's safety priority toward building smoke control and may override A2L once the jumper is moved. Only move this jumper if required by local codes.

Building Smoke Control Priority

Units will have the option to shift the Unit Safety Hierarchy in the field. To shift the priority, turn power off to the unit and move the jumper to 'Com' and 'BSC' on the 'Hierarchy Control' terminals.

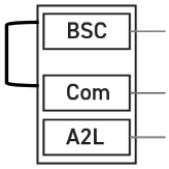

Figure 63: Building Smoke Control Priority Jumper

Example Scenario

If priority is given to Building Smoke Controls, and simultaneously both A2L and any of the Building Smoke Controls goes into alarm, the 24V/120V safety circuit will shut down the unit, and A2L mitigation will not take place.

Locating the "Hierarchy Control" LVTB

Locate the low voltage control section

Identify the 'Hierarchy Control' label by the (3) terminals labeled "BSC", "COM", and "A2L"

13. RQ SERIES START-UP FORMS

Job Name: _____ Date: _____

Installed Address:

_____

_____

Model Number: _____

Serial Number: _____ Tag: _____

Startup Contractor: _____

Address: _____

_____ Phone: _____

13.1. Pre-Startup Checklist

The installing contractor must verify the following items.

1. Is there any visible shipping damage?	☐ Yes
2. Is the unit level?	☐ Yes
3. Are the unit clearances adequate for service and operation?	☐ Yes
4. Do all access doors open freely, and are the handles operational?	☐ Yes
5. Have all of the shipping braces been removed?	☐ Yes
6. Have all of the electrical connections been tested for tightness?	☐ Yes
7. Has all gas heat piping been checked for leaks?	☐ Yes
8. Does the electrical service correspond to the unit nameplate?	☐ Yes
9. Has the transformer tap been checked for the 208/230V units?	☐ Yes
10. Has adequate overcurrent protection been installed to match the requirements listed on the unit nameplate?	☐ Yes
11. Have all set screws on the fans been tightened?	☐ Yes
12. Do all of the fans rotate freely?	☐ Yes
13. Does the field water piping to the unit appear to be correct per design parameters?	☐ Yes
14. Is all of the copper tubing isolated so it does not rub?	☐ Yes
15. Have the damper assemblies been inspected?	☐ Yes
16. Are the air filters installed with proper orientation?	☐ Yes
17. Have the condensate drain and p-trap been connected?	☐ Yes
18. Is the actual refrigerant charge of the largest circuit in accordance with the required conditioned floor area according to Table 16?	☐ Yes
19. Are the ventilation and exhaust openings unobstructed?	☐ Yes
20. Are the markings, decals, and warnings on the unit clearly visible?	☐ Yes
21. Have all of the damaged or illegible markings and warnings been replaced?	☐ Yes

13.2. A2l Refrigerant Detection System (RDS) Pre-Start Checklist

1. Does each port (sensors 1-3) have a male connector plugged into both the Cabinet and Airstream connections on the mitigation board?	☐ Yes
2. Do the compressor and gas heat operation shut off when the cabinet board sensor trips?	☐ Yes
3. Does normal unit operation commence, except for the compressor and gas heater, after the cabinet board sensor trips?	☐ Yes
4. Does the compressor shut off and the fan stay on when the Airstream board sensor trips?	☐ Yes
5. Does the non-compressor or gas heating/cooling stay on when both boards trip? (electric heater stays on)	☐ Yes
6. When the A2L airstream alarm is activated, do the supply fans start, VAV boxes open, and compressors stop?	☐ Yes

13.3. Ambient Temperature

Ambient Temperature	
Ambient Dry Bulb Temperature _____°C/°F	Ambient Wet Bulb Temperature _____°C/°F

13.4. Supply Fan Assembly

Alignment ☐		Check Rotation ☐		Nameplate Amps _____
Number	**Hp**	**L1 Volts/Amps**	**L2 Volts/Amps**	**L3 Volts/Amps**
1				
Band Size_____		VAV Controls _____		
VFD Frequency _____				

13.5. Energy Recovery Wheel Assembly

Wheel(s) Sprin Freely ☐		Check Rotation ☐		FLA _____
Number	**Hp**	**L1 Volts/Amps**	**L2 Volts/Amps**	**L3 Volts/Amps**
1				

13.6. Power Exhaust Fan Assembly

Alignment ☐		Check Rotation ☐		Nameplate Amps _____
Number	**Hp**	**L1 Volts/Amps**	**L2 Volts/Amps**	**L3 Volts/Amps**
1				
Band Size_____				
VFD Frequency _____				

13.7. Outside Air/Economizer Dampers

Operation Check ☐
Damper Actuator Type: _____
Economizer Changeover Type and Operations: _____
Damper Wiring Check ☐
Gears Check ☐

13.8. Unit Configuration

Water- Cooled Condenser ☐	Air Cooled Condenser ☐
No Water Leaks ☐	Evaporative Condenser ☐
Condenser Safety Check ☐	
Water Flow _____GPM	
Water Inlet Temperature _____°F	
Water Outlet Temperature _____°F	

13.9. Compressors/DX Cooling

Number	L1 Volts/Amps	L2 Volts/Amps	L3 Volts/Amps	Head Pressure PSIG	Suction Pressure PSIG
1 - Full Capacity					
2 - Reduced Capacity					

13.10. Refrigeration Systems

Refrigeration System 1 Full Capacity - Cooling Mode					
	Pressure	Saturated Temperature	Line Temperature	Sub-cooling	Superheat
Discharge				N/A	N/A
Suction				N/A	
Liquid					N/A

Refrigeration System 1 Reduced Capacity - Cooling Mode					
	Pressure	Saturated Temperature	Line Temperature	Sub-cooling	Superheat
Discharge				N/A	N/A
Suction				N/A	
Liquid					N/A

Refrigeration System 1 Full Capacity - Heating Mode (Heat Pump Only)					
	Pressure	Saturated Temperature	Line Temperature	Sub-cooling	Superheat
Discharge				N/A	N/A
Suction				N/A	
Liquid					N/A

Refrigeration System 1 Reduced Capacity - Heating Mode (Heat Pump Only)					
	Pressure	Saturated Temperature	Line Temperature	Sub-cooling	Superheat
Discharge				N/A	N/A
Suction				N/A	
Liquid					N/A

13.11. Air-Cooled Condenser Fans

Alignment ☐		Check Rotation ☐		Nameplate Amps _____
Number	**Hp**	**L1 Volts/Amps**	**L2 Volts/Amps**	**L3 Volts/Amps**
1				

13.12. Water/Glycol System

1. Has the entire system been flushed and pressure checked?	☐ Yes
2. Has the entire system been filled with fluid?	☐ Yes
3. Has air been bled from the heat exchangers and piping?	☐ Yes
4. If glycol is used, is it the proper type and concentration (N/A if water)?	☐ Yes
5. Is there a minimum load of 50% of the design load?	☐ Yes
6. Has the water piping been insulated?	☐ Yes
7. What is the freezing point of the glycol (N/A if water)? _____	☐ Yes

13.13. Gas Heating

Natural Gas ☐	Propane ☐	Purge Air from Lines ☐	Verify Pilot Spark ☐

Stage	Manifold Pressure (w.c.) inlet	Manifold Pressure (w.c.) outlet
1		
2		
3		
4		

13.14. Electric Heating

Stages _____	
Limit Lockout ☐	Aux. Limit Lockout ☐

Stage	Volts/Amps
1	
2	
3	
4	

13.15. Electric Preheating

Stages _____	
Limit Lockout ☐	Aux. Limit Lockout ☐
Stage	Volts/Amps
1	
2	
3	
4	

13.16. Additional Findings

13.17. Signature

By signing this form, you verify that all of the information contained is correct and filled out to the best of your ability.

Name:	
Title:	
Rep/Contractor:	
Signature:_____	**Date/Time**:_____

14. APPENDIX C - MAINTENANCE LOGS

This log must be kept with the unit. It is the responsibility of the owner and/or maintenance/service contractor to document any service, repair, or adjustments. AAON Service and Warranty Departments are available to advise and provide phone help for proper operation and replacement parts. The responsibility for proper start-up, maintenance, and servicing of the equipment falls to the owner and a qualified licensed technician.

Entry Date	Action Taken	Name/Tel.

15. APPENDIX D: MAINTENANCE LOG (E-COATED COIL)

Installation Site: _____ Installation Date: _____

Unit Model #: _____ Unit Location: _____

Unit Serial #: _____ Customer: _____

Year 20__	Ambient Temp (°F)	Surface Debris Removed	Coil Cleaned	Approved Cleaner Used	Potable Water Backwash Rinse	Potable Water Frontwash Rinse	Chlorides Removed	Comments
JAN		☐	☐	☐	☐	☐	☐	
FEB		☐	☐	☐	☐	☐	☐	
MAR		☐	☐	☐	☐	☐	☐	
APR		☐	☐	☐	☐	☐	☐	
MAY		☐	☐	☐	☐	☐	☐	
JUN		☐	☐	☐	☐	☐	☐	
JUL		☐	☐	☐	☐	☐	☐	
AUG		☐	☐	☐	☐	☐	☐	
SEP		☐	☐	☐	☐	☐	☐	
OCT		☐	☐	☐	☐	☐	☐	
NOV		☐	☐	☐	☐	☐	☐	
DEC		☐	☐	☐	☐	☐	☐	

The following cleaners have been approved for use on AAON E-Coated Coils to remove mold, mildew, dust, soot, greasy residue, lint, and similar particulates without harming the coated surfaces.

Cleaning Agent	Reseller	Part Number
GulfClean ™ Coil Cleaner Or Enviro-Coil Cleaner	RectorSeal 2601 Spenwick Drive, Houston, Texas 77055 (P): 713-263-8001	G074480 / 80406 Or V82540
GulfClean Salt Reducer ™	" "	G074480 / 80406

Recommended Chloride Remover
RectorSeal 2601 Spenwick Drive, Houston, Texas 77055 (P): 713-263-8001

16. LITERATURE CHANGE HISTORY

July 2022

Added the clarification that "ACR" rigid copper tubing must be used for connecting copper.

December 2022

Added obsolete options in the feature string nomenclature for historical reference. Added Two-Stage Refrigeration system options M and N to Model Option A5.

September 2023

Added all information pertaining to UL-60335 standard. Included metric units with all imperial units. Added R-454B P.T. tables.

July 2024

Added text for Refrigerant Detection System

August 2024

Added the process of decommissioning the unit. Added text to General Information stating the maximum installation elevation is 11,500 ft.

September 2024

Added detailed text to the RDS mitigation board section for A2L sensors.

October 2024

Updated part number.

January 2025

Second Edition

May 2025

Added a warning for overtorquing the Seimens actuator. Added note regarding exclusive use of R454-B refrigerant.

August 2025

Minor template update

October 2025

Updated and edited document formatting. Removed all "Next Gen" references. Added Table 12. Added Stratus note to Appendix B

March 2026

Updated to include Vapor Injection

September 2026

Updated Revision to “D”. Added “Install this appliance in accordance with local codes...” paragraph to Safety Section. Corrected Warning Box outline. Updated “Address” in *Start-Up Forms* to “Installed Address”.

AAON

2425 South Yukon Ave.

Tulsa, OK 74107-2728

Phone: 918-583-2266

Fax: 918-583-6094

www.AAON.com

RQ Series

Installation, Operation, & Maintenance

G164820 · Rev. D · 20260922

AAON® is a subsidiary of The Aaon Group. It is the intent of The Aaon Group to provide accurate and current product information. However, in the interest of product improvement, The Aaon Group reserves the right to change pricing, specifications, and/or design of its product without notice, obligation, or liability.

Copyright © AAON®, all rights reserved throughout the world.

AAON® and AAONAIRE® are registered trademarks of The Aaon Group, Tulsa, OK.