# Installation, Operation, and Maintenance Manual

## 2026

# H3 and V3 Series

### Horizontal & Vertical Indoor Air Handling Units

The information in this document is subject to change. Printed versions may not reflect the most current updates. Please ensure that you have the most recent version prior to referencing any information within the document. Visit www.aaon.com to confirm your version is up to date, or to download the most recent version.

R-454B

Conforms to UL STDs 60335-1 and 60335-2-40

Rev D Version 20260918

# This Page Intentionally Left Blank

# TABLE OF CONTENTS

1. SAFETY ..... 2
2. NOTES, CAUTIONS, AND WARNINGS ..... 3
3. H3/V3 SERIES FEATURE STRING NOMENCLATURE ..... 10
3.1. H3/V3 Series Feature String Description ..... 10
4. GENERAL INFORMATION ..... 19
4.1. Codes and Ordinances ..... 20
4.2. Receiving Unit ..... 20
4.3. Storage ..... 21
4.4. Wiring Diagrams ..... 21
5. INSTALLATION ..... 22
5.1. Locating the Unit ..... 22
5.2. Lifting and Handling the Unit ..... 29
5.3. Unit Assembly ..... 29
5.4. Control Box ..... 32
5.5. Electrical ..... 33
5.6. Duct Connection ..... 36
5.7. Condensate Drain Pans ..... 36
5.8. Condensate Drain Piping ..... 37
6. STARTUP ..... 39
6.1. Filters ..... 39
6.2. Supply Fans ..... 39
6.3. Fan Air Flow Adjustment ..... 40
7. OPERATION ..... 41
7.1. Refrigerant Detection System ..... 41
7.2. Thermostat Operation ..... 42
7.3. Split System DX Cooling Operation and Control ..... 43
7.4. Chilled Water or Non-Compressorized DX Cooling Operation ..... 43
7.5. Steam or Hot Water Preheating Operation ..... 43
7.6. Electric Heating Operation ..... 43
7.7. Gas Heater Operation ..... 43
8. MAINTENANCE ..... 44
8.1. DX Cooling ..... 44
8.2. Condensate Drain Pans ..... 44
8.3. Winterizing Coils ..... 44
8.4. Supply Fans ..... 44

8.5. E-Coated Coil Cleaning ... 45
8.6. Refrigerant Removal and Evacuation ... 46
9. OPTIONS ... 48
9.1. Heating Coils ... 48
9.2. Chilled Water Coil ... 48
9.3. Direct Expansion (DX) Systems ... 49
9.4. Evaporator Coil ... 50
9.5. Thermal Expansion Valve ... 50
9.6. Hot Gas Reheat ... 50
9.7. Hot Gas Bypass ... 51
10. ENERGY RECOVERY UNITS ... 57
10.1. Initial Mechanical Check and Setup ... 57
10.2. Polymer Energy Recovery Wheel ... 58
10.3. Energy Recovery Wheel General Cleaning ... 64
11. GAS AND ELECTRIC HEATING ... 68
12. GAS HEATING ... 69
12.1. Unit Location and Clearances ... 69
12.2. Leak Testing ... 71
12.3. Phase and Brownout Protection Module ... 72
13. FILTER REPLACEMENT ... 73
14. REPLACEMENT PARTS ... 74
15. DECOMMISSIONING ... 75
16. WARRANTY ... 76
17. H3 SERIES STARTUP FORM ... 88
17.1. Pre Startup Checklist ... 88
17.2. Ambient Temperature ... 89
17.3. Voltage ... 89
17.4. Supply Fan Assembly ... 89
17.5. Energy Recovery Wheel Assembly ... 89
17.6. Dampers ... 89
17.7. Refrigeration System 1 - Cooling Mode ... 89
17.8. Refrigeration System 2 - Cooling Mode ... 89
17.9. Refrigeration System 3 - Cooling Mode ... 90
17.10. Refrigeration System 4 - Cooling Mode ... 90
17.11. Compressors/DX Cooling ... 90
17.12. Air-Cooled Condenser Fans ... 90
17.13. Refrigeration System 1 - Heating Mode (Heat Pump Only) ... 90

17.14. Refrigeration System 2 - Heating Mode (Heat Pump Only) ..... 91
17.15. Refrigeration System 3 - Heating Mode (Heat Pump Only) ..... 91
17.16. Refrigeration System 4 - Heating Mode (Heat Pump Only) ..... 91
17.17. Water/Glycol System ..... 91
17.18. Electric Heating ..... 91
17.19. Gas Heating ..... 92
17.20. A2L Mitigation Board ..... 92
18. APPENDIX A: UNIT SAFETY HIERARCHY ..... 93
19. APPENDIX B: MAINTENANCE LOG ..... 94
20. AAON E-COATED COIL MAINTENANCE RECORD ..... 95
21. LITERATURE CHANGE HISTORY ..... 96

# TABLE OF FIGURES

Figure 1: Gas Heater (81% Separated Combustion shown) ... 22
Figure 2: Minimum Clearance Required for Access to Unit (H3 Series plan view) ... 24
Figure 3: Minimum Clearance Required for Access to Unit (V3 Series plan view) ... 24
Figure 4: Removeable Internal Control Panel ... 25
Figure 5: H3 Internal Control Panel With Top Access Panel Removed ... 25
Figure 6: V3 Internal Control Panel ... 25
Figure 7: Supply Fan Access after ... 25
Figure 8: H3 Series Platform Suspension Installation ... 27
Figure 9: H3 Series Parallel Beam Suspension Installation ... 27
Figure 10: H3 Series Unit Orientation ... 28
Figure 11: V3 Series Unit Orientation ... 28
Figure 12: H3 Schematic with (1) Mixing Box, (2) Air Handler, and (3) Final Filter ... 29
Figure 13: V3 Schematic with (1) Exhaust Fan, (2) Energy Recovery, (3) Air Handler ... 29
Figure 14: Low & High Voltage Quick Connect ... 30
Figure 15: Remove Access Panel ... 30
Figure 16: Apply Gasket ... 30
Figure 17: Connect Sections ... 31
Figure 18: Clamp Sections ... 31
Figure 19: Bar Clamp ... 31
Figure 20: Flange Overlap ... 31
Figure 21: Self-Tapping Screw ... 31
Figure 22: Forklift Base Assembly ... 31
Figure 23: Back View External Control Box ... 32
Figure 24: External Control Box Electrical Connections ... 33
Figure 25: H3 Internal Control Panel Electrical Connections ... 34
Figure 26: Drain Trap ... 37
Figure 27: Plenum Fan Gap Tolerances ... 40
Figure 28: A2L Sensor Location ... 42
Figure 29: Steam Distributing Piping ... 48
Figure 30: Hot & Chilled Water Piping ... 48
Figure 31: TXV Bulb Position ... 50
Figure 33: Energy Recovery Wheel ... 57
Figure 34: Lifting Hole Locations ... 57
Figure 35: Polymer Energy Recovery Wheel ... 58
Figure 36: Purge Screws ... 58

Figure 37: Purge Adjust ..... 58
Figure 38: Determine Fit ..... 59
Figure 39: Cross Section of Air Seal Structure ..... 59
Figure 40: Avoid Racking of Cassette Frame ..... 60
Figure 41: Diameter Seal Adjustment ..... 60
Figure 42: Hub Seal Adjustment ..... 60
Figure 43: Wheel Segment Removal Pattern ..... 61
Figure 44: Segment Retainer ..... 62
Figure 45: Segment Installation ..... 62
Figure 46: Belt Replacement ..... 64
Figure 47: H3 A Or B Cabinet Energy Recovery Wheel ..... 66
Figure 48: H3 A Or B Cabinet Outside Air Filter Access ..... 66
Figure 49: H3 C Cabinet Energy Recovery Wheel ..... 66
Figure 50: H3 size C return air filters - access through top and left side of the filter box ..... 67
Figure 51: H3 C Cabinet Outside Air Filter Access ..... 67
Figure 52: H3 D or E Cabinet Energy Recovery Wheel ..... 67
Figure 53 Joint Straps Installation H3-A,B,C ..... 70
Figure 54 Joint Straps Installation H3-D ..... 70
Figure 55 Joint Straps Installation H3-E ..... 70
Figure 56 Joint Strap Installation V3 ..... 70
Figure 57: PBO ..... 72
Figure 58: Unit Safety Hierarchy ..... 93
Figure 59: A2L Priority Jumper ..... 93
Figure 60: Building Smoke Control Priority Jumper ..... 93

# TABLE OF TABLES

Table 1: H3 & V3 Series Clearances (Metric) ..... 23
Table 2: H3 & V3 Series Clearances (Imperial) ..... 23
Table 3: Coil Removal Clearances ..... 24
Table 4: Nameplate Voltage Markings & Tolerances ..... 33
Table 5: Control Wiring ..... 35
Table 6: 35 KAIC Fuse Sizing ..... 36
Table 7: 65 KAIC Fuse Sizing ..... 36
Table 8: Drain Trap Dimensions (Imperial) ..... 37
Table 9: Drain Trap Dimensions (Metric) ..... 37
Table 10: Plenum Fan Set Screw Specifications ..... 40
Table 11: Steam Distributing Coil Sweat Connection Sizes ..... 48
Table 12: Hot Water Coil Sweat Connection Sizes ..... 48
Table 13: Chilled Water Coil Sweat Connection Sizes ..... 48
Table 14: Minimum and Maximum Coil Pressures and Temperatures ..... 49
Table 18: Minimum Circulation Airflow and Room Area for a Given Charge ..... 52
Table 19: Minimum Circulation Airflow and Room Area for a Given Charge (continued) ..... 53
Table 21: Minimum Airflow for Non-Ducted Applications by Box Size ..... 54
Table 22: R-454B Refrigerant Temperature-Pressure Chart (Metric) ..... 55
Table 23: R-454B Refrigerant Temperature-Pressure Chart (Imperial) ..... 56
Table 24: Energy Recovery Wheel Cleaning Information ..... 65
Table 25: Heat Capacity Chart ..... 68
Table 26: Unit Clearance Requirements ..... 69
Table 27: Gas Piping Supports (Metric) ..... 71
Table 28: Gas Piping Supports (Imperial) ..... 71
Table 29: H3 Series A Cabinet Unit Filters ..... 77
Table 30: H3 Series B Cabinet Unit Filters ..... 77
Table 31: H3 Series C Cabinet Unit Filters ..... 78
Table 32: H3 Series D Cabinet Unit Filters ..... 78
Table 33: H3 Series E Cabinet Unit Filters ..... 79
Table 34: H3 Series A Cabinet Final Filters ..... 79
Table 35: H3 Series B Cabinet Final Filters ..... 80
Table 36: H3 Series C Cabinet Final Filters ..... 80
Table 37: H3 Series D Cabinet Final Filters ..... 81
Table 38: H3 Series E Cabinet Final Filters ..... 81
Table 39: H3 Series Energy Recovery OA Filters (Feature 13 ≠ 0) ..... 82

Table 40: H3 Series Energy Recovery RA Filters (Feature 13 ≠ 0) ..... 82
Table 41: V3 Series A Cabinet Unit Filters ..... 83
Table 42: V3 Series B Cabinet Unit Filters ..... 83
Table 43: V3 Series C Cabinet Unit Filters ..... 84
Table 44: V3 Series D Cabinet Unit Filters ..... 84
Table 45: V3 Series E Cabinet Unit Filters ..... 85
Table 46: V3 Series A Cabinet Final Filters ..... 85
Table 47: V3 Series B Cabinet Final Filters ..... 85
Table 48: V3 Series C Cabinet Final Filters ..... 86
Table 49: V3 Series Energy Recovery OA Filters (Feature 13 = A–V) ..... 86

# This Page Intentionally Left Blank

# 1. SAFETY

Startup and service must be performed by a Factory Trained Service Technician competent in working with flammable refrigerants.

The unit is for indoor use only. See General Information section for more unit information.

The supply and return air ducts must be derived from the same space. It is recommended that ducts be provided with access panels to allow inspection for duct tightness. When a down flow duct is used with electric heat, the exhaust duct must be an L shaped duct.

For ducted applications, supply and return must be ducted directly to the space served by the unit. If plenum return is to be utilized, the return plenum must be provided with a refrigerant detection system or ventilation in accordance with ASHRAE 15 requirements.

These units must not be used for heating or cooling at any time during any phase of construction. Very low return air temperatures, harmful vapors, and misplacement of the filters will damage the unit and its efficiency

Every unit has a unique equipment nameplate with electrical, operational, and unit clearance specifications. Always refer to the unit nameplate for specific ratings unique to the model you have purchased.

Clean duct and components upon completion of the construction setup.

When pairing with a condensing unit, ensure the refrigerant pressures for the paired system do not exceed the maximum allowable pressures listed on the unit nameplate.

Ensure that the unit is paired only with a condensing unit compatible with refrigerant marked on the nameplate.

Heatco gas-fired duct furnace cabinets are paired with AAON air handling units. The use of these cabinets must comply with all installation, operating, and maintenance requirements as detailed in the Heatco duct furnace's IOM. Refer to cabinet literature as additional considerations may need to be made. This literature is provided in the Heatco cabinet.

"The H3 & V3 is a PARTIAL UNIT AIR CONDITIONER, complying with PARTIAL UNIT requirements of UL 60335-2-40, and must only be connected to other units that have been confirmed as complying to corresponding PARTIAL UNIT requirements of UL 60335-2-40/ CSA C22.2 No. 60335-2-40, or UL 1995/ CSA C22.2 No 236.

Install this appliance in accordance with local codes. In the absence of local codes, install in accordance with ASHREA 15, ASHRAE 15.2, IAPMO Uniform Mechanical Code, ICC International Mechanical Code, or CSA B52.

READ THE ENTIRE INSTALLATION, OPERATION AND MAINTENANCE MANUAL. OTHER IMPORTANT SAFETY PRECAUTIONS ARE PROVIDED THROUGHOUT THIS MANUAL.

Keep this manual and all literature safeguarded near or on the unit.

# 2. NOTES, CAUTIONS, AND WARNINGS

Attention Must be paid to the following statements

**Note:** Notes are intended to clarify the unit installation, operation, and maintenance.

**CAUTION**

Caution statements are given to prevent actions that may result in equipment damage, property damage, or personal injury.

**WARNING**

Warning statements are given to prevent actions that could result in equipment damage, property damage, or serious personal injury.

**DANGER**

Danger statements are given to prevent actions that will result in equipment destruction, property damage, and severe personal injury or death.

**WARNING**

*Qualified Installer*

Improper installation, adjustment, alteration, service or maintenance can cause property damage, personal injury or loss of life. Startup and service must be performed by a Factory Trained Service Technician competent in working with flammable refrigerants. A copy of this IOM must be kept with the unit.

**WARNING**

*For Your Safety*

Do not store or use gasoline or other flammable vapors and liquids in the vicinity of this or any other appliance.

**WARNING**

If the information in this manual is not followed exactly, a fire or explosion may result causing property damage, personal injury or loss of life.

**WARNING**

Electric shock hazard. Before servicing, disconnect all electrical power to the unit, including remote disconnects, to avoid shock hazard or injury from rotating parts. Follow proper Lockout-Tagout procedures.

**WARNING**

*Electric Shock, Fire Or Explosion Hazard*

Failure to follow safety warnings exactly could result in dangerous operation, serious injury, death or property damage.

Improper servicing could result in dangerous operation, serious injury, death or property damage.

Installation and service must be performed by a qualified technician, service agency or the gas supplier.

- Before servicing, disconnect all electrical power to the unit. More than one disconnect may be provided.
- When servicing controls, label all wires prior to disconnecting. Reconnect wires correctly.
- Verify proper operation after servicing. Secure all doors with key-lock or nut and bolt.

**WARNING**

*Fire, Explosion Or Carbon Monoxide Poisoning Hazard*

Failure to replace proper controls could result in fire, explosion or carbon monoxide poisoning. Failure to follow safety warnings exactly could result in serious injury, death or property damage. Do not store or use gasoline or other flammable vapors and liquids in the vicinity of this appliance.

**CAUTION**

Unit power supply wire must be only copper or aluminum.

**WARNING**

*Grounding Required*

All field-installed wiring must be completed by qualified personnel. Field-installed wiring must comply with NEC/CEC, local and state electrical code requirements. Failure to follow code requirements could result in serious injury or death. Provide proper unit ground in accordance with these code requirements.

**WARNING**

During installation, testing, servicing and troubleshooting of the equipment it may be necessary to work with live electrical components. Only a qualified licensed electrician or individual properly trained in handling live electrical components shall perform these tasks.

Standard NFPA-70E, an OSHA regulation requiring an Arc Flash Boundary to be field established and marked for identification of where appropriate Personal Protective Equipment (PPE) be worn, must be followed.

**WARNING**

*Unit Handling*

To prevent injury or death lifting equipment capacity shall exceed unit weight by an adequate safety factor. Always test-lift unit not more than 61 centimeters (24 inches) high to verify proper center of gravity lift point to avoid unit damage, injury or death.

**WARNING**

*Rotating Components*

Unit contains fans with moving parts that can cause serious injury. Do not open door containing fans until the power to the unit has been disconnected and fan wheel has

**CAUTION**

Failure to properly drain and vent coils when not in use during freezing temperature may result in coil and equipment damage.

**CAUTION**

Rotation must be checked on all MOTORS of 3 phase units at startup by a qualified service technician. Fan motor rotation must be checked for proper operation. Alterations must only be made at the unit power connection.

**WARNING**

Do not use oxygen, acetylene or air in place of refrigerant and dry nitrogen for leak testing. A violent explosion may result causing injury or death.

**WARNING**

Some chemical coil cleaning compounds are caustic or toxic. Use these substances only in accordance with the manufacturer's usage instructions. Failure to follow instructions may result in equipment damage, injury or death.

**WARNING**

*Water Pressure*

Prior to connection of condensing water supply, verify water pressure is less than maximum pressure shown on unit nameplate. To prevent injury or death due to instantaneous release of high pressure water, relief valves must be field supplied on system water piping.

**CAUTION**

Do not clean DX refrigerant coils with hot water or steam. The use of hot water or steam on refrigerant coils will cause high pressure inside the coil tubing and damage to the coil.

**WARNING**

Always use a pressure regulator, valves and gauges to control incoming pressures when pressure testing a system. Excessive pressure may cause line ruptures, equipment damage or an explosion which may result in injury or death.

**CAUTION**

Door compartments containing hazardous voltage or rotating parts are equipped with door latches to allow locks. Door latch are shipped with nut and bolts requiring tooled access. If you do not replace the shipping hardware with a pad lock always re-install the nut & bolt after closing the door.

**CAUTION**

To prevent damage to the unit, do not use acidic chemical coil cleaners. Do not use alkaline chemical coil cleaners with a pH value greater than 8.5, after mixing, without first using an aluminum corrosion inhibitor in the cleaning solution.

**WARNING**

Do not work in a closed area where refrigerant or nitrogen gases may be leaking. A sufficient quantity of vapors may be present and cause injury or death.

**WARNING**

Connected ductwork must be free of potential ignition sources, such as hot surfaces above 700 °C (1292 °F) or electrical devices prone to arcing or sparking. Potential ignition sources within the ductwork may only be allowed if the minimum air velocity across these components is above 1 m/s (200 ft/min) during any point which the component can function.

**WARNING**

Minimum circulation airflow is required to prevent stagnation of refrigerant in the event of a refrigerant leak. Zone dampers and VAV boxes must be operated to allow for minimum circulation airflow in the event of a refrigerant leak.

**WARNING**

This appliance contains a flammable refrigerant. Minimum floor area on nameplate is based on factory charge at a ceiling/release height of 2.2 m (7.2 ft) in accordance with UL 60335-2-40. Refer to

Table 18, Table 19, and Table 20 for different allowable room areas based on other charges and ceiling/release heights. Apply altitude adjustment factor to table values as required by local codes.

**WARNING**

Do not use torch or other potential ignition source to detect refrigerant leaks. Use only electronic detector suitable for the refrigerant, or bubble method with chlorine free detergent.

**WARNING**

If refrigerant leak is detected, remove/extinguish all sources of open flame. If repairing refrigerant leak requires brazing, remove all refrigerant before beginning brazing.

**WARNING**

If this appliance is installed to serve a conditioned area less than the minimum area as indicated in

Table 18, Table 19 and Table 20, the served space must be free of continuously operating open flames or other sources of ignition. Additional ventilation is required in accordance with ASHRAE 15.

**WARNING**

Refrigerant Detection System activated circulation airflow. In the event of refrigerant leak within airstream, indoor blower is activated to provide circulation airflow. Mitigation board provided with alarm output. Wire all zone dampers and VAV boxes to alarm output to open in the event of a refrigerant leak alarm.

**WARNING**

Only auxiliary devices approved by manufacturer or declared suitable with the refrigerant may be installed in ductwork.

**WARNING**

Flammable refrigerant. Be aware that refrigerant does not contain an odor.

**WARNING**

Never attempt to open an access door or remove a panel while the unit is running. Pressure in the unit can cause excessive force against the panel.

**WARNING**

This appliance is not intended for use by persons with reduced physical, sensory or mental capabilities, or lack of experience and knowledge, unless they have been given supervision or instruction concerning use of the appliance by a person responsible for their safety. Children must be supervised to ensure they do not play with this appliance.

**WARNING**

Do not weld or cut foam panel with plasma cutters or a cutting torch - When burnt the foam produces dangerous fumes.

**WARNING**

Ensure that sufficient dampers will be open to provide air path before fan is allowed to run.

**CAUTION**

In order to avoid a hazard due to inadvertent resetting of the THERMAL CUT-OUT, this appliance must not be supplied through an external switching device, such as a timer, or connected to a circuit that is regularly switched on and off by the utility.

**CAUTION**

PVC (Polyvinyl Chloride) and CPVC (Chlorinated Polyvinyl Chloride) are vulnerable to attack by certain chemicals. Polyolester (POE) oils used with R-454B and other refrigerants, even in trace amounts, in a PVC or CPVC piping system will result in stress cracking of the piping and fittings and complete piping system failure.

**WARNING**

Ensure that there are no live electrical components or wiring exposed when adjusting charge, recovering charge, or purging the system. Ensure that earthing continuity is unbroken.

**WARNING**

Flammable refrigerant. Do not pierce or burn tubing or refrigerant containing components.

**WARNING**

Do not use means to accelerate the defrosting process or to clean, other than those recommended in this manual.

**WARNING**

Units with VFD driven motors/compressors have adjustable overload settings. These are set by the AAON factory for the protection of these motors/compressors and must not be adjusted over this factory setpoint or bypassed.

**CAUTION**

Field-installed pipework must be protected from physical damage in operation and service. All joints must be accessibly for inspection in accordance with applicable local codes. In the absence of local codes, install in accordance with ASHRAE 15, ASHRAE 15.2, IAPMO Uniform Mechanical Code, ICC International Mechanical Code, or CSA B52. Do not install any field made joints within conditioned airstream.

**WARNING**

The appliance shall be stored in a room without continuously operating ignition sources (i.e. open flames, an operating gas appliances or operating electric heater).

**WARNING**

If any damage or fault to electrical equipment exists, do not provide power to unit. If the issue can not be resolved immediately, report issue to equipment owner to ensure power is not supplied before issue is resolved.

**CAUTION**

If an electrical component requires changing, verify specifications and intended application match the component to be replaced, including sealed or intrinsically safe specifications. Damaged sealed or intrinsically safe components must be replaced. Electrical components must be free from producing arcs or sparks. The maintenance guidelines in this manual must always be followed. If in doubt, contact Factory Technical Support.

# This Page Intentionally Left Blank

# 3. H3/V3 SERIES FEATURE STRING NOMENCLATURE

The following is an example of the H3/V3 Series Feature String

H3-ARB-3-0-461D-41F:EE1C-HAA-000-0A0-D0A00CA00BAP0B0000

## 3.1. H3/V3 Series Feature String Description

### 3.1.1. H3/V3 Model Options Breakdown

| GEN | | SIZE | ORENT | MJREV | | VLT | | CORR | | |
|---|---|---|---|---|---|---|---|---|---|---|
| **H3** | - | **A** | **R** | **B** | - | **3** | - | **0** | - | 461D-41F:EE1C-HAA-000-0A0-D0A00CA00BAP0B0000 |

**Series and Generation**

**H3** = Horizontal - Back Intake, Front Discharge
**V3** = Vertical - Back Intake, Top Discharge

**Unit Size**

**A** = Up to 1,200 cfm
**B** = Up to 2,000 cfm
**C** = Up to 4,000 cfm
**D** = Up to 6,000 cfm
**E** = Up to 10,000 cfm

**Unit Orientation**

**R** = Right-Hand Connections
**L** = Left-Hand Connections

**Revision**

**B** = Second Revision

**Voltage**

**1** = 230V/1Φ/60Hz
**2** = 230V/3Φ/60Hz
**3** = 460V/3Φ/60Hz
**4** = 575V/3Φ/60Hz
**8** = 208V/3Φ/60Hz
**9** = 208V/1Φ/60Hz

**Corrosion Protection**

**0** = None
**A** = Interior Corrosion Protection

## 3.1.2. H3/V3 Model Options Breakdown

| | | A1 | A2 | A3 | A4 | | |
|---|---|---|---|---|---|---|---|
| H3-ARB-3-0 | - | **4** | **6** | **1** | **D** | - | 41F:EE1C-HAA-000-0A0-D0A00CA00BAP0B0000 |

**A1: Cooling Type**

**0** = No Cooling
**2** = Chilled Water Cooling
**4** = R-454B DX Cooling

**A2: Cooling Rows**

**0** = No Cooling
**4** = 4 Row Coil
**6** = 6 Row Coil
**8** = 8 Row Coil

**A3: Cooling Stages**

**0** = No Cooling
**1** = Single Circuit
**2** = Two Circuits - Interlaced Coil
**D** = Double Serpentine
**F** = Single Serpentine
**H** = Half Serpentine
**Q** = Quarter Serpentine

**A4: Cooling FPI**

**0** = No Cooling
**A** = 10 fpi
**B** = 8 fpi
**C** = 12 fpi
**D** = 14 fpi

## 3.1.3. H3/V3 Model Options Breakdown

| | | B1 | B2 | B3 | | |
|---|---|---|---|---|---|---|
| H3-ARB-3-0-461D | - | **4** | **1** | **F** | : | EE1C-HAA-000-0A0-D0A00CA00BAP0B0000 |

**B1: Heating Type**

**0** = No Heating
**1** = Hot Water
**4** = Steam Distributing
**6** = Hot Water (Reheat position)
**7** = Electric Heat (UL 60335-2-40 Compliant)
**J** = HeatBoost Open Combustion Natural Gas Heat
**K** = HeatBoost Separated Combustion Natural Gas Heat
**L** = HeatBoost Open Combustion LP Gas Heat
**M** = HeatBoost Separated Combustion LP Gas Heat
**N** = HeatBoost Open Combustion Natural Gas Heat - High Altitude
**P** = HeatBoost Separated Combustion Natural Gas Heat - High Altitude
**Q** = HeatBoost Open Combustion LP Gas Heat - High Altitude
**R** = HeatBoost Separated Combustion LP Gas Heat - High Altitude

**B2: Heating Designation**

**0** = No Heating
**1** = 1 Row Coil
**2** = 2 Row Coil
**4** = 4 Row Coil
**A** = 7 kW (5.3 kW @ 208V)
**B** = 14 kW (10.5 kW @ 208V)
**C** = 21 kW (15.8 kW @ 208V) Or 50 MBH input
**D** = 28 kW (21.0 kW @ 208V)
**E** = 35 kW (26.3 kW @ 208V)
**F** = 42 kW (31.5 kW @ 208V)
**G** = 49 kW (37.0 kW @ 208V) Or 90 MBH input
**H** = 56 kW (42.0 kW @ 208V) Or 100 MBH input

**B2: Heating Designation (Continued)**

**J** = 63 kW (47.3 kW @ 208V) Or 125 MBH input
**K** = 70 kW (52.5 kW @ 208V) Or 135 MBH input
**L** = 150 MBH input
**M** = 84 kW (63.0 kW @ 208V) Or 180MBH input
**N** = 225MBH input
**P** = 200 MBH input
**Q** = 250 MBH input

**B3: Heating Stages**

**0** = No Heating
**1** = 1 Stage
**2** = 2 Stage
**3** = 3 Stage
**4** = 4 Stage
**5** = 5 Stage
**6** = 6 Stage
**A** = Modulating 3:1 93% Efficient
**B** = Modulating 5:1 93% Efficient
**C** = Modulating 3:1 81% Efficient
**D** = Modulating 5:1 81% Efficient
**F** = Single Serpentine 12 fpi
**H** = Half Serpentine 12 fpi
**K** = Single Serpentine 8 fpi
**L** = Half Serpentine 8 fpi
**M** = Quarter Serpentine 8 fpi
**N** = Single Serpentine 10 fpi
**P** = Half Serpentine 10 fpi
**Q** = Quarter Serpentine 12 fpi
**R** = Quarter Serpentine 10 fpiH3/V3 Unit
**S** = Modulating/SCR Electric

### 3.1.4. H3/V3 Model Options Breakdown

| | | 1A | 1B | 1C | 1D | | |
|---|---|---|---|---|---|---|---|
| H3-ARB-3-0-461D-41F | : | **E** | **E** | **1** | **C** | - | HAA-000-0A0-D0A00CA00BAP0B0000 |

**1A: Supply Air Blower Configuration**

**E** = 1 Blower + 1 Perm Magnet AC Totally Enclosed Motor+ 1 VFD
**F** = 2 Blowers + 2 Perm Magnet AC Totally Enclosed Motors + 2 VFDs

**1B: Supply Air Blower Model**

**E** = 13.5" Backward Curved Plenum, 50% Width
**F** = 13.5" Backward Curved Plenum, 70% Width
**G** = 15" Backward Curved Plenum, 70% Width
**H** = 22" Backward Curved Plenum, 70% Width
**1** = 15" Backward Curved Plenum
**2** = 15" Backward Curved Plenum, 50% Width
**3** = 18.5" Backward Curved Plenum
**4** = 18.5" Backward Curved Plenum, 70% Width

**1C: Supply Air Blower Motor**

**1** = 1 hp
**2** = 2 hp
**3** = 3 hp
**4** = 5 hp

**1D: Supply Air Blower Control / Control Vendor**

**C** = Field-Installed Controls by Others
**D**= Field-Installed Controls by Others + Isolation Relays
**E** = VCCX2 Orion Controls System

## 3.1.5. H3/V3 Model Options Breakdown

| | | 2 | 3 | 4 | | |
|---|---|---|---|---|---|---|
| H3-ARB-3-0-461D-41F:EE1C | - | **H** | **A** | **A** | - | 000-0A0-D0A00CA00BAP0B0000 |

**2: Refrigeration Options**

**0** = Standard - None
**A** = Single Circuit External Hot Gas Bypass
**B** = Dual Circuit External Hot Gas Bypass
**C** = Heat Pump
**D** = Option B + H
**F** = Options C + H
**H** = Modulating Hot Gas Reheat
**P** = Option H (Circuit 1) + Option A (Circuit 2)
**R** = Option C + A
**S** = Option C + B
**T** = Option C + H + A
**U** = Option C + H + B

**3: Special Controls**

**0** = Standard - None
**A** = Constant Volume Controller - CV Cool + CV Heat
**C** = VAV Controller - VAV Cool + CV Heat
**E** = Make Up Air Controller - CV Cool + CV Heat
**H** = DX-DOAS Controls
**J** = DX-DOAS Controls Heat Pump

**4: Additional Controls**

**0** = Standard - None
**A** = Phase and Brownout Protection
**B** = Return and Supply Air Firestat
**C** = Return Air Smoke Detector
**D** = Options A + B
**E** = Options A + C
**F** = Options B + C
**G** = Options A + B + C
**H** = Remote Safety Shutdown Terminals
**J** = Energy Recovery Wheel Rotation Detection
**K** = Options A + H
**L** = Options A + J
**M** = Options B + H
**N** = Options B + J
**P** = Options C + H
**Q** = Options C + J
**R** = Options H + J
**S** = Options A + B + H
**T** = Options A + B + J
**U** = Options A + C + H
**V** = Options A + C + J
**W** = Options A + H + J
**Y** = Options B + C + H
**Z** = Options B + C + J
**1** = Options B + H + J
**2** = Options C + H + J
**3** = Options A + B + C + H
**4** = Options A + B + C + J
**5** = Options A + B + H + J
**6** = Options A + C + H + J
**7** = Options B + C + H + J
**8** = Options A + B + C + H + J

## 3.1.6. H3/V3 Model Options Breakdown

| | | 5A | 5B | 5C | | 6A | 6B | 6C | | |
|---|---|---|---|---|---|---|---|---|---|---|
| H3-ARB-3-0-461D-41F:EE1C-HAA | - | **0** | **0** | **0** | - | **0** | **A** | **0** | - | D0A00CA00BAP0B0000 |

**5A: Return Air Damper Position**

**0** = Standard - None
**F** = Front
**L** = Left Hand (Front OA Damper Required)
**R** = Right Hand (Front OA Damper Required)
**T** = Top (Front OA Damper Required)

**5B: Outside Air Damper Position**

**0** = Standard - None
**F** = Front
**L** = Left Hand (Front RA Damper Required)
**R** = Right Hand (Front RA Damper Required)
**T** = Top (Front RA Damper Required)

**5C: Mixing Box Damper Control**

**0** = Standard - None
**A** = 2 Position Actuators (24V)
**B** = Fully Modulating Actuators (DDC)
**C** = Fixed Position Dampers
**D** = Fully Modulating Actuator - Enthalpy Limit
**E** = Fully Modulating Actuator - Sensible Limit

**6A: Pre Filter Box**

**0** = Standard - None
**0** = No Unit Filters
**A** = 2" Pleated - MERV 8
**B** = 4" Pleated - MERV 8
**C** = 4" Pleated - MERV 11
**D** = 4" Pleated - MERV 13
**E** = 4" Pleated - MERV 14
**F** = 2" Pleated - MERV 8 + 4" Pleated - MERV 8
**G** = 2" Pleated - MERV 8 + 4" Pleated - MERV 11
**H** = 2" Pleated - MERV 8 + 4" Pleated - MERV 13
**J** = 2" Pleated - MERV 8 + 4" Pleated - MERV 14

**6B: Unit Filter**

**0** = Standard - None
**A** = 2" Pleated - MERV 8
**B** = 4" Pleated - MERV 8
**C** = 4" Pleated - MERV 11
**D** = 4" Pleated - MERV 13
**E** = 4" Pleated - MERV 14
**F** = 2" Pleated - MERV 8 + 4" Pleated - MERV 8
**G** = 2" Pleated - MERV 8 + 4" Pleated - MERV 11
**H** = 2" Pleated - MERV 8 + 4" Pleated - MERV 13
**J** = 2" Pleated - MERV 8 + 4" Pleated - MERV 14

**6C: Final Filter Box**

**0** = Standard - None
**A** = 2" Pleated - 30% Eff.
**B** = 12" Cartridge - MERV 11
**C** = 12" Cartridge - MERV 13
**D** = 12" Cartridge - MERV 14
**E** = 2" Pleated - MERV 8 + 12" Cartridge - MERV11
**F** = 2" Pleated - MERV 8 + 12" Cartridge - MERV13
**G** = 2" Pleated - MERV 8 + 12" Cartridge - MERV14
**H** = 4" Pleated - 30% Eff.
**J** = 4" Pleated - 65% Eff. - MERV11
**K** = 4" Pleated - 85% Eff. - MERV13
**L** = 4" Pleated - 95% Eff. - MERV14

## 3.1.7. H3/V3 Model Options Breakdown

| | | 7 | 8 | 9 | 10 | 11 | 12 | |
|---|---|---|---|---|---|---|---|---|
| H3-ARB-3-0-461D-41F:EE1C-HAA-000-0A0 | - | **D** | **0** | **A** | **0** | **0** | **C** | A00BAP0B0000 |

**7: Filter Options**

**0** = Standard - None
**A** = Magnehelic Gauge
**B** = Clogged Filter Switch
**C** = Options A + B
**D** = Magnehelic Gauge - Unit Filter + ERW Filter
**F** = Clogged Filter Switch - Unit Filter + ERW Filter
**G** = Options D + F

**8: Coil Coating**

**0** = Standard - None
**A** = E-coated Cooling and Heating Coils
**D** = Aluminum Finned Coils + Stainless-Steel Coil Casing
**E** = E-coated Cooling + Heating Coils + Stainless-Steel Coil Casing

**9: Expansion Valve**

**0** = None
**A** = Thermal Expansion Valves

**10: Expansion Valve Control**

**0** = None
**A** = Standard Control

**11: External Paint**

**0** = Standard - None
**A** = AAON Gray Paint
**B** = Special Paint

**12: Tonnage**

**0** = Standard - None
**1** = 18-ton Capacity
**2** = 20-ton Capacity
**3** = 26-ton Capacity
**4** = 60-ton Capacity
**5** = 70-ton Capacity
**A** = 2-ton Capacity
**B** = 3-ton Capacity
**C** = 4-ton Capacity
**D** = 5-ton Capacity
**E** = 6-ton Capacity
**F** = 7-ton Capacity
**G** = 8-ton Capacity
**H** = 10-ton Capacity
**J** = 14-ton Capacity
**K** = 17-ton Capacity
**L** = 22-ton Capacity
**M** = 25-ton Capacity
**N** = 30-ton Capacity
**P** = 31-ton Capacity
**Q** = 34-ton Capacity
**R** = 40-45-ton Capacity
**S** = 50-55-ton Capacity
**T** = 63-ton Capacity
**U** = 9-ton Capacity
**V** = 11-ton Capacity
**W** = 13-ton Capacity
**Y** = 15-ton Capacity
**Z** = 16-ton Capacity

## 3.1.8. H3/V3 Model Options Breakdown

| | 13 | 14A | 14B | 15 | 16 | 17 | |
|---|---|---|---|---|---|---|---|
| H3-ARB-3-0-461D-41F:EE1C-HAA-000-0A0-D0A00C | **A** | **0** | **0** | **B** | **A** | **P** | 0B0000 |

**13: Energy Recovery Type**

**0** = Standard - None
**A** = Energy Recovery Wheel - Total + High CFM, Polymer
**C** = Energy Recovery Wheel - Total + High CFM, 1% Purge, Polymer
**E** = Energy Recovery Wheel - Sensible + High CFM, Polymer
**G** = Energy Recovery Wheel - Sensible + High CFM, 1% Purge, Polymer
**J** = Energy Recovery Wheel - Total + High CFM, Aluminum
**L** = Energy Recovery Wheel - Total + High CFM, 1% Purge, Aluminum

**14A: Power Options**

**0** = Standard Power Block

**14B: Electrical Rating**

**0** = Standard
**J** = 10 kAIC

**15: Control Panel**

**0** = Internal Control Panel
**A** = Small Control Panel - 16" x 16"
**B** = Medium Control Panel - 25" x 22"
**C** = Large Control Panel - 48" x 22"
**D** = Removable Internal Control Panel (Single Side Access)

**16: Shipping Splits**

**0** = Standard - None
**A** = 1 Shipping Split (2 pallets)
**B** = 2 Shipping Splits (3 pallets)
**C** = 3 Shipping Splits (4 pallets)
**D** = 4 Shipping Splits (5 pallets)
**E** = 5 Shipping Splits (6 pallets)
**H** = Special Shipping Split (SPA Required)

**17: Energy Recovery Cabinet**

**0** = Standard - None
**A** = Top RA + Back EA + Back OA Connections
**B** = Side RA + Back EA + Back OA Connections
**G** = OA + EA Dampers - Top RA + Back EA + Back OA Connections
**N** = OA + Economizer Dampers - Top RA + Back EA + Back Connections
**P** = OA + Economizer Dampers - Side RA + Back EA + Back OA Connections
**U** = OA + EA + Economizer Dampers - Top RA + Back EA + Back OA Connections

## 3.1.9. H3/V3 Model Options Breakdown

| | 18 | 19 | 20 | 21 | 22 | 23 |
|---|---|---|---|---|---|---|
| H3-ARB-3-0-461D-41F:EE1C-HAA-000-0A0-D0A00CA00BAP | **0** | **B** | **0** | **0** | **0** | **0** |

**18: Preheat**

**0** = Standard - None

**19: Exhaust Fan**

**0** = Standard - None
**A** = 250 mm Exhaust Fan, 800 W EC Motor
**B** = 310 mm Exhaust Fan, 1.0 kW EC Motor
**C** = 310 mm Exhaust Fan, 1.7 kW EC Motor
**D** = 355 mm Exhaust Fan, 1.7 kW EC Motor
**E** = 450 mm Exhaust Fan, 3.0 kW EC Motor
**F** = 450 mm Exhaust Fan, 6.0 kW EC Motor
**G** = Dual 310 mm Exhaust Fan, 1.0 kW EC Motor
**H** = Dual 310 mm Exhaust Fan, 1.7 kW EC Motor
**J** = Dual 355 mm Exhaust Fan, 1.7 kW EC Motor
**K** = Dual 450 mm Exhaust Fan, 3.0 kW EC Motor
**L** = Dual 450 mm Exhaust Fan, 6.0 kW EC Motor
**M** = Option A + Piezo Ring
**N** = Option B + Piezo Ring
**P** = Option C + Piezo Ring
**Q** = Option D + Piezo Ring
**R** = Option E + Piezo Ring
**S** = Option F + Piezo Ring
**T** = Option G + Piezo Ring
**U** = Option H + Piezo Ring
**V** = Option J + Piezo Ring
**W** = Option K + Piezo Ring
**Y** = Option L + Piezo Ring

**20: Crating**

**0** = Standard - None
**A** = Export Crating
**B** = Forkliftable Base - 5" Base
**C** = Options A + E
**D** = Options A + B
**E** = Shipping Shrink Wrap
**F** = Options B + E
**G** = Options A + B + E

**21: Additional Controls**

**0** = Standard - None
**D** = High Condensate Level Switch

**22: Warranty**

**0** = Standard - 1 Year Parts
**A** = 2 Year Parts Only Warranty (Begins at Date of Shipment)
**B** = 3 Year Parts Only Warranty (Begins at Date of Shipment)
**C** = 4 Year Parts Only Warranty (Begins at Date of Shipment)
**D** = 5 Year Parts Only Warranty (Begins at Date of Shipment)

**23: Type**

**0** = Standard
**X** = Special Pricing Authorization

# 4. GENERAL INFORMATION

AAON® H3 & V3 Series indoor air handling units have been designed for indoor installation only. Units are assembled, wired, charged with dry nitrogen and run-tested at the factory. H3 & V3 Series units are not intended for residential use. Startup and service must be performed by a Factory Trained Service Technician. H3 & V3 Series units are intended for installation up to 3500 meters (11,500 ft).

**WARNING**

Improper installation, adjustment, alteration, service or maintenance can cause property damage, personal injury or loss of life. Startup and service must be performed by a Factory Trained Service Technician. A copy of this IOM must be kept with the unit.

**CAUTION**

These units must not be used for heating or cooling at any time during any phase of construction. Very low return air temperatures, harmful vapors, and misplacement of the filters will damage the unit and its efficiency.

**CAUTION**

This equipment is protected by a standard limited warranty under the condition that initial installation, service, startup and maintenance is performed according to the instructions set forth in this manual. This manual must be read in its entirety prior to installation and before performing any service or maintenance work.
Equipment described in this manual is available with many optional accessories. If you have questions after reading this manual in its entirety, consult other factory documentation or contact your AAON Sales Representative to obtain further information before manipulating this equipment or its optional accessories

**Certification of Gas Heat Models**

a. Certified as a Category IV forced air furnace with or without cooling.
b. Certified for indoor installation only.

**Certification of Steam or Hot Water Heat Models**

a. Certified as a forced air heating system with or without cooling.
b. Certified for indoor installation only.

**Certification of Electric Heat Models**

a. Certified as an electric warm air furnace with or without cooling.
b. Certified for indoor installation only.

**Certification of Cooling Models**

a. Certified as a commercial central air conditioner with or without electrically operated compressors.
b. Certified for indoor installation only.
c. Certified with refrigerant R-454B coils or with chilled water-cooling coils.

## 4.1. Codes and Ordinances

H3 Series units have been tested and certified, by ETL, in accordance with UL Safety Standard 60335-2-40 4th Edition, ANSI Safety Standard Z21.47-2016.

H3 Series units are rated:

- IEC 60529 IPX0
- UL 60335-2-40 Class I Appliance

Size system in accordance with the American Society of Heating, Refrigeration and Air Conditioning Engineers Handbook.

Installation of H3 Series units must conform to the following codes:

- International Mechanical Code (IMC 2018 where revision not specified by State)
- Installation of Air Conditioning and Ventilating Systems Standard (NFPA 90A)
- National Electrical Code (NFPA 70)

Additional conditions for installation outside of these codes may be required for any region, state and/or city within the United States of America. It is the responsibility of the building system designer, qualified technician and person(s) responsible for the operation and maintenance of the AAON equipment to know and adhere to International and local code requirements in conjunction with the requirements of this document.

**CAUTION**

The Clean Air Act of 1990 bans the intentional venting of refrigerant as of July 1, 1992. Approved methods of recovery, recycling, or reclaiming must be followed.

**WARNING**

Coils and sheet metal surfaces present sharp edges and care must be taken when working with equipment.

**WARNING**

Failure to observe the following instructions will result in premature failure of your system and possible voiding of the warranty.

## 4.2. Receiving Unit

When received, check the unit for damage that might have occurred in transit. If damage is found it must be noted on the carrier's Freight Bill. A request for inspection by carrier's agent must be made in writing at once.

Check nameplate to ensure the correct model sizes and voltages have been received to match the job requirements.

If repairs must be made to damaged goods, notify the factory before any repair action is taken in order to protect the warranty. Some alteration, repair, and manipulation of equipment without the manufacturer's consent may void the product warranty. Contact the AAON Technical Support for assistance with handling damaged goods, repairs, and freight claims: (918) 382-6450.

**Note:** Upon receipt, check shipment for items that ship loose such as remote sensors. Consult order and shipment documentation to identify potential loose-shipped items. Loose-shipped items may have been placed inside unit cabinet for security. Installers and owners must secure all doors with locks or nuts and bolts to prevent unauthorized access.

## 4.3. Storage

This equipment is not suitable for outdoor use of storage. If installation will not occur immediately following delivery, store equipment in a dry protected area away from construction traffic and in the proper orientation as marked on the packaging with all internal packaging in place. Secure all loose-shipped items. Unit must be stored in accordance with ASHRAE 15 requirements for machine rooms

## 4.4. Wiring Diagrams

Unit specific wiring diagrams are laminated and affixed inside the controls compartment door.

# 5. INSTALLATION

AAON equipment has been designed for quick and easy installation. Startup and service must be performed by Factory Trained Service Technician.

The H3 or V3 unit can either be shipped assembled or shipped in sections. See the Unit Assembly section of this document for instructions on assembling the sections.

If unit is to be installed indoors, or in areas without sufficient ventilation, provide venting from all pressure relief outlets to outdoors in accordance with ASHRAE 15 requirements.

## 5.1. Locating the Unit

Placement of the unit relative to ductwork, electrical and plumbing must be carefully considered. Return air plenum or duct can be mounted directly to the return air flanges. Use flexible gasket material to seal the duct to the unit.

Verify floor, foundation or suspension support can support the total unit weight, including accessory weights. Unit must be level in both horizontal axes to support the unit and reduce noise and vibration from the unit. If unit is to be installed in areas without sufficient ventilation, provide venting from all pressure relief outlets to outdoors in accordance with ASHRAE 15 requirements.

Installation spaces will need to meet local codes, or in the absence of local codes, ASHRAE 15/CSA B.52.

For units with supplementary electric heat installed with free air discharge, the supply air discharge opening must be located a minimum of 1.83 meters (6 feet) above the finished floor.

Separated combustion gas fired unit combustion air inlets and vent (flue) gas discharges are located in the unit roof. See Figure 1.

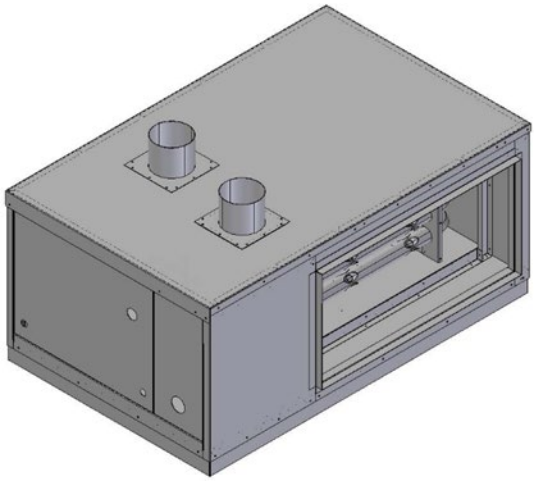

Figure 1: Gas Heater (81% Separated Combustion shown)

The open combustion gas fired unit has a louvered door instead of the combustion air inlet on the unit roof.

**WARNING**

Flue discharge vents must be located at least 120 inches away from any opening through which combustion products could enter the building.

**WARNING**

Distances from adjacent public walkways, adjacent buildings, operable windows and building openings, shall conform to local codes and/or the National Fuel Gas Code, ANSI Z223.1/NFPA 54, or the National Gas & Propane Code, CSA B149.1

### Heatco duct-furnace Installation Requirements

All unit installations must be in accordance with the National Fuel Gas Code ANSI Z223.1 (NFPA 54) in the United States and Can/CGA-B149 Installation Code in Canada, and all other applicable local codes and ordinances. These requirements include but are not limited to:

- Furnace Location and clearances
- Circulating airflow and ductwork
- Combustion air supply to the heating equipment
- Venting of the products of combustion (flue gases)
- Gas supply, piping and connections

Refer to the provided Heatco IOM for all installation requirements.

Allow adequate space for piping access and panel removal. **To ensure proper access for field service, maintain minimum clearances for field piping and other obstructions as indicated in Table 1 and Table 2.** Consult local building codes for additional service clearance requirements.

Field provided wiring will be required between the AHU and gas heater for the auxiliary limit switch, control signals, and power. Control and sensor wiring should use 18-gauge wire, while power wiring for the gas heater should use 14-gauge wire.

Condensate drain connection for the coils is located on the access side of the unit. The high efficiency gas heater condensate drain connection is also located on the access side of the Heatco cabinet on an H3 unit and on the front side of the Heatco cabinet on a V3 unit. See Figure 2 and Figure 3 for unit orientation.

Table 1: H3 & V3 Series Clearances (Metric)

| Unit Size | Access Side Clearance[2] | Opposite Access Side[3&4] | Top or Bottom[5] |
|---|---|---|---|
| H3-**A** | 0.91 meters | 15.3 cm | 55.9 cm |
| H3-**B** | | | 57.2 cm |
| H3-**C** | | | 68.6 cm |
| H3-**D** | 1.14 meters | | 68.6 cm |
| H3-**E** | 1.52 meters | | 86.4 cm |
| | | | |
| **Unit Size** | **Access Side Clearance[2]** | **Opposite Access Side[3]** | **Front or Back[3]** |
| V3-**A** | 0.91 meters | 15.3 cm | 15.3 cm |
| V3-**B** | | | |
| V3-**C** | | | |
| V3-**D** | | | |
| V3-**E** | | | |

Table 2: H3 & V3 Series Clearances (Imperial)

| Unit Size | Access Side Clearance[2] | All Other Sides[3&4] | Top or Bottom[5] |
|---|---|---|---|
| H3-**A** | 36 in. | 6 in. | 22 in. |
| H3-**B** | | | 22.5 in. |
| H3-**C** | | | 27 in. |
| H3-**D** | 45 in. | | 27 in. |
| H3-**E** | 60 in. | | 34 in. |
| | | | |
| **Unit Size** | **Access Side Clearance[2]** | **Opposite Access Side[3]** | **Front or Back[3]** |
| V3-**A** | 36 in. | 6 in. | 6 in. |
| V3-**B** | | | |
| V3-**C** | | | |
| V3-**D** | | | |
| V3-**E** | | | |

1. Values in table apply to both combustible and non-combustible surfaces.
2. Additional clearance may be required to allow for coil removal. See Table 3
3. May be installed flush depending upon local codes. Maintain a minimum of 6 inches to combustibles for installation of Heatco duct furnace
4. Heatco duct-furnaces with back-to-back heat exchanger configuration (H3-E with 400 MBH or 360 MBH) require 36 in. for each access side. All other applicable installation considerations are also required.
5. Top or bottom clearance is 15.2 centimeters (6 inches) if no internal control panel. For units with internal control panel, the clearance in the table is needed for either top or bottom, but not both. The clearance is for supply fan removal.

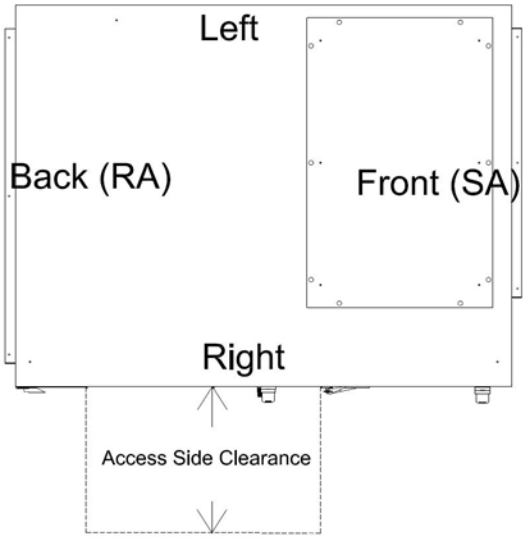


Figure 2: Minimum Clearance Required for Access to Unit (H3 Series plan view)

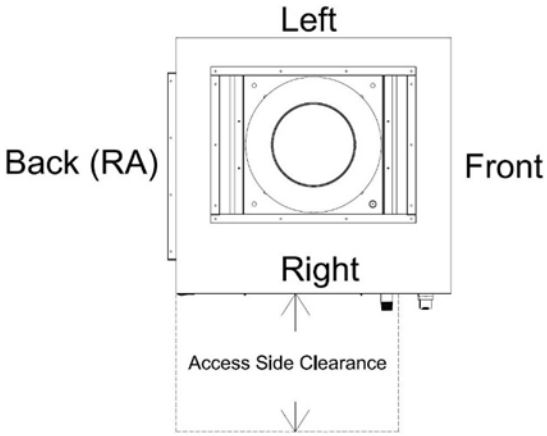


Figure 3: Minimum Clearance Required for Access to Unit (V3 Series plan view)

Table 3: Coil Removal Clearances

| Unit Size | Access Side | |
|---|---|---|
| H3-**A** | 0.8 m | 2.7 ft |
| H3-**B** | 1.1 m | 3.7 ft |
| H3-**C** | 1.6 m | 5.2 ft |
| H3-**D** | 2.2 m | 7.2 ft |
| H3-**E** | 2.6 m | 8.5 ft |
| | | |
| V3-**A** | 0.8 m | 2.7 ft |
| V3-**B** | 0.8 m | 2.7 ft |
| V3-**C** | 1.1 m | 3.7 ft |
| V3-**D** | 1.5 m | 4.8 ft |
| V3-**E** | 1.5 m | 4.8 ft |

*Internal Control Panel*

H3 units with internal control panel have removable access panels on the top and bottom of the supply fan section. The supply flanges can be interchanged with the access panels, if necessary, as the openings have the same dimensions, except on size E.

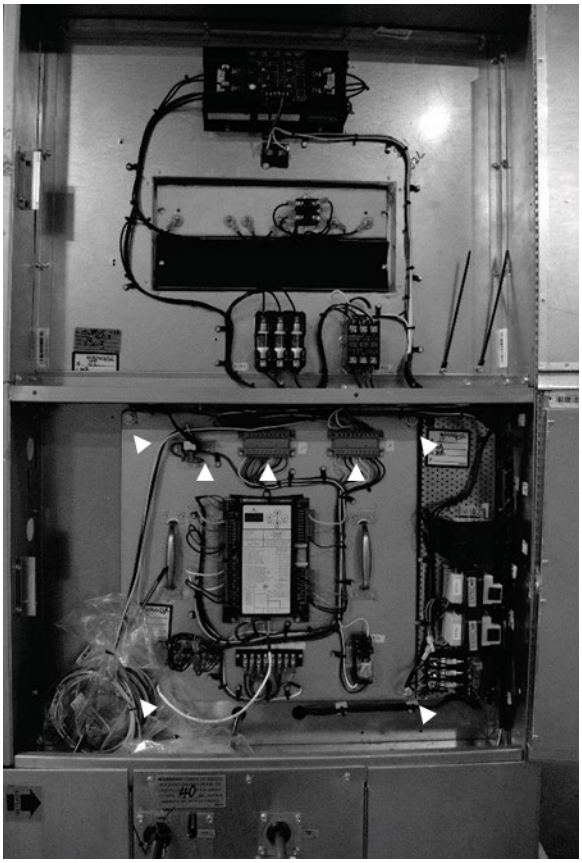

Figure 4: Removeable Internal Control Panel

Figure 5: H3 Internal Control Panel With Top Access Panel Removed

V3 units with internal control panel have removable access panels on the front and back of the supply fan section. V3 units that have energy recovery only have one removable access panel on the front of the unit. The supply flanges can be interchanged with the access panels, if necessary, as the openings have the same dimensions.

Figure 6: V3 Internal Control Panel

*Removable Internal Control Panel*

V3 units with removable internal control panel have a removable access panel on the access side of the unit. Removing the electrical panel gives access to the supply fan. To access the supply fan, disconnect the wiring that connects from the unit to the removable control panel. Then remove the four corner bolts and use the handles to remove the electrical panel.

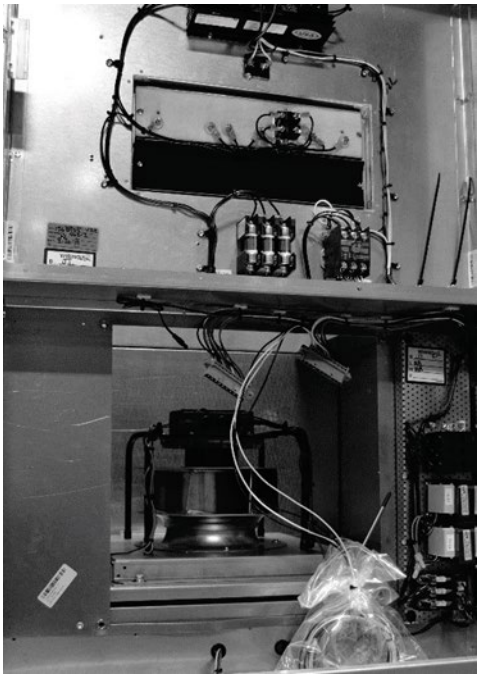

Figure 7: Supply Fan Access after

*Floor Mounted Units*

Make sure the unit is level and mounted on a field supplied platform with a minimum height to allow for proper depth of the condensate line p-trap. Other installation provisions may be necessary according to job specifications. V3 Series vertical air handling units are designed for up flow applications only.

*Suspended Units*

V3 Series vertical air handling units are not equipped for suspended installations.

H3 Series horizontal air handling units are equipped for suspended installations. Lift the unit into position by supporting the unit with the skid used for shipping. The air handling unit must be installed level and care must be taken to prevent damage to the cabinet.

Other installation provisions may be necessary according to job specifications. Figure 8 and Figure 9 show factory recommended methods for suspended installations. It is the responsibility of the specifying engineer or installing contractor to ensure the installation is structurally safe and sound.

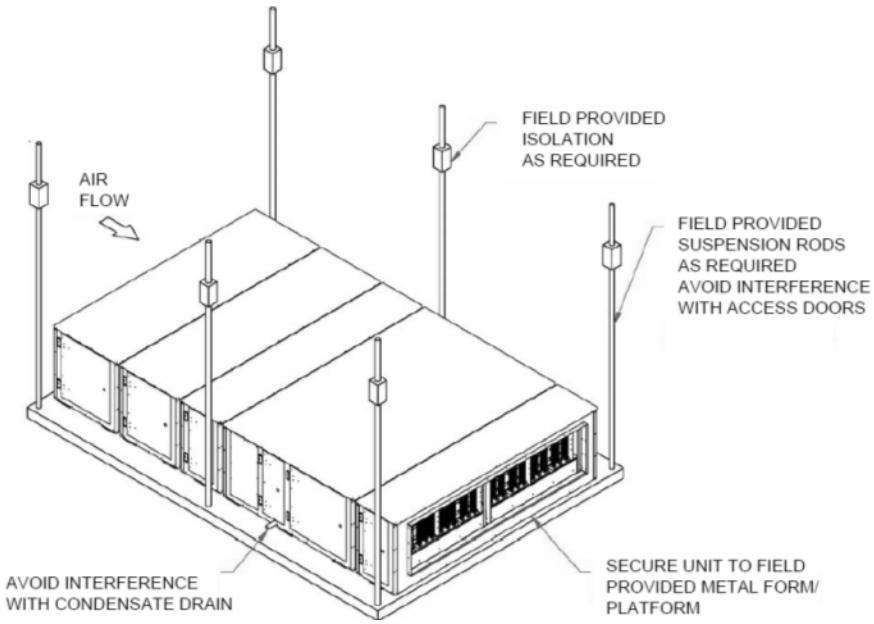


Figure 8: H3 Series Platform Suspension Installation

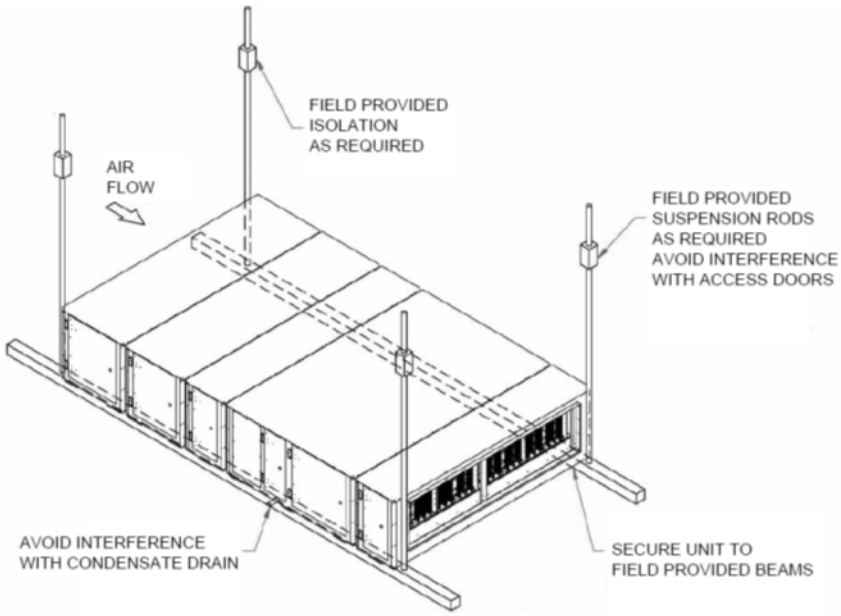


Figure 9: H3 Series Parallel Beam Suspension Installation

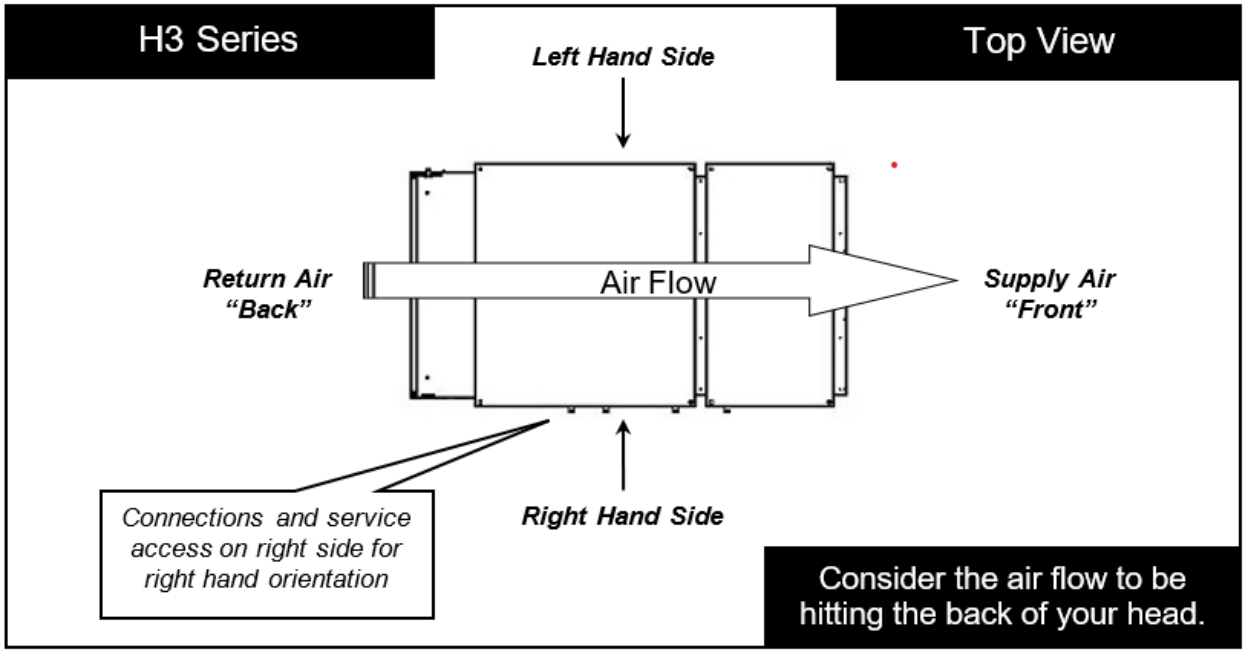


Figure 10: H3 Series Unit Orientation

**Note:** Access doors may be on the "left" or "right" side as designated by the unit orientation on the configurator string. "Back" will always be the same side as the pre-filter and return air opening. "Front" will always be the side opposite the pre-filter and return air opening.

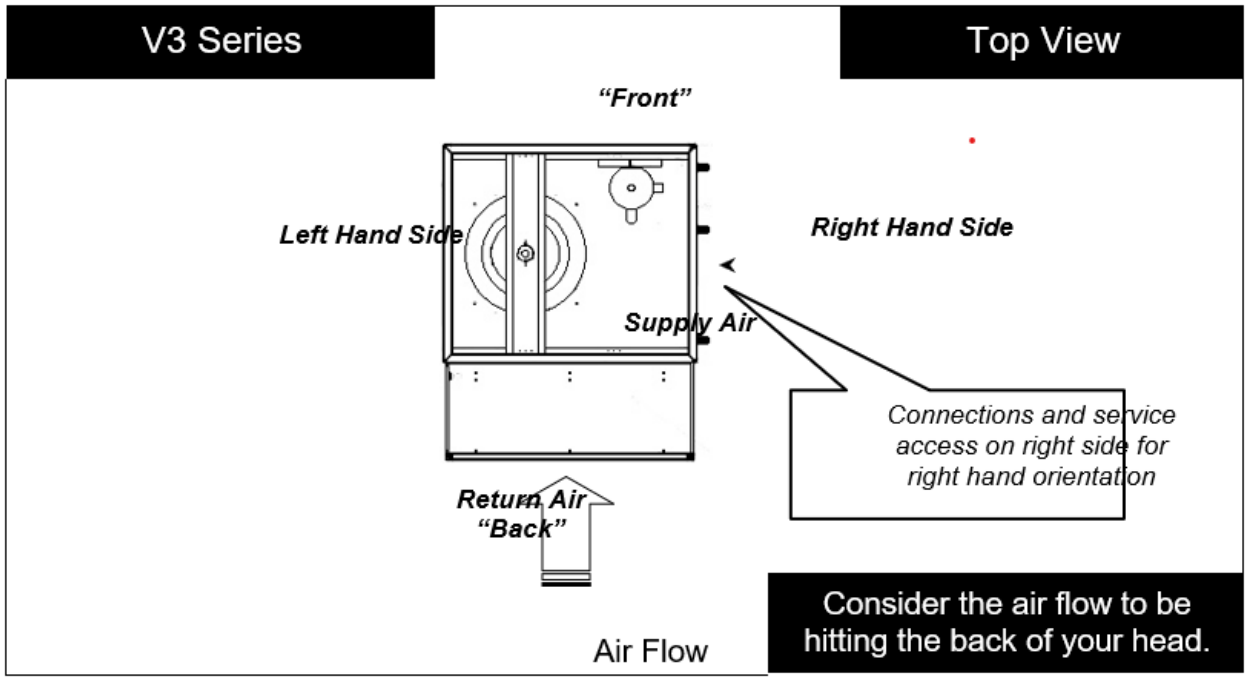


Figure 11: V3 Series Unit Orientation

**Note:** Access doors may be on the "left" or "right" side as designated by the unit orientation on the configurator string. "Back" will always be the same side as the pre-filter and return air opening. "Front" will always be the side opposite the return air opening.

## 5.2. Lifting and Handling the Unit

Before lifting unit, be sure that all shipping material has been removed from unit.

Care must be taken if using spreader bars, blocking or other lifting devices to prevent damage to the cabinet, coil or fans.

If a unit must be tipped on its side to fit through an opening, the coil and blower should be removed from the unit and re-installed after the unit is fully upright.

**WARNING**

*UNIT HANDLING*

Incorrect lifting can cause damage to the unit, injury or death. Lifting equipment capacity must exceed unit weight by an adequate safety factor. Always test lift unit not more than 61 centimeters (24 inches) high to verify proper center of gravity lift point.

## 5.3. Unit Assembly

Although H3 & V3 Series units are shipped factory assembled as standard, the unit may be ordered as shipping splits for certain applications such as for assembly in existing structures where modules must be manipulated separately. If the unit was ordered as shipping splits, then they must be assembled in the field.

Locate the schematic in the equipment's literature packet.

1. Identify and Situate Splits
   a. H3 Units can have the following ship split sections:
      1. Mixing Box
      2. Air Handler
      3. Final Filter
      4. Energy Recovery
      5. Electric Heater/HeatBoost Gas Heater

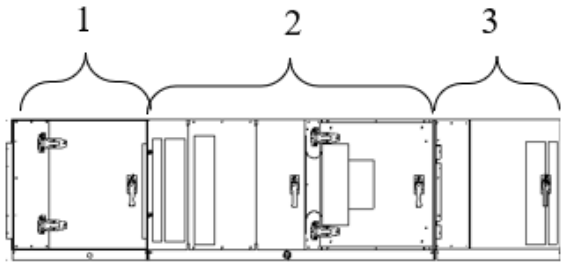


Figure 12: H3 Schematic with (1) Mixing Box, (2) Air Handler, and (3) Final Filter

   b. V3 Units can have the following ship split sections:
      1. Exhaust Fan
      2. Energy Recovery
      3. Air Handler
      4. Pre Filter
      5. Mixing Box
      6. Electric Heater/HeatBoost Gas Heater

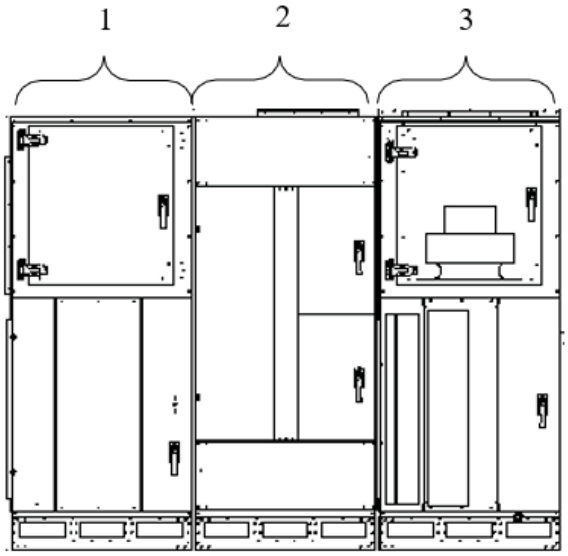


Figure 13: V3 Schematic with (1) Exhaust Fan, (2) Energy Recovery, (3) Air Handler

2. Connect Power and Control Wiring between sections

H3 & V3 Series units are equipped with low and high voltage quick connects to connect wiring from one section to the next with the exception of gas heat. It might be necessary to increase the hole size in the cabinet in order to get the quick connector through the opening. See the Electrical section for more information.

Gas heat will require field wiring for limit switches and power. The wiring diagram will show field wiring and terminals for both the gas heater and AHU. Use 18-gauge wire for the control wiring (T1, T2, T7/T11, T8/T10) and 14-gauge wire for the power wiring (L1, L2). The main limit switch will need to be field installed and wired in the ductwork down stream of the gas heater.

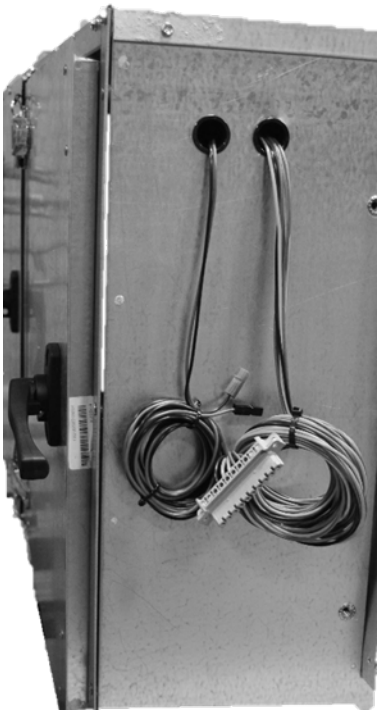

Figure 14: Low & High Voltage Quick Connect

A color-coded wiring diagram is laminated and affixed to the inside of the control compartment access door.

H3 & V3 Series units are equipped with a single point power connection. Wiring from the unit to external controls and power sources must be provided in the field.

3. Connect Sections

Remove the access side panel from the mixing box by removing the screws. It is also helpful to remove the access side panel from the air handling unit module.

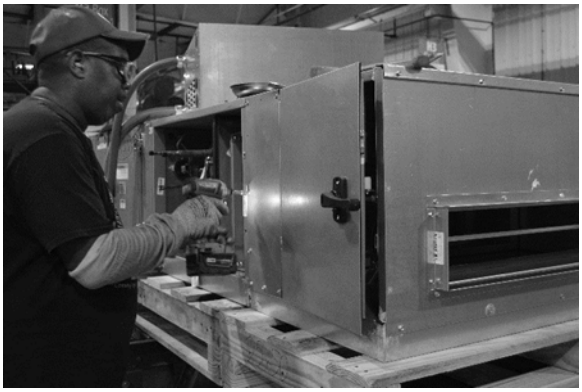

Figure 15: Remove Access Panel

Apply 13 mm (½") thick, 16 mm (5/8") wide adhesive gasket around the edges of the box without the flanges.

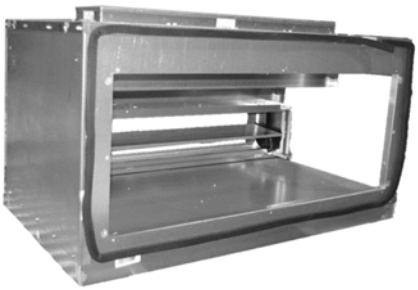

Figure 16: Apply Gasket

Push the mixing box and air handling sections together so that the flange from the air handling section is inside of the mixing box.

Figure 17: Connect Sections

Use clamps to pull the sections together on the inside of the unit.

Figure 18: Clamp Sections

Use bar clamps or other non-destructive winching device to pull the tops of the modules together tightly.

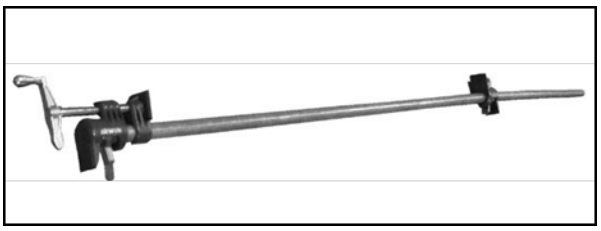

Figure 19: Bar Clamp

At each of the pre-drilled holes in the flange, drill 8mm (5/16") hex head self-tapping screws to secure the two sections together. You may need a screwdriver extension to reach all of them.

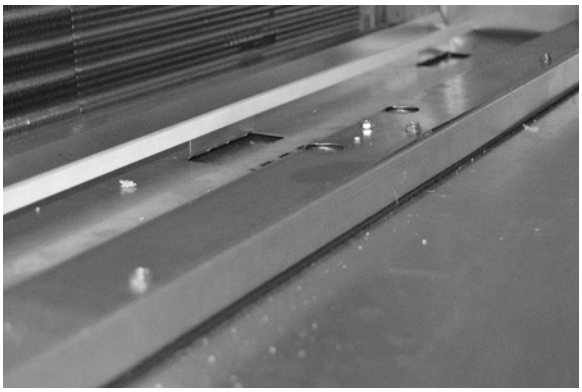

Figure 20: Flange Overlap

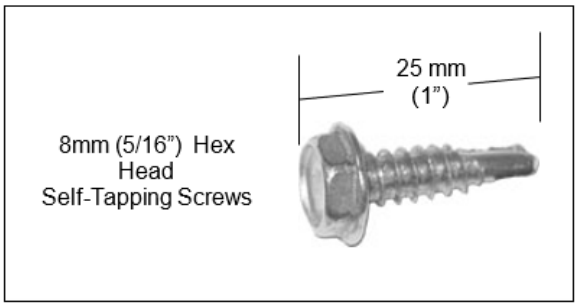


Figure 21: Self-Tapping Screw

V3 units with a forklift base must be bolted together at the connection sections.

Figure 22: Forklift Base Assembly

4. Final Sealing

It is very important to keep air from infiltrating the unit cabinet. Seal all piping penetrations with Armaflex, Permagum or other suitable sealant. Also seal around drain connections,

electrical connections and all other inlets where air may enter the cabinet. This is especially important when the unit is installed in an unconditioned area.

Joint straps are provided with some shipping splits to help hold sections together and help prevent air leakage. Secure them across the appropriate joints with sheet metal screws.

**CAUTION**

Proper sealing of the electrical and piping entries into the unit must be verified. Failure to seal the entries may result in damage to the unit and property.

## 5.4. Control Box

Some H3 & V3 units include an external control box that must be mounted in the field. The control box is designed with two mounting holes on the back panel. Make sure the wall fasteners can hold the weight of the control box. See Figure 23

External control boxes provided with conduit exceeding 1.8 m (6ft) in length must have conduit supported in compliance with the National Electrical Code NFPA 70. FMC and LMFC conduit must be supported within 30.5 cm (12 in.) of both the unit and the external control box and at intervals no more than 1.4 m (4.5 ft) along the length.

Figure 23: Back View External Control Box

## 5.5. Electrical

For units not equipped with incoming power disconnect, means for all pole disconnection must be provided in the fixed wiring in accordance with local or national electrical codes. Verify the unit nameplate agrees with power supply. Connect power and control field wiring as shown on the unit specific wiring diagram provided laminated and attached to the door in the controls compartment.

Table 4: Nameplate Voltage Markings & Tolerances

| Hz | Nameplate Voltage | Nominal System Voltage | Operating Voltage Range [1] | | Acceptable Performance Range[2] | |
|---|---|---|---|---|---|---|
| | | | Min | Max | Min | Max |
| 60 | 115 | 120 | 104 | 127 | 108 | 126 |
| | 208/230 | 208/240 | 187 | 254 | 187 | 252 |
| | 208 | 208 | 187 | 228 | 187 | 228 |
| | 230 | 240 | 208 | 254 | 216 | 252 |
| | 265 | 277 | 240 | 293 | 249 | 291 |
| | 460 | 480 | 416 | 508 | 432 | 504 |
| | 575 | 600 | 520 | 635 | 540 | 630 |
| 50 | 230 | 230 | 198 | 254 | 208 | 254 |
| | 400 | 400 | 344 | 440 | 360 | 440 |

**Note:** Operating voltage is the min and max voltage for which the unit can function. Never operate outside of this min and max voltage.

**Note:** The Acceptable Performance Range is the min and max voltage for which the unit performance is designed and rated to give acceptable performance.

Route power and control wiring, separately, through the utility entry in the unit. Do not run power and control signal wires in the same conduit.

**WARNING**

The foam insulation releases dangerous fumes when it is burnt. Do not cut a foam part with a cutting torch or plasma cutter. Do not weld to a foam filled part.

All units require field supplied electrical overcurrent and short circuit protection. Device must not be sized larger than the Maximum Overcurrent Protection (MOP) shown on the unit nameplate.

Codes may require a disconnect switch be within sight of the unit.

It is recommended that the field-installed overcurrent protection or disconnect switch not be installed on the unit.

On units with external control box, electrical supply can enter through either side of the controls compartment.

Figure 24: External Control Box Electrical Connections

On units with internal control panel, electrical supply can enter through the supply air side (front) of the H3 unit.

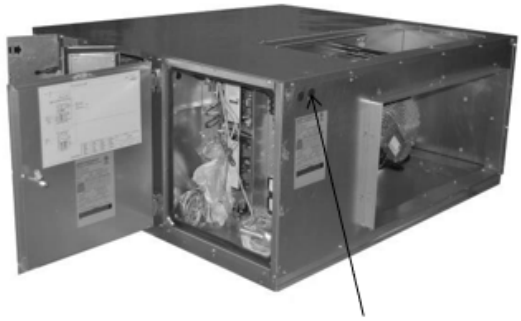

Figure 25: H3 Internal Control Panel Electrical Connections

A single point connection to a terminal block is provided. High voltage conductors must enter the control panel in a separate opening and separate conduit than low voltage conductors.

Field wired disconnecting means of power, external to the unit, must be incorporated in the fixed wiring in accordance with the wiring rules and provide full disconnection of all poles under overvoltage Category III conditions.

**WARNING**

Electric shock hazard. Before attempting to perform any installation, service, or maintenance, shut off all electrical power to the unit at the disconnect switches. Unit may have multiple power supplies. Failure to disconnect power could result in dangerous operation, serious injury, death, or property damage.

To pass wires through the wall or roof of the unit, cut a hole and pass the conduit through it. Use the following procedure to cut a round hole in a foam panel.

*Cutting Electrical Openings*

1. Locate the placement of the hole. Be sure that the conduit will not interfere with the operation of any component or prevent access of any door or removable panel. Field cut openings must be a minimum of 15.24 centimeters (6 inches) away from all components and wiring to prevent damage due to drilling or cutting.
2. Drill a pilot hole all the way through the foam panel.
3. Using a hole saw, cut the hole through the metal on both sides of the foam part.
4. With a knife cut the foam out of the hole.
5. After the conduit is installed in the hole caulk the entire perimeter of the hole on both sides with an industrial grade silicone sealant or a duct seal compound.

**CAUTION**

Proper sealing of the electrical entries into the unit must be verified. Failure to seal the entries may result in damage to the unit and property.

If a larger cut-out is needed for additional duct connections not provided by the factory, it is very important that the foam be completely sealed. Fabricate insulation covers from sheet metal to cover the foam at the cut. Seal the edges and corners not covered using silicone caulking or a duct seal compound.

If a reciprocating saw is used to make the cut-out, take care that the metal skins of the foam part do not separate from the foam resulting in reduced structural integrity of the part.

Size supply conductors based on the unit Minimum Current Ampacity (MCA) rating. Supply conductors must be rated a minimum of 75°C (167°F).

Protect the branch circuit in accordance with code requirements. The unit must be electrically grounded in accordance with local codes, or in the absence of local codes, the current National Electric Code, ANSI/NFPA 70 or the current Canadian Electrical Code CSA C22.1.

**Note:** Units are factory wired for 208V, 230V, 460V or 575V. In some units, the 208V and 230V options may also be provided in single or three phase configurations. The transformer configuration must be checked by a qualified technician prior to startup.

Wire power leads to the unit's terminal block or main disconnect. All wiring beyond this point has been completed by AAON and cannot be modified without effecting the unit's agency/safety certification.

Supply voltage must be within the min/max range shown on the unit nameplate. Available short circuit current must not exceed the short circuit current rating (SCCR) shown on the unit nameplate.

**CAUTION**

Three phase voltage imbalance will cause motor overheating and premature failure.

Three phase voltage imbalance will cause motor overheating and premature failure. The maximum allowable imbalance is 2%.

Voltage imbalance is defined as 100 times the maximum deviation from the average voltage divided by the average voltage.

Example:

(221V+230V+227V)/3 = 226V, then 100*(226V-221V)/226V = 2.2%, which exceeds the allowable imbalance.

Check voltage imbalance at the unit disconnect switch and at the compressor terminal. Contact your local power company for line voltage corrections.

A qualified technician must check for proper motor rotation and check blower motor amperage listed on the motor nameplate is not exceeded.

**CAUTION**

Rotation must be checked on all MOTORS of three phase units. Supply fan motors must all be checked by a qualified service technician at startup and any wiring alteration must only be made at the unit power connection.

Wire control signals to the unit's low voltage terminal block located in the controls compartment.

If any factory-installed wiring must be replaced, use a minimum 105°C (221°F) type AWM insulated conductors.

*Thermostat Control Wiring*

If a thermostat is used for unit control, locate the thermostat on an inside wall that is between 1.2 and 1.5 meters (4–5 feet) above the floor where it will not be subjected to drafts, sun exposure, or heat from electrical fixtures of appliances. Control wiring must deliver adequate voltage to components to assure proper operation. Control voltage returning from controller circuit must be a minimum of 21 VAC. To assure proper wiring use the following chart to determine the allowable wiring distances.

Table 5: Control Wiring

| Wire Size (Standard) Copper Conductors Only | Total Wire Distance Allowable | |
|---|---|---|
| 20 AWG | 60.96 m | 200 ft |
| 18 AWG | 106.7 m | 350 ft |
| 16 AWG | 152.4 m | 500 ft |
| 14 AWG | 228.6 m | 750 ft |
| 12 AWG | 381.0 m | 1250 ft |

*Total Wire Distance Allowable = (Quantity of Control Wires) x (Control Wire Distance)*

Take the total wire distance allowable and divide by the number of wires to be connected. This indicates the distance allowable for that size wire. The wiring to the unit must not exceed the total wire distance allowable. If the voltage at the connectors is less than 21 VAC, isolation relays must be installed. If under external control 21 VAC must be field verified.

All external devices must be powered via a separate external power supply.

Example:

A total of 8 wires must be pulled 75 ft (22.9 m) to a control the unit. What size wire must be used?

According to the Table 5, 16 AWG allows for 63ft (500 ft/8 wires) and 14 AWG allows for 94ft (750 ft/8 wires). Thus, 14 AWG must be used.

*Fuses and Circuit Breakers*

The interrupting rating of fuses and circuit breakers is to be determined based on the KAIC rating of the unit. Refer to the wiring diagram for fuse sizing.

Table 6: 35 KAIC Fuse Sizing

| 35 KAIC Construction | | |
|---|---|---|
| Component | Description | Interrupting Rating (kA) |
| Fuse | Class CC, 600V, 0.5A–30A | 200 |
| Fuse | Class J, 600V, 35A–600A | 200 |
| Disconnect | 3P, 600V, 15A–600A | 35 |

Table 7: 65 KAIC Fuse Sizing

| 65 KAIC Construction | | |
|---|---|---|
| Component | Description | Interrupting Rating (kA) |
| Fuse | Class CC, 600V, 0.5A–30A | 200 |
| Fuse | Class J, 600V, 35A–600A | 200 |
| Disconnect | 3P, 600V, 15A - 600A | 65 |

## 5.6. Duct Connection

Attach duct to flanges provided on the unit. The installer is responsible for sealing ducts to the flanges to prevent water leaks.

**CAUTION**

Ensure that wires are protected from damage and wear caused by normal operation of unit and environmental factors.

See Figure 10 and Figure 11 for return and supply air duct locations. Size the ductwork in accordance with the ASHRAE Handbook. Ductwork must be installed in accordance with NFPA Standard 90A.

When attaching duct to the unit, use a flexible/compressible material rated for duct connections. A 7.6 centimeter (3 inch) flexible connector for both return and supply duct connections is recommended.

## 5.7. Condensate Drain Pans

Units require field-installed drain p-traps and lines to be connected to the condensate drain pans of the unit.

For condensate drain lines, the line must be the same pipe size or larger than the drain connection, include a p-trap, and pitch downward toward drain. Use an air break with long runs of condensate lines. See Installation section of this manual for more information.

**CAUTION**

Do not operate unit without a p-trap. Failure to install a p-trap may result in overflow of condensate water.

## 5.8. Condensate Drain Piping

A p-trap and drain line must be installed on the drain connection, with the p-trap not to exceed 15.3 cm (6") from the drain connection. The lines must be the same pipe size or larger than the drain connection, include a p-trap, and pitch downward toward drain. Use an air break with long runs of condensate lines.

**CAUTION**

Use an emergency drain pan for all applications where a risk of water damage to surrounding structure or furnishings. Refer to local codes.

Draw-through cooling coils will have a negative static pressure in the drain pan area. This will cause an un-trapped drain to back up due to air being pulled up through the condensate drain piping.

Condensate drain trapping and piping must conform to all applicable governing codes.

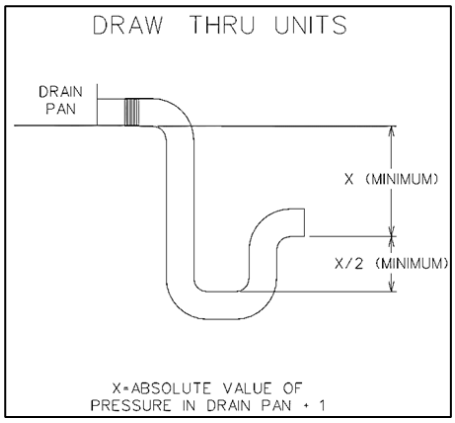


Figure 26: Drain Trap

Table 8: Drain Trap Dimensions (Imperial)

| Draw-Through | | |
|---|---|---|
| Drain Pan Pressure | Trap Dimensions | |
| Negative Static | X | X/2 |
| (inches of water) | (in.) | (in.) |
| -0.50 | 1.50 | 0.75 |
| -1.00 | 2.00 | 1.00 |
| -1.50 | 2.50 | 1.25 |
| -2.00 | 3.00 | 1.50 |
| -2.50 | 3.50 | 1.75 |
| -3.00 | 4.00 | 2.00 |
| -3.50 | 4.50 | 2.25 |
| -4.00 | 5.00 | 2.50 |

Table 9: Drain Trap Dimensions (Metric)

| Draw-Through | | |
|---|---|---|
| Drain Pan Pressure | Trap Dimensions | |
| Negative Static | X | X/2 |
| (mm of mercury) | (mm) | (mm) |
| -0.93 | 38.10 | 19.05 |
| -1.87 | 50.80 | 25.40 |
| -2.80 | 63.50 | 31.75 |
| -3.74 | 76.20 | 38.10 |
| -4.67 | 88.90 | 44.45 |
| -5.60 | 101.60 | 50.80 |
| -6.54 | 114.30 | 57.15 |
| -7.47 | 127.00 | 63.50 |

**Note:** The drain pan connection is a 24.4mm (1") MPT fitting.

The X dimension on the draw-through trap must be at least equal to the absolute value of the negative static pressure in the drain pan plus 2.54 centimeters (one inch). To calculate the static pressure at the drain pan add the pressure drops of all components upstream of the drain pan, including the cooling coil, and add the return duct static pressure. Include the dirt allowance pressure drop for the filters to account for the worst-case scenario.

The height from top of the bottom bend of the trap to the bottom of the leaving pipe must be at least equal to one half of the X dimension. This ensures that enough water is stored in the trap to prevent losing the drain seal during unit startup

**Note:** The absolute value of the fan inlet pressure will always be greater than or equal to the absolute value of the static pressure in the drain pan on draw-through units, so the fan inlet pressure is a safe value to use for the drain pan static pressure.

# 6. STARTUP

(See back of the manual for startup form)

**WARNING**

Improper installation, adjustment, alteration, service or maintenance can cause property damage, personal injury or loss of life. Startup and service must be performed by a Factory Trained Service Technician. A copy of this IOM must be kept with the unit.

**WARNING**

Electric shock hazard. Shut off all electrical power to the unit to avoid shock hazard or injury from rotating parts.

During startup, it is necessary to perform routine checks on the performance of the unit. This includes checking of the air flow, the air filters and refrigerant charge.

## 6.1. Filters

Do not operate the unit without filters in place. Operation of the equipment without filters in place can result in clogged coils. Units are shipped with the selected filters installed. If filters have been removed during installation, open the filter access door and re-install the correct filters with the airflow indicator arrows pointing in the direction of airflow.

Check filters after a few days of operation after the unit has been started up as dust and debris from construction may cause premature filter loading. Replace the filters if necessary.

## 6.2. Supply Fans

H3 & V3 Series units are equipped with direct drive backward curved plenum supply fan assemblies that deliver the air volume specified according to unit size and job requirements.

## 6.3. Fan Air Flow Adjustment

For single set screw applications, tighten the set screw to the required torque setting

Table 10 using a calibrated torque wrench. For double set screw applications, tighten one set screw to half of the required torque setting Table 10 using a calibrated torque wrench. Tighten the second set screw to the full required torque setting then tighten the first set screw to the full required torque setting.

Table 10: Plenum Fan Set Screw Specifications

| SET SCREW DIAMETER | TORQUE (Nm [IN-LBS]) |
|---|---|
| 6.4 mm (1/4") | 9 [80] |
| 7.9 mm (5/16") | 14.2 [126] |
| 9.5 mm (3/8") | 27.12 [240] |

The gap tolerances that are allowed between the blower and the inlet cone for the plenum fan blowers are shown in Figure 27 . The inlet cone can be moved as necessary to center the cone in relation to the blower. The blower can be moved on the motor shaft to set the correct overlap. These tolerances are critical to the performance of the blower.

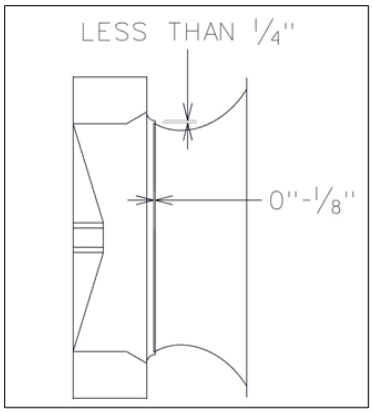


Figure 27: Plenum Fan Gap Tolerances

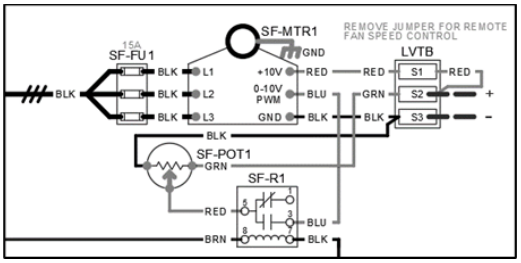


**CAUTION**

Before completing startup and leaving the unit a complete operating cycle must be observed to verify that all components are functioning properly.

# 7. OPERATION

Unit operations must be controlled with the thermostat or unit controller, never at the main power supply, except for emergency or complete shutdown of the unit.

## 7.1. Refrigerant Detection System

Each DX unit is equipped with a Refrigerant Detection System (RDS) to detect leaked refrigerant within the conditioned airstream and in the cabinet. The RDS consists of refrigerant detection sensors in the conditioned airstream and cabinet connected to a corresponding mitigation board. V3E units with a shipping split between the coil and fan sections will require the sensor cable to be plugged into the A2L sensor. The cable will be wired to the A2L mitigation board and coiled in the control section. All other H3/V3 sizes will arrive with the A2L sensor wired. In the event of a refrigerant leak, the RDS sensors will send an alarm to the mitigation board. Each A2L mitigation board is equipped with alarm output in the form of a NO/NC relay.

Applications using AAON VCC-X controls:

In the event of an airstream RDS alarm, the compressor operation is disabled. In the event of a Cabinet RDS alarm, compressor operation and gas heat operation is disabled. The indoor blower, and any form of heat other than gas, will resume normal operation. RDS alarm outputs are available via BACNet communication through the VCC-X controller.

Applications not using AAON VCC-X controls:
Mitigation board outputs will be wired to the low voltage terminal block for field connections.

In all cases, on A2L alarm, the supply fan will be enabled to provide circulation airflow in accordance with UL 60335-2-40. The mitigation board and VCCX-X board will remain in alarm state for five minutes after the RDS sensor has cleared the alarm below the concentration setpoint.

For VAV applications and applications utilizing zone dampers, the VAV boxes and zone dampers must be wired to the mitigation board output to open all VAV boxes and zone dampers to allow for the required circulation airflow to prevent stagnation of leaked refrigerant. Other applications requiring additional refrigerant leak mitigation measures as required by local code and ASHRAE 15 may be notified of detected refrigerant by this alarm output.

Verify functionality of RDS by removing sensor connection at the mitigation board and ensuring that all sequences above take place, including the opening of VAV boxes and zone dampers and additional mitigation procedures, if applicable. Refer to the A2L Mitigation Board Technical Guide for operation. See Figure 28: A2L Sensor Location for sensor location.

Smoke detectors may override the RDS alarm functions depending on jumper placement.

**CAUTION**

Refrigerant sensors may only be replaced with manufacturer approved sensors.

**CAUTION**

Certain applications may allow the unit to bring in unconditioned air. Freeze protection needs to be considered in the final application.

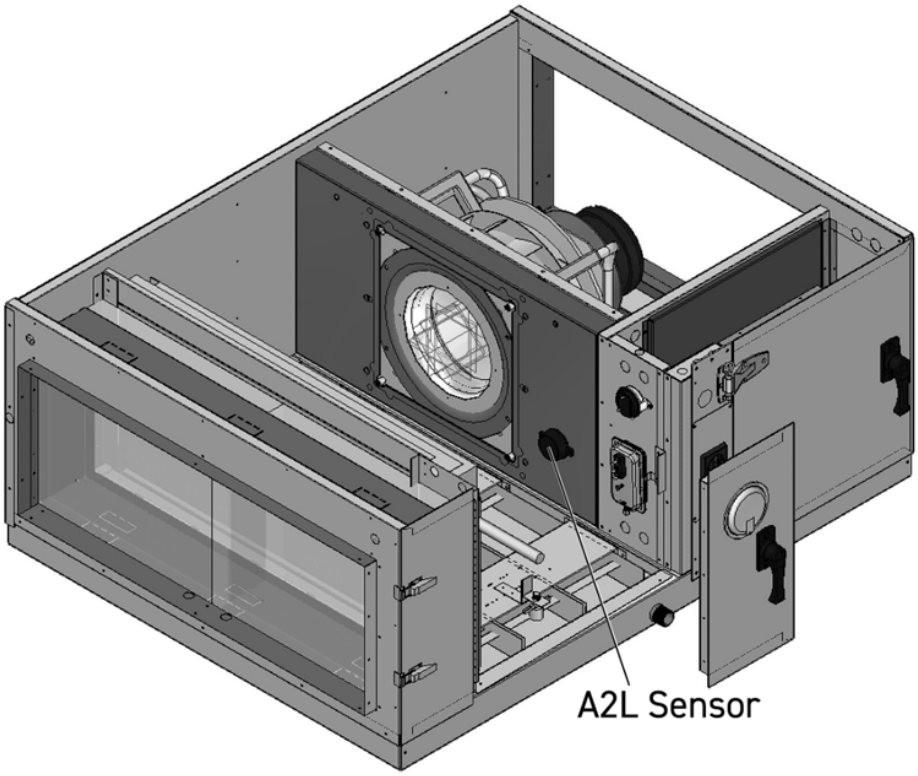


Figure 28: A2L Sensor Location

**CAUTION**

Additional mitigation procedures or fault conditions initiated outside of AAON controls are the responsibility of the Building Engineer and must give appropriate priority in accordance with local codes.

## 7.2. Thermostat Operation

*Heating*

- Thermostat system switch - "Heat"
- Thermostat fan switch - "Auto" or "On"
- Thermostat temperature set to desired point.

*Cooling*

- Thermostat system switch - "Cool"
- Thermostat fan switch - "Auto" or "On"
- Thermostat temperature set to desired point.

*Air Circulation*

- Thermostat system switch - "Off"
- Thermostat fan switch - "Auto" or "On"
- No change of the thermostat temperature.

With these settings, the supply blower will run continuously but the supply air will not be heated, cooled, or dehumidified.

*System Off*

- Thermostat system switch - "Off"
- Thermostat fan switch - "Auto"
- No change of the thermostat temperature.

With these settings the system is shut down, with the exception of control system power.

*Night and Weekend Unoccupied Operation*

To reduce the operating time of the unit when the space is unoccupied, such as nights and weekends, it is recommended that the temperature setting be raised about 2.8 °C (5°F) while unoccupied during the cooling season and lowered about 5.6°C (10°F) during the heating season.

## 7.3. Split System DX Cooling Operation and Control

When a call for cooling (G and Y1, Y2, etc.) is made the supply blower motors and compressors will energize.

Refrigerant sensors are located near the evaporator coil to detect leaked refrigerant. See Refrigerant Detection System section for more information.

## 7.4. Chilled Water or Non-Compressorized DX Cooling Operation

Valve controls for chilled water-cooling coil and non-compressorized DX coil are by others.

## 7.5. Steam or Hot Water Preheating Operation

Valve control for steam and hot water heating coils are by others. Heating is accomplished by passing steam or hot water through the steam or hot water coil assembly.

## 7.6. Electric Heating Operation

When a call for heating (G and W1, W2, etc.) is made the supply fan motors and electric resistance heaters will energize. Heating is accomplished by passing electrical current through a specified amount of resistance heaters which will produce the required heat.

On a fault condition the main limit located in the supply air or the auxiliary limit located downstream the supply blower will remove power from all contactors.

## 7.7. Gas Heater Operation

When heat (G and W1, W2, etc.) is called for the combustion motor starts and the ignition control is energized. See Gas Heater section for more details.

# 8. MAINTENANCE

(See back of the manual for maintenance log.)

At least once each year, a qualified service technician must check out the unit. Inspect supply fans, evaporator coils and air filters monthly.

**WARNING**

Improper installation, adjustment, alteration, service or maintenance can cause property damage, personal injury or loss of life. Installation and service must be performed by a qualified installer. A copy of this IOM must be kept with the unit.

Periodically during operation, it is necessary to perform routine service checks on the performance of the unit. This includes checking the air flow, air filters, condenser water flow, and refrigerant charge.

See Startup section for information on air flow adjustment and refrigerant charge adjustment.

## 8.1. DX Cooling

Set unit controls to cooling mode of operation with supply fans on. Check the fans for correct operating direction, amperage and voltage.

## 8.2. Condensate Drain Pans

Drain pans will have moisture present and require periodic cleaning to prevent microbial growth. Cleaning of the drain pans will also prevent any possible plugging of the drain lines and overflow of the pan itself. Cleaning of the drain pans and inside of the unit must be done only by qualified personnel.

## 8.3. Winterizing Coils

In some cases it may be necessary to winterize water coils to prevent them from freezing.

First completely drain the coils. There is a drain located below the 'water in' connection and a vent connection located above the 'water out' connection. Auxiliary drain piping can also be added to exterior water piping if yearly winterizing is necessary.

After the coil is drained, fill with an antifreeze solution using a circulating pump. Then thoroughly drain.

## 8.4. Supply Fans

**CAUTION**

Blower wheels must be inspected for excessive dust build up periodically and cleaned if required. Excessive dust build up on blower wheels may cause an unbalanced state; leading to vibration and/or component failure. Damages due to excessive dust build up will not be covered under factory warranty.

**WARNING**

Electric shock hazard. Shut off all electrical power to the unit to avoid shock hazard or injury from rotating parts.

## 8.5. E-Coated Coil Cleaning

Documented routine cleaning of e-coated coils is required to maintain coating warranty coverage for fin and tube and microchannel coils. See the AAON E Coated Coil Maintenance Record sheet.

**WARNING**

Electric shock hazard. Shut off all electrical power to the unit to avoid shock hazard or injury from rotating parts.

Surface loaded fibers or dirt must be removed prior to water rinse to prevent restriction of airflow. If unable to back wash the side of the coil opposite of the coils entering air side, then surface loaded fibers or dirt must be removed with a vacuum cleaner. If a vacuum cleaner is not available, a soft non-metallic bristle brush may be used. In either case, the tool must be applied in the direction of the fins. Coil surfaces can be easily damaged (fin edges bent over) if the tool is applied across the fins.

Use of a water stream, such as a garden hose, against a surface loaded coil will drive the fibers and dirt into the coil. This will make cleaning efforts more difficult. Surface loaded fibers must be completely removed prior to using low velocity clean water rinse.

A monthly clean water rinse is recommended for coils that are applied in coastal or industrial environments to help to remove chlorides, dirt, and debris. It is very important when rinsing, that water temperature is less than 54.4°C (130°F) and pressure is less than 689.5 kpa (100 psig) to avoid damaging the fin edges. An elevated water temperature (not to exceed 54.4°C [130°F]) will reduce surface tension, increasing the ability to remove chlorides and dirt.

**CAUTION**

High velocity water from a pressure washer or compressed air should only be used at a very low pressure to prevent fin and/or coil damages. The force of the water or air jet may bend the fin edges and increase airside pressure drop. Reduced unit performance or nuisance unit shutdowns may occur.

**CAUTION**

Harsh chemicals, household bleach, or acid cleaners should not be used to clean outdoor or indoor e-coated coils. These cleaners can be very difficult to rinse out of the coil and can accelerate corrosion and attack the E-coating. If there is dirt below the surface of the coil, use the recommended coil cleaners.

For routine quarterly cleaning, first clean the coil with the below approved coil cleaner. After cleaning the coils with the approved cleaning agent, use the approved chloride remover to remove soluble salts and revitalize the unit.

### 8.5.1. Recommended Coil Cleaner

The following cleaning agent, when used in accordance with the manufacturer's directions, has been approved for use on e-coated coils to remove mold, mildew, dust, soot, greasy residue, lint, and other particulate:

- Enviro-Coil Cleaner: AAON PN: V82540
- GulfClean ™ Coil Cleaner ; AAON PN: G074480

### 8.5.2. Recommended Chloride Remover

GulfClean Salt Reducer™; AAON PN: G074490

GulfClean Salt Reducer™ is used to remove soluble salts from the e-coated coil, follow the manufacturer's instructions. This product is not intended for use as a degreaser. Any grease or oil film must first be removed with GulfClean ™ Coil Cleaner.

Remove Barrier - First ensure the power to the unit is off and locked out. Clean the area around the unit if needed to ensure leaves, grass or loose debris will not be blown into the coil. Soluble salts adhere themselves to the substrate. For the effective use of this product, the product must be able to come in contact with the salts. These salts may be beneath any soils, grease or dirt; therefore, these barriers must be removed prior to application of this product. As in all surface preparation, the best work yields the best results.

Application - Apply GulfClean ™ Coil Cleaner directly onto the substrate. Sufficient product must be applied uniformly across the substrate to thoroughly wet out surface, with no areas missed. This may be accomplished by use of a pump-up sprayer or conventional spray gun. Apply the cleaner to unit interior air exiting side coil surfaces first. Work in sections/panels moving side to side and from top to bottom. Allow the cleaning solution to soak for 5 to 10 minutes. Then move on to the exterior using the same method.

Rinse - Using pressurized potable water such as a garden hose, (< 689.5 kpa [100 psi]), rinse the coils and continue to always work in sections/panels.

Continue until all coil areas on the inside of the unit have been rinsed. Note: Coils must always be cleaned / back flushed, opposite of airflow to prevent impacting the dirt into the coil.

Repeat these steps with GulfClean ™ Salt Reducer. When finished replace all panels and tops that were removed.

## 8.6. Refrigerant Removal and Evacuation

If removal of refrigerant is required for any maintenance or servicing, conventional procedures must be used and removal of refrigerant must be in accordance with local and national regulations.

Safety precautions must be taken prior to beginning work to ensure that the risk of fire due to flammable refrigerants is minimized. Work is to be undertaken under a controlled procedure to reduce the amount of refrigerant vapor present while work is being performed. All maintenance staff and others working in the area are to be instructed on the nature of work being performed. Care should be taken to ensure that working in a confined space is avoided.

Check area with a refrigerant detector suitable for use with the refrigerant prior to and during work in order to be aware of potential flammable environment. Keep a dry powder or CO2 fire extinguisher nearby if any hot work is being performed.

Ensure that work area is sufficiently ventilated before breaking into the system. Ventilation must continue throughout all of the work. Ensure that ventilation safely removes flammable refrigerant to an area that will adequately disperse refrigerant to avoid concentration above flammable levels.

**WARNING**

Prior to performing work that can result in release of a flammable refrigerant, inspect area to ensure it is free of any potential ignition sources. “No Smoking” signs are to be displayed while performing work.

Refrigerant must be recovered into the correct recovery cylinders in accordance with local and national regulations. Recovery cylinders must be labeled properly. Ensure that the correct number of cylinders are available for holding the entire charge of the system. Cylinders must have pressure relief and shut-off valves that are in proper working order. Fully evacuate a recovery cylinder before use.

The recovery equipment must be in good working order with a set of instructions concerning the equipment that is at hand. Ensure that equipment is suitable for the recovery of flammable refrigerant used. If in doubt, the manufacturer should be consulted. In addition, a set of calibrated weighing scales must be available and in good working order. Ensure hoses are complete with leak-free disconnect couplings and in good condition.

When removing refrigerant to open the system, evacuate the system and flush or purge the system continuously with an inert gas when using a flame to open the circuit.

The system must be purged with oxygen-free nitrogen to render the appliance safe for flammable refrigerant. Compressed air or oxygen must not be used. When pulling a vacuum, ensure that the outlet of the vacuum pump is not near any potential ignition source and in a well ventilated area.

The recovered refrigerant is to be processed according to local legislation in the correct recovery cylinder, and the relevant waste transfer note arranged.

Do not mix refrigerants in recovery units and especially not in cylinders.

If compressors or compressor oils are to be removed, ensure that they have been evacuated to an acceptable level to make certain that flammable refrigerant does not remain within the lubricant. Do not heat the compressor body by using an open flame or other ignition sources to accelerate this process. Remove any drained oil safely.

# 9. OPTIONS

## 9.1. Heating Coils

One, two, or four row hot water and one or two row steam heating and preheating coils can be factory installed. These coils are supplied from a building hot water source. All valve controls for heating coil operation are field supplied and field installed. Hot water and steam coil connections are spun copper tube.

Connect the steam heating supply to the top of the coil and the return to the bottom.

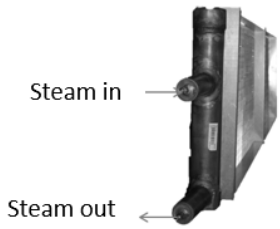


Figure 29: Steam Distributing Piping

Table 11: Steam Distributing Coil Sweat Connection Sizes

| Model (H3/V3-) | Supply and Return Connection Size (OD) | |
|---|---|---|
| A–E | 5.4 cm | 2 1/8" |

Air handling units with steam heating coils **MUST BE** installed high enough to allow for a minimum of 0.31 meters (1 foot) condensate drop leg off of the steam coil, or as recommended by the steam trap manufacturer. Lines must be insulated with approved insulation and be properly fastened, sloped, and supported according to local code requirements.

Table 12: Hot Water Coil Sweat Connection Sizes

| Model (H3/V3-) | Supply and Return Connection Size (OD) | |
|---|---|---|
| A | 2.2 cm | 7/8" |
| B | 2.9 cm | 1 1/8" |
| C | 3.5 cm | 1 3/8" |
| D & E | 4.1 cm | 1 5/8" |

Connect the hot water heating supply to the bottom of the coil and return to the top.

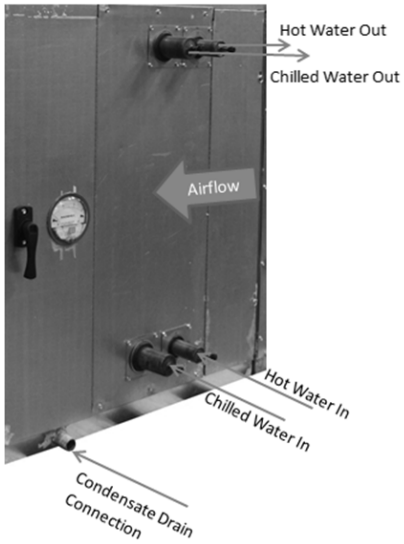


Figure 30: Hot & Chilled Water Piping

Do not subject water coils to entering air temperatures below 3.3°C (38°F) to prevent coil freeze-up. If air temperature across the coil is going to be below this value, use a glycol solution to match the coldest air expected.

Water supply lines must be insulated, properly fastened, drained, and supported according to local code requirements.

## 9.2. Chilled Water Coil

Factory installed four, six or eight row chilled water-cooling coils can be factory mounted. These coils are supplied from a building chilled water source. All valve controls for the cooling coil operation are field supplied and field installed.

Table 13: Chilled Water Coil Sweat Connection Sizes

| Model (H3/V3-) | Supply and Return Connection Size (OD) | |
|---|---|---|
| A | 2.9 cm | 1 1/8" |
| B | 3.5 cm | 1 3/8" |
| C | 4.1 cm | 1 5/8" |
| D & E | 5.4 cm | 2 1/8" |

Connect the chilled water supply to the bottom of the coil and return to the top.

Water supply lines must be insulated with closed cell type pipe insulation or insulation that includes a vapor barrier. Lines must be properly fastened, drained and supported according to local code requirements, and job specifications.

Table 14: Minimum and Maximum Coil Pressures and Temperatures

| | Chilled Water | Hot Water |
|---|---|---|
| Min. Entering Air | 1.7°C (35°F)[1] | 1.7 °C (35°F)[1] |
| Max Entering Air | 48.9°C (120°F)[2] | 48.9°C (120°F)[2] |
| Min. Entering Water | 1.7°C (35°F)[1] [3] | 60°C (120°F)[3] |
| Max Entering Water | 18.3°C (65°F)[3] | 93.3°C (200°F)[3] |
| Min. Water Pressure | 103 kpa (15 psig) | |
| Max Water Pressure | 2068kpa (300 psig) | |

**Notes:**

[1] 1.7°C (3°F) above the freezing temperature of the fluid

[2] higher entering air temperatures may cause supply fans to overheat

[3] More extreme temperatures may be used, but performance might not be accurate

**WARNING**

Prior to performing work that can result in release of a flammable refrigerant, inspect area to ensure it is free of any potential ignition sources. “No Smoking” signs are to be displayed while performing work.

**CAUTION**

Ensure water piping entries into the unit are properly sealed. Failure to seal the entries may result in damage to the unit and property.

**CAUTION**

*Crankcase Heater Operation*

Some units are equipped with compressor crankcase heaters, which must be energized at least 24 hours prior to cooling operation, to clear any liquid refrigerant from the compressors.

## 9.3. Direct Expansion (DX) Systems

All DX refrigerant coils are factory charged with a nitrogen holding charge. All DX systems include evaporator coils and thermal expansion valves (TXV).

Always control the unit from the thermostat, or control panel, never at the main power supply, except for emergency or complete shutdown of the unit.

During the cooling season, if the air flow is reduced due to dirty air filters or any other reason, the cooling coils can get too cold which will cause excessive liquid to return to the compressor. As the liquid concentration builds up, oil is washed out of the compressor, leaving it starved for lubrication.

## 9.4. Evaporator Coil

The air handling unit coils are pressurized. The copper caps must be punctured to permit a gradual escape of the pressure prior to un-sweating those caps. Immediately couple the tubing to the indoor unit to avoid exposing the coils to moisture. While making solder connections, make sure dry nitrogen flows through the lines, when heating the copper, to prevent oxidization inside of the copper. Field piping between the condensing unit and the air handler is required. Line sizes must be selected to meet actual installation conditions, not simply based on the connection sizes.

**CAUTION**

*Refrigerant Piping*

Line sizes must be selected to meet actual installation conditions, not simply based on the connection sizes at the condensing unit or air handling unit.

## 9.5. Thermal Expansion Valve

Thermal expansion valve bulbs must be mounted with good thermal contact on a horizontal section of the suction line close to the evaporator, but outside the cabinet, and well insulated. On suction lines less than or equal to 22.2 mm (7/8") OD, mount in the 12 o'clock position. On suction lines greater than 22.2 mm (7/8") OD, mount in either the 4 o'clock or 8 o'clock position.

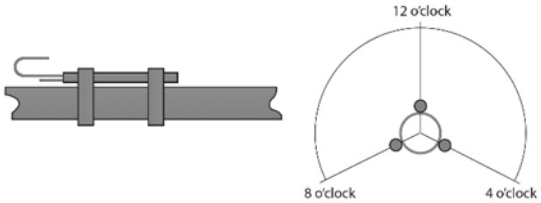


Figure 31: TXV Bulb Position

## 9.6. Hot Gas Reheat

Hot Gas Reheat (HGRH) is available for use with DX systems that need humidity control. The AAON modulating hot gas reheat system diverts hot discharge gas from the condenser to the air handling unit through the hot gas line. Field piping between the condensing unit and the air handler is required. Line sizes must be selected to meet actual installation conditions, not simply based on the connection sizes.

The line delivers the hot discharge gas to the reheat coil and/or the hot gas bypass valve, so it is sized as a discharge line.

## 9.7. Hot Gas Bypass

Hot Gas Bypass is available for use with DX systems that may experience low suction pressure during the operating cycle. This may be due to varying load conditions associated with VAV applications or units supplying a large percentage of outside air. Hot Gas Bypass is not necessary in units with variable capacity compressors. The system is designed to divert refrigerant from the compressor discharge to the low pressure side of the system in order to keep the evaporator from freezing and to maintain adequate refrigerant velocity for oil return at minimum load.

Hot discharge gas is redirected to the evaporator inlet via an auxiliary side connector (ASC) to false load the evaporator when reduced suction pressure is sensed. Field piping between the condensing unit and the evaporator is required. Line sizes must be selected to meet actual installation conditions, not simply based on the connection sizes.

Table 15: Minimum Circulation Airflow and Room Area for a Given Charge

| Charge of Largest Circuit in kg (oz) | | Min Circulation Airflow in m3/hr (CFM) | | Minimum Room Area in m2 (ft2) | | | | | |
|---|---|---|---|---|---|---|---|---|---|
| | | | | 1.8 m (6 ft) ceiling/release height | | 3 m (10 ft) ceiling/release height | | 3.7 m (12 ft) ceiling/release height | |
| **1.4** | 50 | **144** | 85 | **5** | 57 | **3** | 34 | **3** | 28 |
| **1.9** | 66 | **190** | 112 | **7** | 76 | **4** | 45 | **3** | 37 |
| **2.3** | 82 | **236** | 139 | **9** | 94 | **5** | 56 | **4** | 46 |
| **2.8** | 98 | **282** | 166 | **10** | 112 | **6** | 67 | **5** | 55 |
| **3.2** | 114 | **328** | 193 | **12** | 131 | **7** | 78 | **6** | 64 |
| **3.7** | 130 | **374** | 220 | **14** | 149 | **8** | 89 | **7** | 72 |
| **4.1** | 146 | **419** | 247 | **16** | 167 | **9** | 100 | **8** | 81 |
| **4.6** | 162 | **465** | 274 | **17** | 186 | **10** | 111 | **8** | 90 |
| **5.0** | 178 | **511** | 301 | **19** | 204 | **11** | 122 | **9** | 99 |
| **5.5** | 194 | **557** | 328 | **21** | 222 | **12** | 133 | **10** | 108 |
| **6.0** | 210 | **603** | 355 | **22** | 241 | **13** | 144 | **11** | 117 |
| **6.4** | 226 | **649** | 382 | **24** | 259 | **14** | 155 | **12** | 126 |
| **6.9** | 242 | **695** | 409 | **26** | 277 | **15** | 166 | **13** | 135 |
| **7.3** | 258 | **741** | 436 | **27** | 296 | **16** | 177 | **13** | 144 |
| **7.8** | 274 | **787** | 463 | **29** | 314 | **17** | 188 | **14** | 153 |
| **8.2** | 290 | **833** | 490 | **31** | 332 | **19** | 199 | **15** | 162 |
| **8.7** | 306 | **879** | 517 | **33** | 351 | **20** | 210 | **16** | 171 |
| **9.2** | 326 | **937** | 551 | **35** | 373 | **21** | 224 | **17** | 182 |
| **9.6** | 340 | **977** | 575 | **36** | 389 | **22** | 234 | **18** | 189 |
| **10.2** | 360 | **1034** | 609 | **38** | 412 | **23** | 247 | **19** | 201 |
| **10.8** | 380 | **1092** | 643 | **40** | 435 | **24** | 261 | **20** | 212 |
| **11.3** | 400 | **1149** | 676 | **43** | 458 | **26** | 275 | **21** | 223 |
| **12.0** | 424 | **1218** | 717 | **45** | 486 | **27** | 291 | **22** | 236 |
| **12.7** | 448 | **1287** | 758 | **48** | 513 | **29** | 308 | **23** | 250 |
| **13.4** | 472 | **1356** | 798 | **50** | 541 | **30** | 324 | **24** | 263 |
| **14.1** | 496 | **1425** | 839 | **53** | 568 | **32** | 341 | **26** | 276 |
| **14.7** | 520 | **1494** | 879 | **55** | 596 | **33** | 357 | **27** | 290 |
| **15.4** | 544 | **1563** | 920 | **58** | 623 | **35** | 374 | **28** | 303 |
| **16.3** | 576 | **1655** | 974 | **61** | 660 | **37** | 396 | **30** | 321 |
| **17.2** | 608 | **1747** | 1028 | **65** | 696 | **39** | 418 | **31** | 339 |
| **18.1** | 640 | **1839** | 1082 | **68** | 733 | **41** | 440 | **33** | 357 |
| **19.1** | 672 | **1931** | 1136 | **72** | 770 | **43** | 462 | **35** | 374 |
| **20.0** | 704 | **2023** | 1191 | **75** | 806 | **45** | 484 | **36** | 392 |
| **20.9** | 736 | **2115** | 1245 | **78** | 843 | **47** | 506 | **38** | 410 |
| **21.8** | 768 | **2207** | 1299 | **82** | 880 | **49** | 528 | **40** | 428 |

Table 16: Minimum Circulation Airflow and Room Area for a Given Charge (continued)

| Charge of Largest Circuit in kg (oz) | | Min Circulation Airflow in m3/hr (CFM) | | Minimum Room Area in m2 (ft2) | | | | | |
|---|---|---|---|---|---|---|---|---|---|
| | | | | 1.8 m (6 ft) ceiling/release height | | 3 m (10 ft) ceiling/release height | | 3.7 m (12 ft) ceiling/release height | |
| **22.7** | 800 | **2299** | 1353 | **85** | 916 | **51** | 550 | **41** | 446 |
| **23.6** | 832 | **2391** | 1407 | **89** | 953 | **53** | 572 | **43** | 464 |
| **24.5** | 864 | **2482** | 1461 | **92** | 990 | **55** | 594 | **45** | 481 |
| **25.4** | 896 | **2574** | 1515 | **95** | 1026 | **57** | 616 | **46** | 499 |
| **26.3** | 928 | **2666** | 1569 | **99** | 1063 | **59** | 638 | **48** | 517 |
| **27.2** | 960 | **2758** | 1623 | **102** | 1100 | **61** | 660 | **50** | 535 |
| **28.1** | 992 | **2850** | 1678 | **106** | 1136 | **63** | 682 | **51** | 553 |
| **28.6** | 1010 | **2902** | 1708 | **107** | 1157 | **64** | 694 | **52** | 563 |
| **30.1** | 1060 | **3046** | 1793 | **113** | 1214 | **68** | 729 | **55** | 591 |
| **31.5** | 1110 | **3189** | 1877 | **118** | 1271 | **71** | 763 | **57** | 619 |
| **32.9** | 1160 | **3333** | 1962 | **123** | 1329 | **74** | 797 | **60** | 646 |
| **34.3** | 1210 | **3477** | 2046 | **129** | 1386 | **77** | 832 | **63** | 674 |
| **35.7** | 1260 | **3620** | 2131 | **134** | 1443 | **80** | 866 | **65** | 702 |
| **37.1** | 1310 | **3764** | 2215 | **139** | 1501 | **84** | 900 | **68** | 730 |
| **38.6** | 1360 | **3908** | 2300 | **145** | 1558 | **87** | 935 | **70** | 758 |
| **40.0** | 1410 | **4051** | 2385 | **150** | 1615 | **90** | 969 | **73** | 786 |
| **41.4** | 1460 | **4195** | 2469 | **155** | 1672 | **93** | 1003 | **76** | 814 |
| **42.8** | 1510 | **4339** | 2554 | **161** | 1730 | **96** | 1038 | **78** | 841 |
| **44.2** | 1560 | **4482** | 2638 | **166** | 1787 | **100** | 1072 | **81** | 869 |
| **45.6** | 1610 | **4626** | 2723 | **171** | 1844 | **103** | 1107 | **83** | 897 |
| **47.1** | 1660 | **4770** | 2807 | **177** | 1901 | **106** | 1141 | **86** | 925 |
| **48.5** | 1710 | **4913** | 2892 | **182** | 1959 | **109** | 1175 | **89** | 953 |
| **49.9** | 1760 | **5057** | 2976 | **187** | 2016 | **112** | 1210 | **91** | 981 |
| **51.3** | 1810 | **5201** | 3061 | **193** | 2073 | **116** | 1244 | **94** | 1009 |
| **52.7** | 1860 | **5344** | 3146 | **198** | 2131 | **119** | 1278 | **96** | 1036 |
| **54.1** | 1910 | **5488** | 3230 | **203** | 2188 | **122** | 1313 | **99** | 1064 |
| **55.6** | 1960 | **5632** | 3315 | **209** | 2245 | **125** | 1347 | **101** | 1092 |
| **57.0** | 2010 | **5775** | 3399 | **214** | 2302 | **128** | 1381 | **104** | 1120 |
| **59.5** | 2100 | **6034** | 3551 | **223** | 2405 | **134** | 1443 | **109** | 1170 |
| **62.4** | 2200 | **6321** | 3721 | **234** | 2520 | **140** | 1512 | **114** | 1226 |
| **65.2** | 2300 | **6608** | 3890 | **245** | 2635 | **147** | 1581 | **119** | 1282 |
| **68.0** | 2400 | **6896** | 4059 | **255** | 2749 | **153** | 1649 | **124** | 1337 |
| **70.9** | 2500 | **7183** | 4228 | **266** | 2864 | **160** | 1718 | **129** | 1393 |
| **73.7** | 2600 | **7470** | 4397 | **277** | 2978 | **166** | 1787 | **135** | 1449 |
| **76.5** | 2700 | **7758** | 4566 | **287** | 3093 | **172** | 1856 | **140** | 1505 |
| **79.4** | 2800 | **8045** | 4735 | **298** | 3207 | **179** | 1924 | **145** | 1560 |

Table 17: Minimum Airflow for Non-Ducted Applications by Box Size

| Box Size | Maximum Charge of any Single Circuit in kg (oz) | | Minimum Airflow for Non-Ducted Applications in $m^3$/hr (CFM) | |
|---|---|---|---|---|
| A | **20.1** | 706 | **705** | 415 |
| B | **36.9** | 1300 | **1201** | 707 |
| C | **70.9** | 2500 | **2241** | 1319 |
| D | **79.4** | 2800 | **3264** | 1921 |
| E | **79.4** | 2800 | **4815** | 2834 |

Table 18: R-454B Refrigerant Temperature-Pressure Chart (Metric)

| °C | KPA | °C | KPA | °C | KPA | °C | KPA | °C | KPA |
|---|---|---|---|---|---|---|---|---|---|
| **-6.7** | 484.5 | **8.3** | 843.3 | **23.3** | 1348.0 | **38.3** | 2034.6 | **53.3** | 2946.9 |
| **-6.1** | 495.6 | **8.9** | 859.3 | **23.9** | 1370.0 | **38.9** | 2064.1 | **53.9** | 2985.7 |
| **-5.6** | 506.9 | **9.4** | 875.3 | **24.4** | 1392.2 | **39.4** | 2093.9 | **54.4** | 3024.9 |
| **-5.0** | 518.2 | **10.0** | 891.6 | **25.0** | 1414.6 | **40.0** | 2123.9 | **55.0** | 3064.5 |
| **-4.4** | 529.7 | **10.6** | 908.1 | **25.6** | 1437.3 | **40.6** | 2154.3 | **55.6** | 3104.5 |
| **-3.9** | 541.5 | **11.1** | 924.8 | **26.1** | 1460.3 | **41.1** | 2185.0 | **56.1** | 3144.9 |
| **-3.3** | 553.3 | **11.7** | 941.7 | **26.7** | 1483.5 | **41.7** | 2216.1 | **56.7** | 3185.8 |
| **-2.8** | 565.4 | **12.2** | 958.8 | **27.2** | 1507.0 | **42.2** | 2247.4 | **57.2** | 3227.0 |
| **-2.2** | 577.6 | **12.8** | 976.2 | **27.8** | 1530.8 | **42.8** | 2279.1 | **57.8** | 3268.6 |
| **-1.7** | 589.9 | **13.3** | 993.7 | **28.3** | 1554.8 | **43.3** | 2311.1 | **58.3** | 3310.7 |
| **-1.1** | 602.5 | **13.9** | 1011.5 | **28.9** | 1579.0 | **43.9** | 2343.5 | **58.9** | 3353.2 |
| **-0.6** | 615.2 | **14.4** | 1029.4 | **29.4** | 1603.6 | **44.4** | 2376.2 | **59.4** | 3396.1 |
| **0.0** | 628.1 | **15.0** | 1047.6 | **30.0** | 1628.4 | **45.0** | 2409.2 | **60.0** | 3439.5 |
| **0.6** | 641.2 | **15.6** | 1066.0 | **30.6** | 1653.5 | **45.6** | 2442.6 | **60.6** | 3483.3 |
| **1.1** | 654.4 | **16.1** | 1084.7 | **31.1** | 1678.8 | **46.1** | 2476.2 | **61.1** | 3527.6 |
| **1.7** | 667.8 | **16.7** | 1103.5 | **31.7** | 1704.4 | **46.7** | 2510.3 | **61.7** | 3572.3 |
| **2.2** | 681.4 | **17.2** | 1122.6 | **32.2** | 1730.4 | **47.2** | 2544.7 | **62.2** | 3617.4 |
| **2.8** | 695.2 | **17.8** | 1141.9 | **32.8** | 1756.6 | **47.8** | 2579.4 | **62.8** | 3663.0 |
| **3.3** | 709.2 | **18.3** | 1161.5 | **33.3** | 1783.0 | **48.3** | 2614.5 | **63.3** | 3709.2 |
| **3.9** | 723.3 | **18.9** | 1181.3 | **33.9** | 1809.9 | **48.9** | 2650.0 | **63.9** | 3755.7 |
| **4.4** | 737.6 | **19.4** | 1201.3 | **34.4** | 1836.9 | **49.4** | 2685.7 | **64.4** | 3802.7 |
| **5.0** | 752.2 | **20.0** | 1221.5 | **35.0** | 1864.3 | **50.0** | 2721.9 | **65.0** | 3850.3 |
| **5.6** | 766.9 | **20.6** | 1242.0 | **35.6** | 1891.9 | **50.6** | 2758.5 | **65.6** | 3898.4 |
| **6.1** | 781.8 | **21.1** | 1262.8 | **36.1** | 1919.8 | **51.1** | 2795.4 | | |
| **6.7** | 796.9 | **21.7** | 1283.7 | **36.7** | 1948.1 | **51.7** | 2832.7 | | |
| **7.2** | 812.2 | **22.2** | 1304.9 | **37.2** | 1976.7 | **52.2** | 2870.4 | | |
| **7.8** | 827.7 | **22.8** | 1326.3 | **37.8** | 2005.5 | **52.8** | 2908.4 | | |

Table 19: R-454B Refrigerant Temperature-Pressure Chart (Imperial)

| °F | PSIG | °F | PSIG | °F | PSIG | °F | PSIG | °F | PSIG |
|---|---|---|---|---|---|---|---|---|---|
| **20** | 70.3 | **47** | 122.3 | **74** | 195.5 | **101** | 295.1 | **128** | 427.4 |
| **21** | 71.9 | **48** | 124.6 | **75** | 198.7 | **102** | 299.4 | **129** | 433.0 |
| **22** | 73.5 | **49** | 127.0 | **76** | 201.9 | **103** | 303.7 | **130** | 438.7 |
| **23** | 75.2 | **50** | 129.3 | **77** | 205.2 | **104** | 308.0 | **131** | 444.5 |
| **24** | 76.8 | **51** | 131.7 | **78** | 208.5 | **105** | 312.5 | **132** | 450.3 |
| **25** | 78.5 | **52** | 134.1 | **79** | 211.8 | **106** | 316.9 | **133** | 456.1 |
| **26** | 80.3 | **53** | 136.6 | **80** | 215.2 | **107** | 321.4 | **134** | 462.0 |
| **27** | 82.0 | **54** | 139.1 | **81** | 218.6 | **108** | 326.0 | **135** | 468.0 |
| **28** | 83.8 | **55** | 141.6 | **82** | 222.0 | **109** | 330.6 | **136** | 474.1 |
| **29** | 85.6 | **56** | 144.1 | **83** | 225.5 | **110** | 335.2 | **137** | 480.2 |
| **30** | 87.4 | **57** | 146.7 | **84** | 229.0 | **111** | 339.9 | **138** | 486.3 |
| **31** | 89.2 | **58** | 149.3 | **85** | 232.6 | **112** | 344.6 | **139** | 492.6 |
| **32** | 91.1 | **59** | 151.9 | **86** | 236.2 | **113** | 349.4 | **140** | 498.8 |
| **33** | 93.0 | **60** | 154.6 | **87** | 239.8 | **114** | 354.3 | **141** | 505.2 |
| **34** | 94.9 | **61** | 157.3 | **88** | 243.5 | **115** | 359.1 | **142** | 511.6 |
| **35** | 96.9 | **62** | 160.1 | **89** | 247.2 | **116** | 364.1 | **143** | 518.1 |
| **36** | 98.8 | **63** | 162.8 | **90** | 251.0 | **117** | 369.1 | **144** | 524.6 |
| **37** | 100.8 | **64** | 165.6 | **91** | 254.8 | **118** | 374.1 | **145** | 531.3 |
| **38** | 102.9 | **65** | 168.5 | **92** | 258.6 | **119** | 379.2 | **146** | 538.0 |
| **39** | 104.9 | **66** | 171.3 | **93** | 262.5 | **120** | 384.3 | **147** | 544.7 |
| **40** | 107.0 | **67** | 174.2 | **94** | 266.4 | **121** | 389.5 | **148** | 551.5 |
| **41** | 109.1 | **68** | 177.2 | **95** | 270.4 | **122** | 394.8 | **149** | 558.4 |
| **42** | 111.2 | **69** | 180.1 | **96** | 274.4 | **123** | 400.1 | **150** | 565.4 |
| **43** | 113.4 | **70** | 183.1 | **97** | 278.4 | **124** | 405.4 | | |
| **44** | 115.6 | **71** | 186.2 | **98** | 282.5 | **125** | 410.8 | | |
| **45** | 117.8 | **72** | 189.3 | **99** | 286.7 | **126** | 416.3 | | |
| **46** | 120.0 | **73** | 192.4 | **100** | 290.9 | **127** | 421.8 | | |

# 10. ENERGY RECOVERY UNITS

Some H3 & V3 units have been equipped with an energy recovery wheel. This section is provided to assure the energy recovery feature will be properly setup to perform in accordance with the job specifications for your particular application.

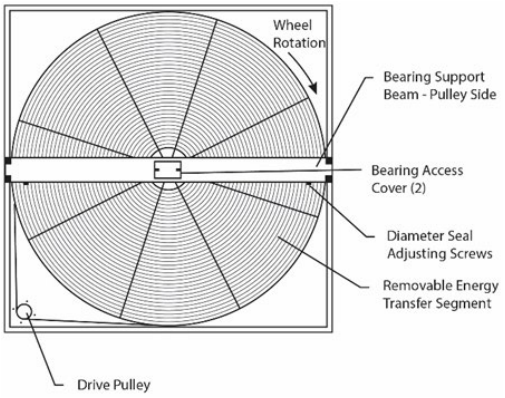


Figure 32: Energy Recovery Wheel

The Energy Recovery Cassette consists of a frame wheel, wheel drive system, and energy transfer segments. Segments are removable for cleaning or replacement. The segments rotate through counter flowing exhaust and outdoor air supply streams where they transfer heat and/or water vapor from the warm, moist air stream to the cooler and/or drier air stream.

The initial setup and servicing of the energy recovery wheel is very important to maintain proper operation efficiency and building occupant comfort.

Normal maintenance requires periodic inspection of filters, the cassette wheel, drive belts, air seals, wheel drive motor, and its electrical connections.

Wiring diagrams are provided with each motor. When wired according to wiring diagram, motor rotates clockwise when viewed from the shaft/pulley side.

By carefully reviewing the information within this section and following the instructions, the risk of improper operation and/or component damage will be minimized.

It is important that periodic maintenance be performed to help assure trouble free operation.

## 10.1. Initial Mechanical Check and Setup

Outdoor air intake adjustments must be made according to building ventilation, or local code requirements.

After the unit installation is complete, open the cassette access door and determine that the energy wheel rotates freely when turned by hand. Apply power and observe that the wheel rotates at approximately 30 RPM. If the wheel does not rotate when power is applied, it may be necessary to readjust the “diameter air seals”.

Handle cassettes with care. Lift all cassettes by the bearing support beam. Holes are provided on both sides of the bearing support beams to facilitate rigging as shown in the following illustration.

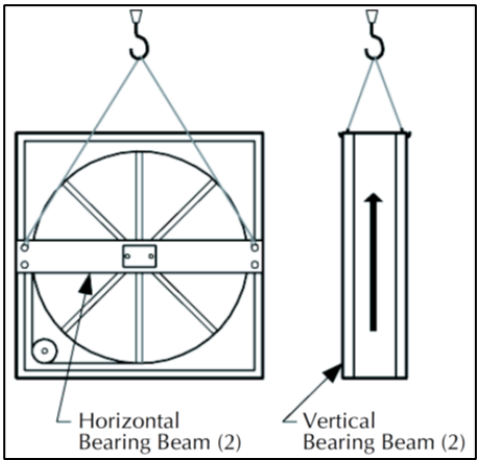


Figure 33: Lifting Hole Locations

## 10.2. Polymer Energy Recovery Wheel

This section is provided to assure the energy recovery feature will be properly setup to perform in accordance with the job specifications for your particular application.

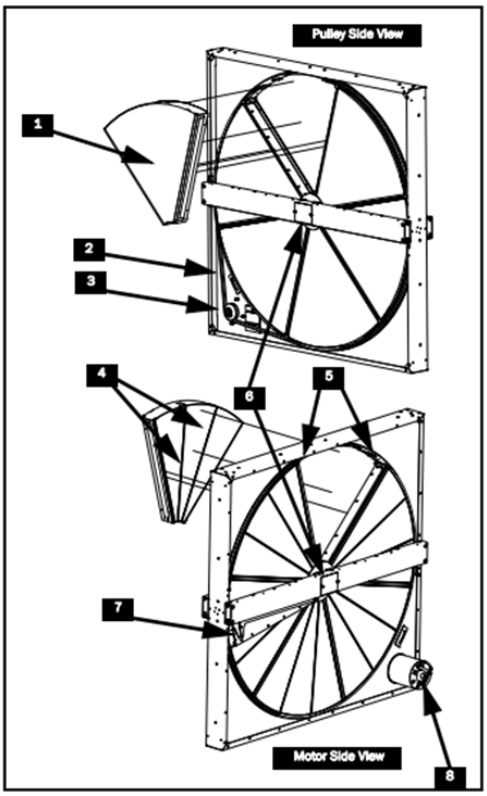


Figure 34: Polymer Energy Recovery Wheel

1. Removable Segment
2. Permanent Tension Belt
3. Pulley
4. Embedded Segment Stiffeners
5. Segment Retaining Latches
6. Bearing Beam and Bearing Access Cover Plate (Diameter Seals are behind Bearing Beam on both sides)
7. Adjustable Purge
8. Motor

*Polymer Wheel Set Purge Angle*

When installed, the purge angle is factory set to 5 degrees. If a different angle is required, complete the following steps to adjust the purge:

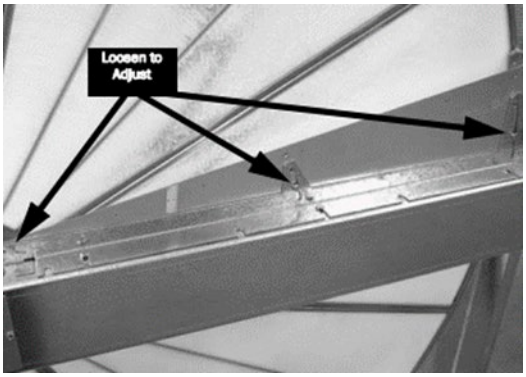


Figure 35: Purge Screws

9. Loosen the three purge adjusting screws.
10. Adjust purge sector to the specified angle.

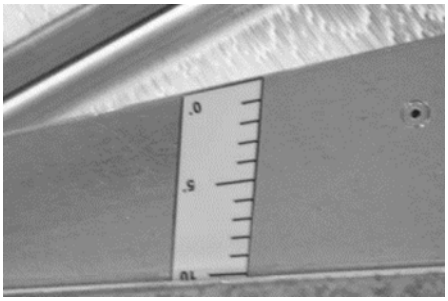

Figure 36: Purge Adjust

11. Tighten the purge adjusting screws.
12. Turn the wheel by hand clockwise (when viewed from pulley side) to check for interference.

*Polymer Wheel Check Purge Seal*

If a purge is installed, check for a slight interference fit between the seal and the face of the wheel by sliding a piece of paper ("feeler gauge") between the seal and the media a multiple locations along the purge seal as you rotate the wheel slowly by hand (clockwise when viewed from the pulley side). Verify that the media slightly grabs the paper during rotation.

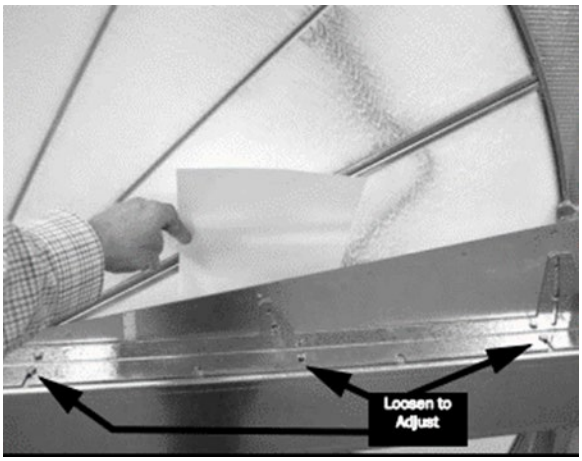


Figure 37: Determine Fit

If it is necessary to adjust a purge seal to the face of the wheel, loosen the two or three screws along the bearing beam and adjust to the proper distance from the media surface. Tighten the screws and retest the seal.

*Polymer Wheel Air Seal Adjustments*

Pile type air seals across both sides of the energy wheel diameter are factory adjusted to provide close clearance between the air seal and wheel.

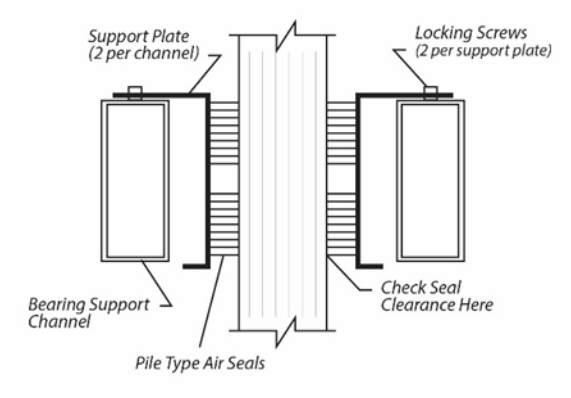


Figure 38: Cross Section of Air Seal Structure

Racking of the unit or cassette during installation, and/or mounting of the unit on a non-level support or in other than the factory orientation can change seal clearances. Tight seals will prevent rotation.

*Polymer Wheel to Air Seal Clearance*

To check wheel to seal clearance; first disconnect power to the unit, in some units the energy recovery wheel assembly can be pulled out from the cabinet to view the air seals. On larger units, the energy recovery wheel may be accessible inside the walk-in cabinet.

A business card or two pieces of paper can be used as a feller gauge, (typically each 1 mm [.004"] thick) by placing it between the face of the wheel and pile seal.

Using the paper, determine if a loose slip fit exist between the pile seal and wheel when the wheel is rotated by hand.

To adjust air seal clearance, loosen all seal plate retaining screws holding the separate seal retaining plates to the bearing support channels and slide the seals plates away from the wheel. Using the paper feeler gauge, readjust and retighten one seal plate at a time to provide slip fit clearance when the wheel is rotated by hand.

Confirm that the wheel rotates freely. Apply power to the unit and confirm rotation. Visually inspect the belt and ensure the belt is tracking near the center of the rim. Verify the wheel speed is approximately 45–50 RPM. Confirm there is no excessive noise such as scraping, brushing, or banging.

Polymer Wheel Orientation & Support

The Energy Recovery Cassette may be mounted in any orientation. However, Care must be taken to make certain that the cassette frame remains flat and the bearing beams are not racked.

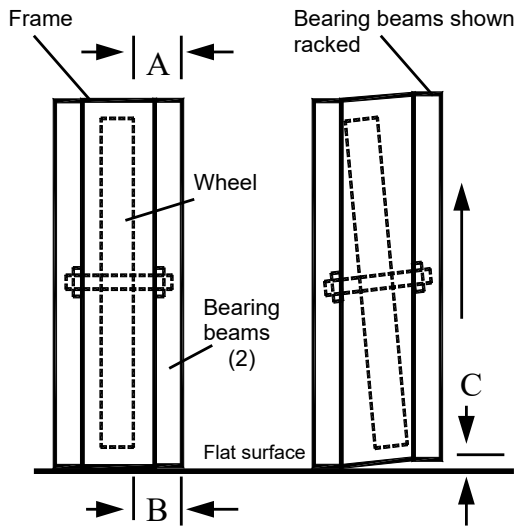


Figure 39: Avoid Racking of Cassette Frame

To verify, make certain that the distance between wheel rim and bearing beam is the same at each end of the bearing beam, to within 6.4 mm (1/4") (dimension A & B). This amount of racking can be compensated for by adjusting the diameter seals.

If greater than 1/4 inch (dimension C), racking must be corrected to ensure that drive belt will not disengage from wheel.

*Polymer Wheel Startup*

Open the access door and determine that the energy recovery wheel rotates freely when turned by hand with no interference noise. Apply power and observe that the wheel rotates. If the wheel does not rotate when power is applied, it may be necessary to readjust the "diameter air seals".

1. By hand, turn wheel clockwise (as viewed from the pulley side), to verify wheel turns freely through 360° rotation.
2. Before applying power to drive motor, confirm wheel segments are fully engaged in wheel frame and segment retainers are completely fastened. (See Segment Installation Diagram).
3. With hands and objects away from moving parts, activate unit and confirm wheel rotation. Wheel rotates clockwise (as viewed from the pulley side).
4. If wheel has difficulty starting, turn power off and inspect for excessive interference between the wheel surface and each of the four (4) diameter seals. To correct, loosen diameter seal adjusting screws and back adjustable diameter seals away from surface of wheel, apply power to confirm wheel is free to rotate, then re-adjust and tighten hub and diameter seals, as shown in hub seal adjustment diagram.
5. Start and stop wheel several times to confirm seal adjustment and to confirm belt is tracking properly on wheel rim (approximately 6.4 mm [1/4"] from outer edge of rim).

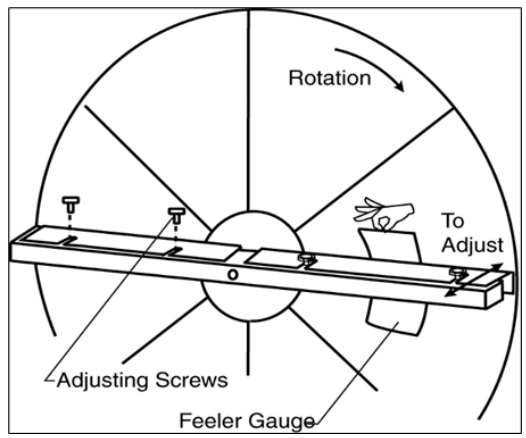


Figure 40: Diameter Seal Adjustment

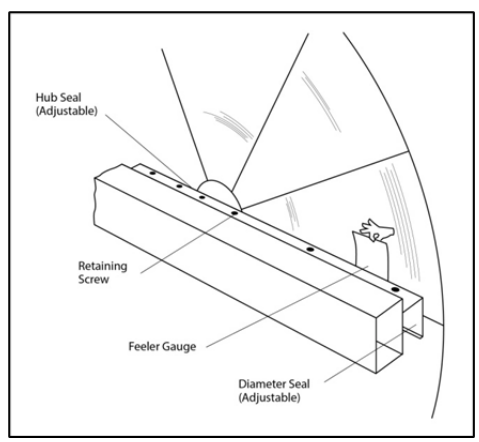


Figure 41: Hub Seal Adjustment

*Controls*

A variety of controls and electrical accessories may be provided with the equipment. Identify the controls on each unit by consulting appropriate submittal, or order documents, and operate according to the control manufacturer's instructions. If you cannot locate installation, operation, or maintenance information for the specific controls, then contact your sales representative, or the control manufacturer for assistance.

**WARNING**

Do not alter factory wiring. Deviation from the supplied wiring diagram will void all warranties, and may result in equipment damage or personal injury. Contact the factory with wiring discrepancies.

*Aluminum Wheel Cleaning*

See general energy recovering cleaning section for how often to clean.

To clean, gain access to the aluminum energy recovery wheel then use the following methods:

- Use a brush or vacuum cleaner to remove small materials.
- Use compressed air at a distance of at least 0.6 m (2 ft) from the wheel. Too much pressure can easily damage the aluminum media.
- First remove the energy recovery wheel from the unit. Then use water at a distance of at least 0.6 m (2 ft) from the wheel. Do not use detergents. Keep temperature below 25°C (77 F). Tightly cover all electric parts and bearings while used pressurized water. Remove excess water before reinstalling the wheel.

*Polymer Energy Recovery Cleaning*

To clean, gain access to the polymer energy recovery wheel, remove the segments, then use the following methods:

- Soak in the solution until grease and tar deposits are loosened (Note: some staining of the desiccant may remain and is not harmful to performance).
- Before removing, rapidly run finger across surface of segment to separate polymer strips for better cleaning action.
- Rinse dirty solution from segment and remove excess water before reinstalling in wheel.

**CAUTION**

Do not use acid based cleaners, aromatic solvents, steam or temperatures in excess of 170°F; damage to the wheel may occur!

*Polymer Wheel Segment Installation & Replacement*

An uneven number of segments in the wheel will cause the wheel to accelerate in rotation. Minimize wheel imbalance and unwanted rotation during service by installing or removing opposing segments for even weight distribution. Failure to maintain control of the wheel rotation while removing or installing all segments could cause severe injury to fingers or hands. Always close and secure segment retaining latches before rotating wheel.

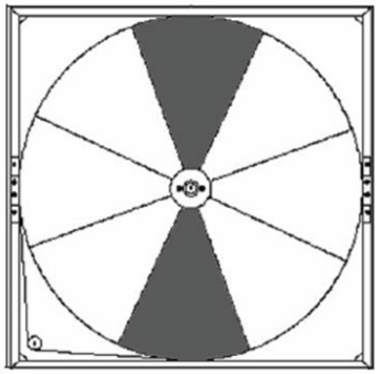

Figure 42: Wheel Segment Removal Pattern

Wheel segments are secured to the wheel frame by a Segment Retainer which pivots on the wheel rim and is held in place by Segment Retaining Latches.

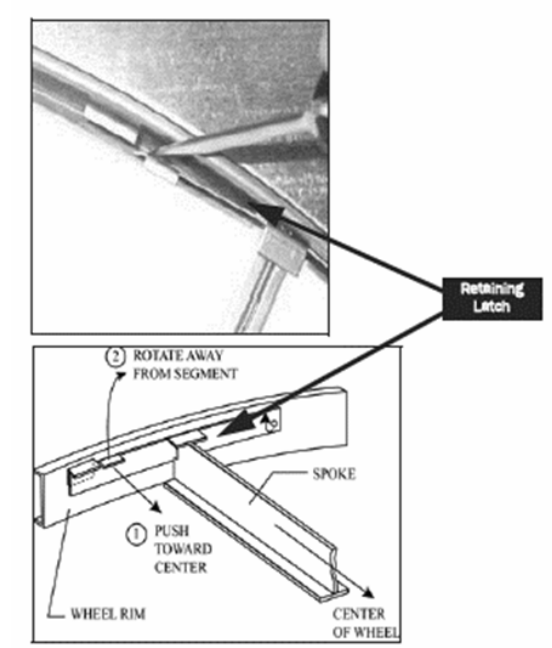


Figure 43: Segment Retainer

To install wheel segments, follow the steps below. Reverse procedure for segment removal.

1. Disconnect power from the wheel.
2. Gain access to the wheel and slide wheel frame out of cabinet.
3. Unlock two segment retainers (one on each side of the selected segment opening.
4. With the embedded stiffener facing the motor side, insert the nose of the segment between the hub plates.

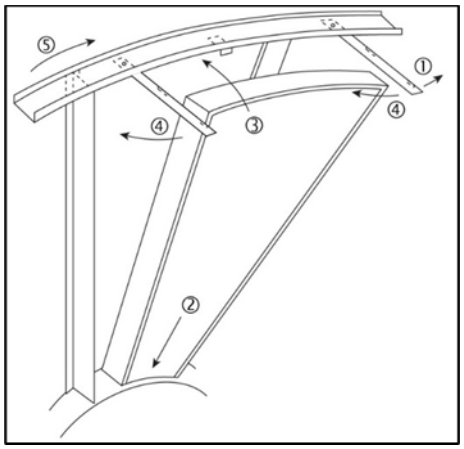


Figure 44: Segment Installation

5. Holding segment by the two outer corners, press the segment towards the center of the wheel and inwards against the spoke flanges. If hand pressure does not fully seat the segment, insert the flat tip of a screwdriver between the wheel rim and outer corners of the segment and apply downward force while guiding the segment into place.
6. Close and latch each Segment Retainer under Segment Retaining Catch.
7. Slowly rotate the wheel 180°. Install the second segment opposite the first for counterbalance. Rotate the two installed segments 90° to balance the wheel while the third segment is installed. Rotate the wheel 180° again to install the fourth segment opposite the third. Repeat this sequence with the remaining four segments.

*Polymer Wheel Air Seals*

Four adjustable diameter seals are provided on each cassette to minimize transfer of air between the counter flowing airstreams.

To adjust diameter seals, loosen diameter seal adjusting screws and back seals away from wheel surface. Rotate wheel clockwise until two opposing spokes are hidden behind the bearing support beam. Using a folded piece of paper as a feeler gauge, position paper between the wheel surface and diameter seals.

Adjust seals towards wheel surface until a slight friction on the feeler gauge (paper) is detected when gauge is moved along the length of the spoke. Retighten adjusting screws and recheck clearance with "feeler" gauge.

*Polymer Wheel Drive Components*

The wheel drive motor bearings are pre-lubricated and no further lubrication is necessary.

The wheel drive pulley is secured to the drive motor shaft by a combination of either a key or D slot and set screw.

The set screw is secured with removable locktite to prevent loosening. Annually confirm set screw is secure. The wheel drive belt is a urethane stretch belt designed to provide constant tension through the life of the belt. No adjustment is required. Inspect the drive belt annually for proper tracking and tension. A properly tensioned belt will turn the wheel immediately after power is applied with no visible slippage during start-up.

*Polymer Wheel Drive Motor and Pulley Replacement*

1. Disconnect power to wheel drive motor.
2. Remove belt from pulley and position temporarily around wheel rim.
3. Loosen set screw in wheel drive pulley using a hex head wrench and remove pulley from motor drive shaft.
4. While supporting weight of drive motor in one hand, loosen and remove (4) mounting bolts.
5. Install replacement motor with hardware kit supplied.
6. Install pulley to dimension as shown and secure set screw to drive shaft.
7. Stretch belt over pulley and engage in groove.
8. Follow start-up procedure.

*Polymer Wheel Belt Replacement*

1. Obtain access to the pulley side bearing access plate if bearing access plates are provided. Remove two bearing access plate retaining screws and the access plate.
2. Using hexagonal wrench, loosen set screw in bearing locking collar. Using light hammer and drift (in drift pin hole) tap collar in the direction of wheel rotation to unlock collar. Remove collar.
3. Using socket wrench with extension, remove two nuts which secure bearing housing to the bearing support beam. Slide bearing from shaft. If not removable by hand, use bearing puller.
4. Form a small loop of belt and pass it through the hole in the bearing support beam. Grasp the belt at the wheel hub and pull the entire belt down.

**Note:** Slight hand pressure against wheel rim will lift weight of wheel from inner race of bearing to assist bearing removal and installation.

**CAUTION**

Protect hands and belt from possible sharp edges of hole in Bearing Support Beam.

5. Loop the trailing end of the belt over the shaft (belt is partially through the opening).
6. Reinstall the bearing onto the wheel shaft, being careful to engage the two locating pins into the holes in the bearing support beam. Secure the bearing with two self-locking nuts.
7. Install the belts around the wheel and pulley according to the instructions provided with the belt.
8. Reinstall diameter seals or hub seal and tighten retaining screws. Rotate wheel in clockwise direction to determine that wheel rotates freely with slight drag on seals.
9. Reinstall bearing locking collar. Rotate collar by hand in the direction the wheel rotates (see label provided on each cassette for wheel rotation).
10. Lock in position by tapping drift pin hole with hammer and drift. Secure in position by tightening set screw.
11. Reinstall Bearing Access Cover.
12. Apply power to wheel and ensure that the wheel rotates freely without interference.

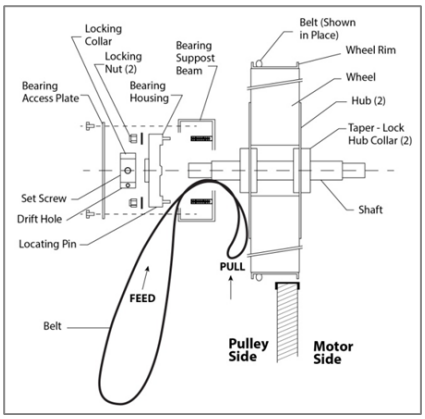


Figure 45: Belt Replacement

## 10.3. Energy Recovery Wheel General Cleaning

Routine maintenance of the Energy Recovery Wheel includes periodic cleaning of the Energy Recovery Wheel as well as inspection of the Air Seals and Wheel Drive Components.

**CAUTION**

Disconnect electrical power before servicing energy recovery cassette. Always keep hands away from bearing support beam when installing or removing segments. Failure to do so could result in severe injury to fingers or hand.

Cleaning the energy transfer media will help maintain optimal performance. The frequency of cleaning is largely dependent on the application and air quality. Use ASHRAE's Classes of Air categories, to create a routine cleaning schedule.

Class 1 air has low contaminant concentration with inoffensive odor and sensory irritation intensity.

Class 2 air has moderate contaminant concentration, with mildly offensive odors or sensory-irritation intensity.

Class 3 air has significant contaminant concentration and significant offensive odor or sensory-irritation intensity.

Class 4 air has highly objectionable fumes or gases and potentially contains dangerous particles, bio-aerosols, or gases at a concentration high enough to be considered harmful, not suitable for recirculation or transfer to any other space.

Table 20: Energy Recovery Wheel Cleaning Information

| Class of Air | Examples | Cleaning Frequency |
|---|---|---|
| Class 1<br>Clean Air | • Offices<br>• Classrooms<br>• Assembly rooms<br>• Churches | Every 8–10 years |
| Class 2<br>Moderately Clean Air | • Restrooms<br>• Swimming pools<br>• Dining rooms<br>• Locker rooms<br>• Warehouse<br>• Dorms | Every 4–6 years |
| Class 3<br>Dirty Air | • Kitchens<br>• Dry cleaners<br>• Beauty salons<br>• Laboratories<br>• Pet shops | Every 1–2 years |
| Class 4<br>Contaminated Air | • Paint spray booths<br>• Laboratory fume exhaust<br>• Kitchen grease exhaust | Do not use in this application |

The energy recovery wheel is "self-cleaning" with respect to dry particles due to its laminar flow characteristics. Smaller particles pass through; larger particles land on the surface and are blown clear as the flow direction is reversed. Any material that builds up on the face of the wheel can be removed with a brush or vacuum. The primary need for cleaning is to remove oil based aerosols that have condensed on energy transfer surfaces.

A characteristic of all dry desiccants, such films can close off micron sized pores at the surface of the desiccant material, reducing the efficiency by which the desiccant can adsorb and desorb moisture and also build up so as to reduce airflow.

In a reasonably clean indoor environment such as a school or office building, measurable reductions of airflow or loss of sensible (temperature) effectiveness may not occur for several years. Measurable changes in latent energy (water vapor) transfer can occur in shorter periods of time in applications such as moderate occupant smoking or cooking facilities. In applications experiencing unusually high levels of occupant smoking or oil based aerosols such as industrial applications involving the ventilation of machine shop areas for example, annual washing of energy transfer may be necessary to maintain latent transfer efficiency. Proper cleaning of the energy recovery wheel will restore latent effectiveness to near original performance.

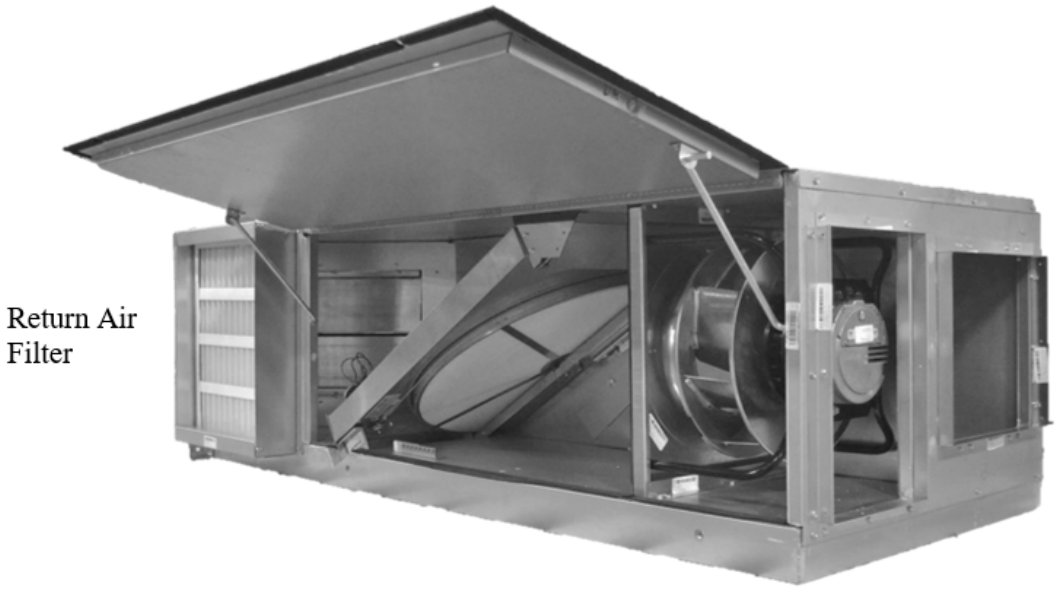


Figure 46: H3 A Or B Cabinet Energy Recovery Wheel
H3 Size A & B Return Air Filters - Access Through Top And Bottom Of The Filter Box.

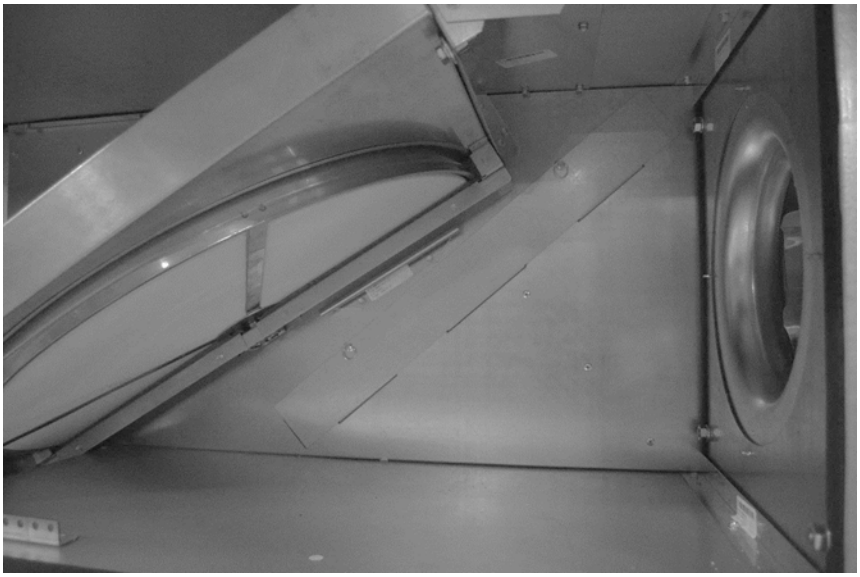

Figure 47: H3 A Or B Cabinet Outside Air Filter Access
H3 Size A & B Outside Air Filters - Access Through Removing The Sheet Metal Piece Shown Above.

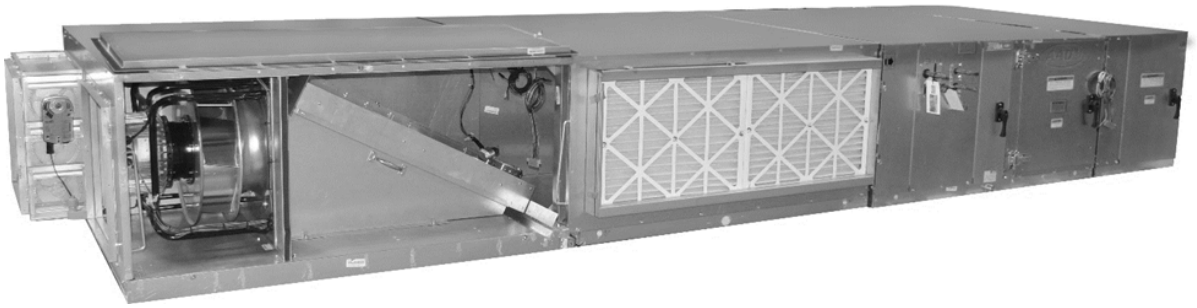

Figure 48: H3 C Cabinet Energy Recovery Wheel

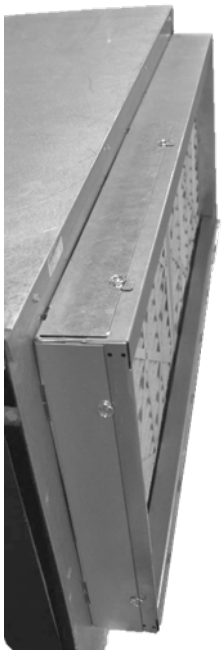

Figure 49: H3 size C return air filters - access through top and left side of the filter box.

Figure 50: H3 C Cabinet Outside Air Filter Access

H3 size C outside air filters - access through removing the sheet metal piece shown above, and removing another sheet metal piece once inside.

Figure 51: H3 D or E Cabinet Energy Recovery Wheel

H3 size D or E return air filters & outside air filters - access by removing the energy recovery wheel access panel.

# 11. GAS AND ELECTRIC HEATING

The unit is designed to heat a given amount of air while operating. If this amount of air is greatly reduced, approximately 1/3 during the heating season, the electric heating coil or gas heater may overheat, and cut the heater off entirely by action of the safety high temperature limit devices which are factory mounted at the heat exchanger and supply fan areas.

Adjust airflow after installation to obtain an air temperature rise within the range specified on the unit rating plate at the required external static pressure.

The tested minimum and maximum range of static pressure for the H3 is 0.4–5.6 mmHg

[electric is 0.2–3.0 in. w.c]. The maximum supply air temperature is 60°C (140°F). The minimum allowable air temperature entering the gas heater is -40 °C (-40°F).

Table 21: Heat Capacity Chart

| | Electric Heat Capacity | | Gas Heat Input Capacity | |
|---|---|---|---|---|
| | kW (230V, 460V) | kW (208V) | MBH | Unit Size |
| **A** = *Heat A* | 7.0 | 5.3 | | |
| **B** = *Heat B* | 14.0 | 10.5 | | |
| **C** = *Heat C* | 21.0 | 15.8 | 50 MBH | H3/V3-A, B |
| **D** = *Heat D* | 28.0 | 21.0 | | |
| **E** = *Heat E* | 35.0 | 26.3 | | |
| **F** = *Heat F* | 42.0 | 31.5 | | |
| **G** = *Heat G* | 49.0 | 37.0 | 90 MBH | H3/V3-A, B, C |
| **H** = *Heat H* | 56.0 | 42.0 | 100 MBH | H3/V3-A, B |
| **J** = *Heat J* | 63.0 | 47.3 | 125 MBH | V3-C |
| **K** = *Heat K* | 70.0 | 52.5 | | |
| **L** = *Heat L* | | | 150 MBH | H3-C, D<br>V3-D |
| **M** = *Heat M* | 84.0 | 63.0 | 180 MBH | H3-D<br>V3-C, D |
| **N** = Heat N | | | 225 MBH | H3-C, D, E<br>V3-E |
| **P** = *Heat P* | | | 200 MBH | H3-D<br>V3-C, D |
| **Q** = *Heat Q* | | | 250 MBH | H3-C, D<br>V3-E |
| **R** = *Heat R* | | | 360 MBH | H3-E<br>V3-D, E |
| **S** = *Heat S* | | | 400 MBH | H3-E<br>V3-D, E |
| **T** = Heat T | | | 300 MBH | H3-E |

# 12. GAS HEATING

**WARNING**

*For Your Safety*

Read the entire gas heating installation section of this manual before beginning installation of the gas heating section.

If you do not follow these instructions exactly, a fire or explosion may result causing property damage, personal injury, or loss of life.

## 12.1. Unit Location and Clearances

1. Be sure unit is located with respect to building construction and other equipment to provide ready access and clearance to access panels or doors that must be opened to permit adjustment and servicing of the heating module.
2. The heating unit provided is listed for installation on the positive side of the circulating air blower only.
3. Locate unit to insure an adequate supply of fresh air to replace air used in the combustion and ventilation process.
4. Do not install exhaust vent where flue products can be drawn into adjacent building openings such as windows, doors, or fresh air intakes. Minimize the number of elbows or turns in vent pipe.
5. Do not install unit where it may exposed to potentially explosive or flammable vapors.
6. Do not locate unit in areas where corrosive vapors (such as chlorinated, halogenated, or acidic) are present in the atmosphere or can be mixed with combustion air entering heater.
7. Mechanical rooms and other spaces with A2L equipment, or lines, will need to conform with ASHRAE 15.

*Gas-Fired Heating*

The Heatco gas-fired duct furnace (HeatBoost) is designed to heat a given amount of air while operating. Adjust airflow after installation to obtain an air temperature rise within the range specified on the unit rating plate at the required external static pressure.

Gas heaters field wiring

For all installation, operation, and maintenance information, refer to the Heatco IOM Style K for open combustion or Style S for separated combustion.

Table 22: Unit Clearance Requirements

| Model / Rated Input | H3/V3 Cabinet | Min. Rise | Max. Rise |
|---|---|---|---|
| HDG050 | H3-A, B<br>V3-A, B | 30 | 90 |
| HDG100 | H3-A, B<br>V3-A, B | | |
| HDG125 | V3-C | | |
| HDG200 | H3-E x 2<br>V3-C | | |
| HDA150 | H3-C, D<br>V3-D | 30 | 100 |
| HDA200 | H3-D<br>V3-D | | |
| HDA250 | H3-C, D<br>V3-E | | |
| HDA400 | V3-D, E | | |
| HDB225 | H3-E | 30 | 90 |
| HDB300 | H3-E | | |
| EMG090 | H3-A, B, C<br>V3-A, B, C | 30 | 100 |
| EMG180 | H3-E x 2<br>V3-C | | |
| EMA180 | H3-D<br>V3-D | 30 | 100 |
| EMA225 | H3-C, D, E<br>V3-E | | |
| EMA360 | V3-D, E | | |

*Input*

The correct heat capacity of the furnace is controlled by the burner orifices and the gas manifold pressure. The manifold pressure is factory set but must be checked at the time of start-up.

The unit's nameplate input rate value is calculated based on the altitude where the unit was shipped. Units installed at an elevation less than 610 meters (2000 feet) above sea level require no derating. At 610 meters (2000 feet) above sea level, a 4% derate adjustment must be applied to the standard input rate. For every additional 305 meters (1000 feet), there is an additional 4% derate adjustment.

For example, at 914 meters (3000 feet) above sea level, the derate adjustment for elevation would be 8%, resulting in a new heat exchanger rate of 92% of the standard input rate listed.

When connecting the HeatBoost gas heater to the air handling unit, be sure to first install the gasket around the opening of the HeatBoost Gas heater. Then install the joint straps that are shipped loose inside the air handling unit. See Figures below.

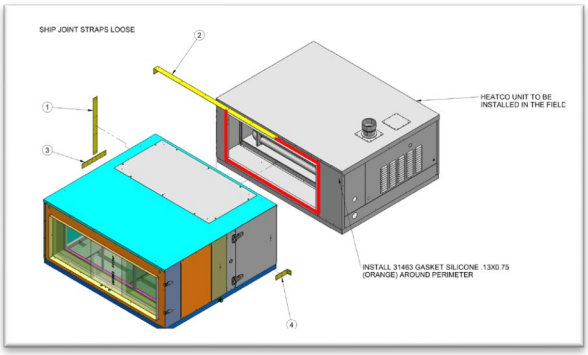


Figure 52 Joint Straps Installation H3-A,B,C

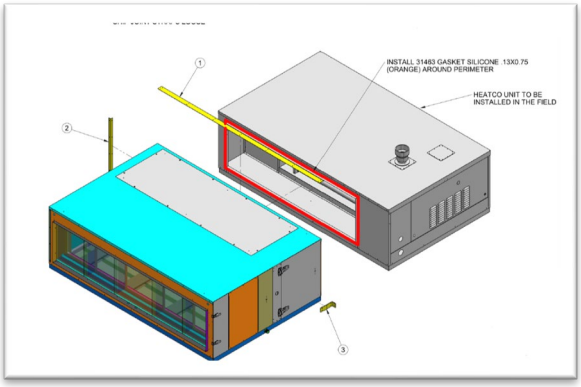


Figure 53 Joint Straps Installation H3-D

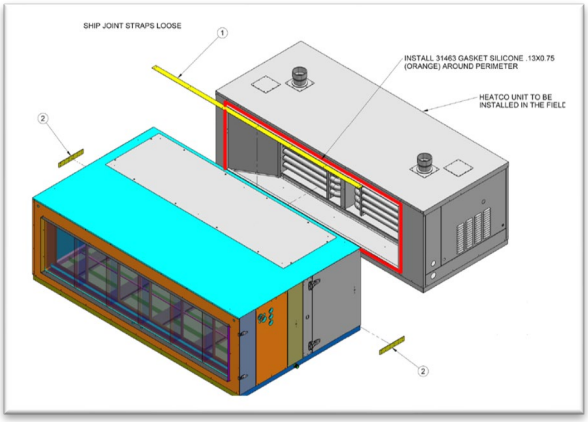


Figure 54 Joint Straps Installation H3-E

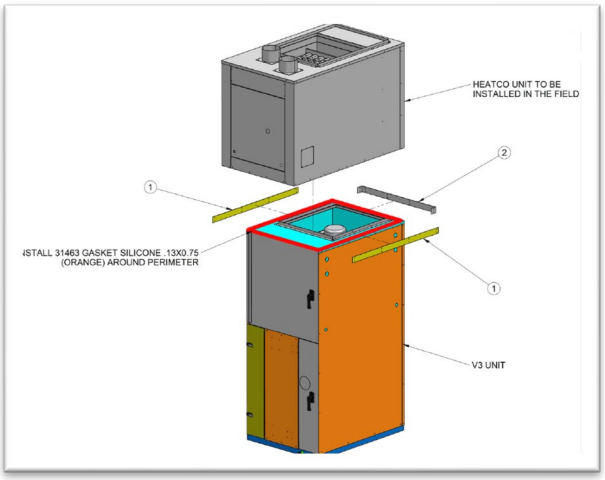


Figure 55 Joint Strap Installation V3

*Piping Supports*

Gas supply piping must be supported directly at the connection to the unit and at intervals listed in the following table with metal straps, blocks, or hooks. Piping must not be strained or bent.

Table 23: Gas Piping Supports (Metric)

| Pipe Size (mm) | Support Intervals |
|---|---|
| 12.7 to 19.1 | Every 1.8 m |
| 19.1 to 25.4 | Every 2.4 m |
| 44.5 or Larger (Horizontal) | Every 3 m |
| 31.8 or Larger | Every Floor |

Table 24: Gas Piping Supports (Imperial)

| Pipe Size | Support Intervals |
|---|---|
| 1/2" to 3/4" | Every 6 ft |
| 3/4" to 1" | Every 8 ft |
| 1-3/4" or Larger (Horizontal) | Every 10 ft |
| 1-1/4" or Larger (Vertical) | Every Floor |

## 12.2. Leak Testing

All components of gas supply system, including manual shut off valves and the piping in the interior of the unit, must be leak tested with a soap solution before operating the appliance and at least on an annual basis thereafter.

**WARNING**

Gas pressure to appliance controls must never exceed 14" w.c. (1/2 psi)

1. When pressure testing at 1/2 psi or less, close the manual shutoff valve on the appliance before testing.

2. When pressure testing gas supply line at 1/2 psi or higher, close manual gas valve and disconnect heater from supply line to be tested. Cap or plug the supply line.

**DANGER**

*Leak Check Gas Pipe*

The gas pipe in the unit shall be checked for leaks before operation and startup. Unit must not be placed in operation until a leak check has been conducted for all gas piping connections. All connections shall be checked for leaks annually after installation. Gas leaks could result in fire, explosion, or other hazardous situations.

**CAUTION**

Some soaps used for leak detection can be corrosive to certain metals. Rinse piping thoroughly after leak test has been completed.

**WARNING**

*Fire Or Explosion Hazard*

Failure to follow the safety warnings exactly could result in serious injury, death or property damage.

Never test for gas leaks with an open flame. Use a commercially available soap solution made specifically for the detection of leaks to check all connections. A fire or explosion may result causing property damage, personal injury or loss of life.

## 12.3. Phase and Brownout Protection Module

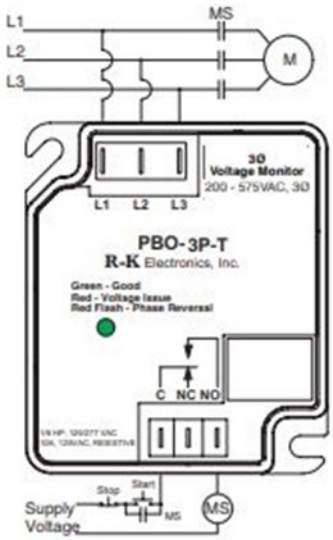


Figure 56: PBO

The PBO-3P-T monitors line voltages from 200VAC to 575VAC 3Φ. The PBO-3P-T must be wired according to unit specific wiring diagram included in the control compartment. Output relay will be de-energized after the trip.

*UV Lights*

Some units include UV lights for airstream disinfection. The UV fixture is installed directly downstream of cooling coil. Door interlock switches are provided with this option.

UV lamps ship loose in the vestibule and require installation during startup. Useful lamp life shall be 9000 hours (minimum) with no more than a 15% output loss at the end of the lamps life. Use AAON Part # R68850 for lamp replacement.

**WARNING**

*UV Lights*

Never expose eyes or skin to UVC light from any source, as personal injury may result. Wear gloves, face shield/glasses (per ANSI Z87.1) and cover all exposed skin.

# 13. FILTER REPLACEMENT

Monthly filter inspection is required to maintain optimum unit efficiency.

**WARNING**

Electric shock hazard. Shut off all electrical power to the unit to avoid shock hazard or injury from rotating parts.

It is strongly recommended that filter media be replaced monthly. Filters are located upstream of the evaporator coil. Open access panel and pull filters straight out to inspect all of the filters. Replace filters with the size indicated on each filter. Arrow on the replacement filters must point towards the blower. Units with an energy recovery wheel with have additional filters. See the Filter replacement section under the energy recover wheel section for more information.

# 14. REPLACEMENT PARTS

Parts for AAON equipment may be obtained from your local representative https://www.aaon.com/find-a-rep. When ordering parts, reference the unit serial number and part number.

AAON
Warranty, Service and Parts Department
203 Gum Springs Rd.
Longview, TX 75602
Ph: (918) 382-6450
techsupport@AAON.com
www.AAON.com

**Note:** Before calling, technician must have model and serial number of the unit available for the service department to help answer questions regarding the unit.

# 15. DECOMMISSIONING

Before decommissioning unit, ensure you are familiar with the unit and its operation. Only individuals qualified for handling refrigerant may remove charge from the unit. Unit must be isolated electrically before beginning any decommissioning work. Proper PPE is required

Ensure any equipment that may be needed for handling refrigerant cylinders safely is available. Equipment and cylinders used for recovery must be in good working order and comply with appropriate standards.

Operate recovery machine in accordance with the instructions. Remove refrigerant from all parts of the refrigeration system. On heat pumps, refrigerant must be recovered from discharge, suction and common liquid lines.

Weigh out refrigerant when removing to ensure that all refrigerant is removed and cylinders are not overfilled. Place refrigerant cylinder on scales before beginning recovery process. Do not exceed maximum pressure of cylinder.

When recovery is completed, remove all cylinders containing recovered refrigerant from the site. Ensure all isolation valves on equipment are closed and all warning decals are still visible on unit. Label the unit as having been decommissioned and date and sign label.

# 16. WARRANTY

Refer to the Limited Warranty Certificate for the unit warranty details. Contact your AAON representative for a unit specific copy of the certificate for your serial number.

## Limited Warranty Certificate

**GENERAL CONDITIONS**
AAON Coil Products, Inc. (hereinafter referred to as "ACP") warrants this ACP equipment, as identified hereon, to be free of defects in material and workmanship under normal use, service, and maintenance. Our obligations under this warranty must be limited to repairing or replacing the defective part, or parts, which in our judgment show evidence of such defects. ACP is not liable for labor charges and other costs incurred for removing, shipping, handling or transporting defective part, or parts, or for shipping, handling, transporting, or installing repaired or replacement part, or parts.

The limited warranty is effective one (1) year from date of **original installation**, or eighteen (18) months from date of original shipment from the factory, whichever occurs first and covers all parts and components in this ACP equipment excluding air filters, belts, refrigerant moisture driers, and lost refrigerant, which are not included in any part of this limited warranty. The replacement part, or parts, assume only the unused portion of the original limited warranty and are shipped f.o.b. from the factory and freight prepaid by the factory.

The limited warranty is effective for products manufactured at the Tulsa, Oklahoma or Longview, Texas facility.

THIS LIMITED WARRANTY ONLY APPLIES WHEN THE **ORIGINAL MODEL NUMBER AND SERIAL NUMBER** OF THE ACP UNIT ARE GIVEN AT TIME OF REQUEST FOR REPLACEMENT PART, OR PARTS. DEFECTIVE PART, OR PARTS, MUST BE RETURNED **PREPAID**, WITH ITS ASSIGNED RETURN MATERIAL TAG, WITHIN FOURTEEN (14) DAYS OF RECEIPT OF THE REPLACEMENT PART, OR PARTS.

**EXTENDED LIMITED WARRANTY ON COMPRESSORS INCLUDED IN SINGLE PACKAGE EQUIPMENT (NOT INCLUDING CHILLERS); OPTIONAL ON OTHER EQUIPMENT**
For the second through the fifth year from date of **shipment**, we further agree to repair or replace the fully hermetic compressor, at our option, for the **original purchase-user only**. The repaired or replacement fully hermetic compressor will be supplied f.o.b. the factory, freight **prepaid and add**, providing the defective fully hermetic compressor is returned **prepaid by the customer**, and is proven to be inoperative due to defects in materials or workmanship. This extended limited warranty covers **only** the fully hermetic compressor and **does not include** any labor charges, or other additional costs incurred for removing, shipping, handling, transporting, or replacing the defective fully hermetic compressor. It also **does not include** additional costs incurred for shipping, handling, or transporting of electric controls such as relays, capacitors, pressure controls, or fan-motor assemblies, condensers, receivers, etc, which carry the standard **one-year limited warranty**.

**EXTENDED LIMITED WARRANTY OF M2/V3/H3 SERIES GAS FIRED HEAT EXCHANGERS**
For the second through the tenth year from date of original installation, we further warrant the steel heat exchanger against failure due to defects in materials and workmanship for the original purchaser-user only, in accordance with the following: For the first five (5) years from date of shipment, we agree to repair or replace the heat exchanger, at our option, for the original purchaser-user only; during the sixth year, we will charge 50% of the current trade price for repaired or replacement steel heat exchanger, as the case may be, during the seventh year, 60%, during the eighth year, 70% during the ninth year, 80% and during the tenth year, 90%.

In all cases, the repaired or replacement heat exchanger will be supplied f.o.b. our factory, freight prepaid, providing the defective heat exchanger is returned **prepaid**, and if it is proved to be inoperative due to defects in materials and workmanship. This extended limited warranty covers **only** the heat exchanger and **does not include** labor charges, or other costs incurred for removing, shipping, handling, transporting, or installing repaired replacement heat exchanger. This extend limited warranty **does not apply** where the furnace has been operated in an atmosphere contaminated by chlorine, fluorine, or any other damaging chemical compounds.

**FOR OPTIONAL FIVE YEAR EXTENDED LIMITED WARRANTY OF COIL COATING**
For the second through fifth year from date of shipment, we further warrant the coating of e-coated coils on the equipment against failure due to defects in materials and workmanship for the original purchaser-user only. Coil cleaning, maintenance, and record keeping must be followed according to the unit Installation, Operation and Maintenance Manual to maintain warranty.

**OTHER CONDITIONS**
This warranty **does not cover** any ACP unit or part thereof which has been subject to accident, negligence, damages in transit, misuse or abuse, **or which has been tampered with or altered in any way**, or which has **not** been installed operated serviced and maintained in accordance with our instructions, or which has been installed outside of the Continental United States or Canada, or on which the serial number or identification number has been altered defaced, or removed. ACP will not be responsible for failure of the unit to start due to voltage conditions, blown fuses, open circuit breakers, or other damages due to the inadequacy or interruption of electric service.

This warranty **does not cover** equipment containing a water-to-refrigerant heat exchanger for any damage resulting from freezing, fouling, corrosion or clogging.

ACP must not be liable for any default or delay in performance hereunder, caused by a contingency beyond its control, including governmental restrictions or restraint, strikes, short or reduced supply of raw materials or parts, floods, winds, fire, lightning strikes, or any other acts of God.

1 of 2

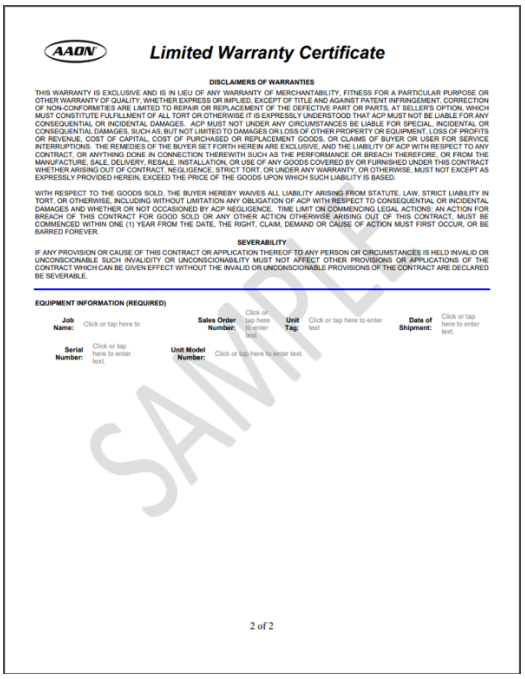

## Limited Warranty Certificate

**DISCLAIMERS OF WARRANTIES**

THIS WARRANTY IS EXCLUSIVE AND IS IN LIEU OF ANY WARRANTY OF MERCHANTABILITY, FITNESS FOR A PARTICULAR PURPOSE OR OTHER WARRANTY OF QUALITY, WHETHER EXPRESS OR IMPLIED, EXCEPT OF TITLE AND AGAINST PATENT INFRINGEMENT. CORRECTION OF NON-CONFORMITIES ARE LIMITED TO REPAIR OR REPLACEMENT OF THE DEFECTIVE PART OR PARTS, AT SELLER'S OPTION, WHICH MUST CONSTITUTE FULFILLMENT OF ALL TORT OR OTHERWISE IT IS EXPRESSLY UNDERSTOOD THAT ACP MUST NOT BE LIABLE FOR ANY CONSEQUENTIAL OR INCIDENTAL DAMAGES. ACP MUST NOT UNDER ANY CIRCUMSTANCES BE LIABLE FOR SPECIAL, INCIDENTAL OR CONSEQUENTIAL DAMAGES, SUCH AS, BUT NOT LIMITED TO DAMAGES OR LOSS OF OTHER PROPERTY OR EQUIPMENT, LOSS OF PROFITS OR REVENUE, COST OF CAPITAL, COST OF PURCHASED OR REPLACEMENT GOODS, OR CLAIMS OF BUYER OR USER FOR SERVICE INTERRUPTIONS. THE REMEDIES OF THE BUYER SET FORTH HEREIN ARE EXCLUSIVE, AND THE LIABILITY OF ACP WITH RESPECT TO ANY CONTRACT, OR ANYTHING DONE IN CONNECTION THEREWITH SUCH AS THE PERFORMANCE OR BREACH THEREFORE, OR FROM THE MANUFACTURE, SALE, DELIVERY, RESALE, INSTALLATION, OR USE OF ANY GOODS COVERED BY OR FURNISHED UNDER THIS CONTRACT WHETHER ARISING OUT OF CONTRACT, NEGLIGENCE, STRICT TORT, OR UNDER ANY WARRANTY, OR OTHERWISE, MUST NOT EXCEPT AS EXPRESSLY PROVIDED HEREIN, EXCEED THE PRICE OF THE GOODS UPON WHICH SUCH LIABILITY IS BASED.

WITH RESPECT TO THE GOODS SOLD, THE BUYER HEREBY WAIVES ALL LIABILITY ARISING FROM STATUTE, LAW, STRICT LIABILITY IN TORT, OR OTHERWISE, INCLUDING WITHOUT LIMITATION ANY OBLIGATION OF ACP WITH RESPECT TO CONSEQUENTIAL OR INCIDENTAL DAMAGES AND WHETHER OR NOT OCCASIONED BY ACP NEGLIGENCE. TIME LIMIT ON COMMENCING LEGAL ACTIONS: AN ACTION FOR BREACH OF THIS CONTRACT FOR GOOD SOLD OR ANY OTHER ACTION OTHERWISE ARISING OUT OF THIS CONTRACT, MUST BE COMMENCED WITHIN ONE (1) YEAR FROM THE DATE, THE RIGHT, CLAIM, DEMAND OR CAUSE OF ACTION MUST FIRST OCCUR, OR BE BARRED FOREVER.

**SEVERABILITY**

IF ANY PROVISION OR CAUSE OF THIS CONTRACT OR APPLICATION THEREOF TO ANY PERSON OR CIRCUMSTANCES IS HELD INVALID OR UNCONSCIONABLE SUCH INVALIDITY OR UNCONSCIONABILITY MUST NOT AFFECT OTHER PROVISIONS OR APPLICATIONS OF THE CONTRACT WHICH CAN BE GIVEN EFFECT WITHOUT THE INVALID OR UNCONSCIONABLE PROVISIONS OF THE CONTRACT ARE DECLARED BE SEVERABLE.

**EQUIPMENT INFORMATION (REQUIRED)**

**Job Name:** Click or tap here to
**Sales Order Number:** Click or tap here to enter text.
**Unit Tag:** Click or tap here to enter text
**Date of Shipment:** Click or tap here to enter text.
**Serial Number:** Click or tap here to enter text.
**Unit Model Number:** Click or tap here to enter text.

2 of 2

Table 25: H3 Series A Cabinet Unit Filters

| Feature 6B | Qty. Size (cm) [in.] | Type |
|---|---|---|
| 0 | No Pre Filters | |
| A | (1) 40.6 x 63.5 x 5.1<br>[16 x 25 x 2] | Pleated MERV 8 |
| B | (1) 40.6 x 63.5 x 10.2<br>[16 x 25 x 4] | Pleated MERV 8 |
| C | | Pleated MERV 11 |
| D | | Pleated MERV 13 |
| E | | Pleated MERV 14 |
| F | (1) 40.6 x 63.5 x 5.1 and<br>(1) 40.6 x 63.5 x 10.2<br><br>[16 x 25 x 2 and 16 x 25 x 4] | Pleated MERV 8 and<br>Pleated MERV 8 |
| G | | Pleated MERV 8 and<br>Pleated MERV 11 |
| H | | Pleated MERV 8 and<br>Pleated MERV 13 |
| J | | Pleated MERV 8 and<br>Pleated MERV 14 |

Table 26: H3 Series B Cabinet Unit Filters

| Feature 6B | Qty. Size (cm) [in.] | Type |
|---|---|---|
| 0 | No Pre Filters | |
| A | (2) 40.6 x 50.8 x 5.1<br>[16 x 20 x 2] | Pleated MERV 8 |
| B | (2) 40.6 x 50.8 x 10.2<br>[16 x 20 x 4] | Pleated MERV 8 |
| C | | Pleated MERV 11 |
| D | | Pleated MERV 13 |
| E | | Pleated MERV 14 |
| F | (2) 40.6 x 50.8 x 5.1 and<br>(2) 40.6 x 50.8 x 10.2<br><br>[16 x 20 x 2 and16 x 20 x 4] | Pleated MERV 8 and<br>Pleated MERV 8 |
| G | | Pleated MERV 8 and<br>Pleated MERV 11 |
| H | | Pleated MERV 8 and<br>Pleated MERV 13 |
| J | | Pleated MERV 8 and<br>Pleated MERV 14 |

Table 27: H3 Series C Cabinet Unit Filters

| Feature 6B | Qty. Size (cm) [in.] | Type |
|---|---|---|
| 0 | No Pre Filters | |
| A | (2) 50.8 x 50.8 x 5.1 and<br>(1) 40.6 x 50.8 x 5.1<br>[20 x 20 x 2 and 16 x 20 x 2] | Pleated MERV 8 |
| B | (2) 50.8 x 50.8 x 10.2 and<br>(1) 40.6 x 50.8 x 10.2<br>[20 x 20 x 4 and 16 x 20 x 4] | Pleated MERV 8 |
| C | | Pleated MERV 11 |
| D | | Pleated MERV 13 |
| E | | Pleated MERV 14 |
| F | (2) 50.8 x 50.8 x 5.1 and<br>(1) 40.6 x 50.8 x 5.1<br>and<br>(2) 50.8 x 50.8 x 10.2 and<br>(1) 40.6 x 50.8 x 10.2<br>[20 x 20 x 2 and 16 x 20 x 2]<br>and<br>[20 x 20 x 4 and 16 x 20 x 4] | Pleated MERV 8 and<br>Pleated MERV 8 |
| G | | Pleated MERV 8 and<br>Pleated MERV 11 |
| H | | Pleated MERV 8 and<br>Pleated MERV 13 |
| J | | Pleated MERV 8 and<br>Pleated MERV 14 |

Table 28: H3 Series D Cabinet Unit Filters

| Feature 6B | Qty. Size (cm) [in.] | Type |
|---|---|---|
| 0 | No Pre Filters | |
| A | (1) 50.8 x 50.8 x 5.1 and<br>(4) 40.6 x 50.8 x 5.1<br>[20 x 20 x 2 and 16 x 20 x 2] | Pleated MERV 8 |
| B | (1) 50.8 x 50.8 x 10.2 and<br>(4) 40.6 x 50.8 x 10.2<br>[20 x 20 x 4 and 16 x 20 x 4] | Pleated MERV 8 |
| C | | Pleated MERV 11 |
| D | | Pleated MERV 13 |
| E | | Pleated MERV 14 |
| F | (1) 50.8 x 50.8 x 5.1 and<br>(4) 40.6 x 50.8 x 5.1<br>and<br>(1) 50.8 x 50.8 x 10.2 and<br>(4) 40.6 x 50.8 x 10.2<br>[20 x 20 x 2 and 16 x 20 x 2]<br>and<br>[20 x 20 x 4 and 16 x 20 x 4] | Pleated MERV 8 and<br>Pleated MERV 8 |
| G | | Pleated MERV 8 and<br>Pleated MERV 11 |
| H | | Pleated MERV 8 and<br>Pleated MERV 13 |
| J | | Pleated MERV 8 and<br>Pleated MERV 14 |

Table 29: H3 Series E Cabinet Unit Filters

| Feature 6B | Qty. Size (cm) [in.] | Type |
|---|---|---|
| 0 | No Pre Filters | |
| A | (6) 40.6 x 63.5 x 5.1<br>[16 x 25 x 2] | Pleated MERV 8 |
| B | (6) 40.6 x 63.5 x 10.2<br>[16 x 25 x 4] | Pleated MERV 8 |
| C | | Pleated MERV 11 |
| D | | Pleated MERV 13 |
| E | | Pleated MERV 14 |
| F | (6) 40.6 x 63.5 x 5.1 and<br>(6) 40.6 x 63.5 x 10.2<br><br>[16 x 25 x 2 and 16 x 25 x 4] | Pleated MERV 8 and<br>Pleated MERV 8 |
| G | | Pleated MERV 8 and<br>Pleated MERV 11 |
| H | | Pleated MERV 8 and<br>Pleated MERV 13 |
| J | | Pleated MERV 8 and<br>Pleated MERV 14 |

Table 30: H3 Series A Cabinet Final Filters

| Feature 6C | Qty. Size (cm) [in.] | Type |
|---|---|---|
| 0 | No Final Filters | |
| A | (1) 40.6 x 63.5 x 5.1<br>[16 x 25 x 2] | Pleated MERV 8 |
| B | (1) 40.6 x 63.5 x 30.5<br>[16 x 25 x 12] | Cartridge MERV 11 |
| C | | Cartridge MERV 13 |
| D | | Cartridge MERV 14 |
| E | (1) 40.6 x 63.5 x 5.1 and<br>40.6 x 63.5 x 30.5<br>[16 x 25 x 2 and 16 x 25 x 12] | Pleated MERV 8 and<br>Cartridge MERV 11 |
| F | | Pleated MERV 8 and<br>Cartridge MERV 13 |
| G | | Pleated MERV 8 and<br>Cartridge MERV 14 |

Table 31: H3 Series B Cabinet Final Filters

| Feature 6C | Qty. Size (cm) [in.] | Type |
|---|---|---|
| 0 | No Final Filters | |
| A | (2) 40.6 x 50.8 x 5.1<br>[16 x 20 x 2] | Pleated MERV 8 |
| B | (2) 40.6 x 50.8 x 30.5<br>[16 x 20 x 12] | Cartridge MERV 11 |
| C | | Cartridge MERV 13 |
| D | | Cartridge MERV 14 |
| E | (2) 40.6 x 50.8 x 5.1 and<br>(2) 40.6 x 50.8 x 30.5<br>[16 x 20 x 2 and 16 x 20 x 12] | Pleated MERV 8 and<br>Cartridge MERV 11 |
| F | | Pleated MERV 8 and<br>Cartridge MERV 13 |
| G | | Pleated MERV 8 and<br>Cartridge MERV 14 |

Table 32: H3 Series C Cabinet Final Filters

| Feature 6C | Qty. Size (cm) [in.] | Type |
|---|---|---|
| 0 | No Final Filters | |
| A | (2) 50.8 x 50.8 x 5.1 and<br>(1) 40.6 x 50.8 x 5.1<br>[20 x 20 x 2 and 16 x 20 x 2] | Pleated MERV 8 |
| B | (2) 50.8 x 50.8 x 30.5 and<br>(1) 40.6 x 50.8 x 30.5<br>[20 x 20 x12 and 16 x 20 x 12] | Cartridge MERV 11 |
| C | | Cartridge MERV 13 |
| D | | Cartridge MERV 14 |
| E | (2) 50.8 x 50.8 x 5.1 and<br>(1) 40.6 x 50.8 x 5.1<br>and<br>(2) 50.8 x 50.8 x 30.5 and<br>(1) 40.6 x 50.8 x 30.5<br>[20 x 20 x 2 and 16 x 20 x 2]<br>and<br>[20 x 20 x12 and 16 x 20 x 12] | Pleated MERV 8 and<br>Cartridge MERV 11 |
| F | | Pleated MERV 8 and<br>Cartridge MERV 13 |
| G | | Pleated MERV 8 and<br>Cartridge MERV 14 |

Table 33: H3 Series D Cabinet Final Filters

| Feature 6C | Qty. Size (cm) [in.] | Type |
|---|---|---|
| 0 | No Final Filters | |
| A | (4) 50.8 x 50.8 x 5.1<br>[20 x 20 x 2] | Pleated MERV 8 |
| B | (4) 50.8 x 50.8 x 30.5<br>[20 x 20 x 12] | Cartridge MERV 11 |
| C | | Cartridge MERV 13 |
| D | | Cartridge MERV 14 |
| E | (4) 50.8 x 50.8 x 5.1 and<br>(4) 50.8 x 50.8 x 30.5<br>[20 x 20 x 2 and 20 x 20 x 12] | Pleated MERV 8 and<br>Cartridge MERV 11 |
| F | | Pleated MERV 8 and<br>Cartridge MERV 13 |
| G | | Pleated MERV 8 and<br>Cartridge MERV 14 |

Table 34: H3 Series E Cabinet Final Filters

| Feature 6C | Qty. Size (cm) [in.] | Type |
|---|---|---|
| 0 | No Final Filters | |
| A | (6) 40.6 x 63.5 x 5.1<br>[16 x 25 x 2] | Pleated MERV 8 |
| B | (6) 40.6 x 63.5 x 30.5<br>[16 x 25 x 12] | Cartridge MERV 11 |
| C | | Cartridge MERV 13 |
| D | | Cartridge MERV 14 |
| E | (6) 40.6 x 63.5 x 5.1 and<br>(6) 40.6 x 63.5 x 30.5<br>[16 x 25 x 2 and 16 x 25 x 12] | Pleated MERV 8 and<br>Cartridge MERV 11 |
| F | | Pleated MERV 8 and<br>Cartridge MERV 13 |
| G | | Pleated MERV 8 and<br>Cartridge MERV 14 |

Table 35: H3 Series Energy Recovery OA Filters (Feature 13 ≠ 0)

| Unit Size | Qty. Size (cm) [in.] | Type |
|---|---|---|
| A | (1) 70 x 30.5 x 5.1<br>[24 x 12 x 2] | Pleated MERV 8 |
| B | (1) 50.8 x 63.5 x 5.1<br>[20 x 25 x 2] | Pleated MERV 8 |
| C | (2) 70 x 70 x 5.1<br>[24 x 24 x 2] | Pleated MERV 8 |
| D | (4) 40.6 x 50.8 x 5.1<br>(1) 50.8 x 50.8 x 5.1<br>[16 x 20 x 2] [20 x 20 x 2] | Pleated MERV 8 |
| E | (6) 40.6 x 63.5 x 5.1<br>[16 x 25 x 2] | Pleated MERV 8 |

Table 36: H3 Series Energy Recovery RA Filters (Feature 13 ≠ 0)

| Unit Size | Qty. Size (cm) [in.] | Type |
|---|---|---|
| A | (1) 40.6 x 50.8 x 5.1<br>[16 x 20 x 2] | Pleated MERV 8 |
| B | (1) 50.8 x 63.5 x 5.1<br>[20 x 25 x 2] | Pleated MERV 8 |
| C | (2) 50.8 x 63.5 x 5.1<br>[20 x 25 x 2] | Pleated MERV 8 |
| D | (4) 40.6 x 50.8 x 5.1<br>(1) 50.8 x 50.8 x 5.1<br>[16 x 20 x 2] [20 x 20 x 2] | Pleated MERV 8 |
| E | (6) 40.6 x 63.5 x 5.1<br>[16 x 25 x 2] | Pleated MERV 8 |

Table 37: V3 Series A Cabinet Unit Filters

| Feature 6B | Qty. Size (cm) [in.] | Type |
|---|---|---|
| 0 | No Pre Filters | |
| A | (1) 40.6 x 63.5 x 5.1 [16 x 25 x 2] | Pleated MERV 8 |
| B | (1) 40.6 x 63.5 x 10.2 [16 x 25 x 4] | Pleated MERV 8 |
| C | | Pleated MERV 11 |
| D | | Pleated MERV 13 |
| E | | Pleated MERV 14 |
| F | (1) 40.6 x 63.5 x 5.1 and (1) 40.6 x 63.5 x 10.2 [16 x 25 x 2 and 16 x 25 x 4] | Pleated MERV 8 and Pleated MERV 8 |
| G | | Pleated MERV 8 and Pleated MERV 11 |
| H | | Pleated MERV 8 and Pleated MERV 13 |
| J | | Pleated MERV 8 and Pleated MERV 14 |

Table 38: V3 Series B Cabinet Unit Filters

| Feature 6B | Qty. Size (cm) [in.] | Type |
|---|---|---|
| 0 | No Pre Filters | |
| A | (1) 61 x 61 x 5.1 [24 x 24 x 2] | Pleated MERV 8 |
| B | (1) 61 x 61 x 10.2 [24 x 24 x 4] | Pleated MERV 8 |
| C | | Pleated MERV 11 |
| D | | Pleated MERV 13 |
| E | | Pleated MERV 14 |
| F | (1) 61 x 61 x 5.1 and (1) 61 x 61 x 10.2 [24 x 24 x 2 and 24 x 24 x 4] | Pleated MERV 8 and Pleated MERV 8 |
| G | | Pleated MERV 8 and Pleated MERV 11 |
| H | | Pleated MERV 8 and Pleated MERV 13 |
| J | | Pleated MERV 8 and Pleated MERV 14 |

Table 39: V3 Series C Cabinet Unit Filters

| Feature 6B | Qty. Size (cm) [in.] | Type |
|---|---|---|
| 0 | No Pre Filters | |
| A | (4) 40.6 x 50.8 x 5.1<br>[16 x 20 x 2] | Pleated MERV 8 |
| B | (4) 40.6 x 50.8 x<br>10.2<br>[16 x 20 x 4] | Pleated MERV 8 |
| C | | Pleated MERV 11 |
| D | | Pleated MERV 13 |
| E | | Pleated MERV 14 |
| F | (4) 40.6 x 50.8 x 5.1<br>and<br>(4) 40.6 x 50.8 x 10.2<br>[16 x 20 x 2 and16 x 20 x 4] | Pleated MERV 8 and Pleated MERV 8 |
| G | | Pleated MERV 8<br>and<br>Pleated MERV 11 |
| H | | Pleated MERV 8 and Pleated MERV 13 |
| J | | Pleated MERV 8 and Pleated MERV 14 |

Table 40: V3 Series D Cabinet Unit Filters

| Feature 6B | (Qty.) Size (cm) [in.] | Type |
|---|---|---|
| 0 | No Unit Filters | |
| A | (4) 45.7 x 61 x 5.1<br>[18 x 24 x 2] | Pleated, MERV 8 |
| B | (4) 45.7 x 61 x 10.2<br>[18 x 24 x 4] | Pleated, MERV 8 |
| C | | Pleated, MERV 11 |
| D | | Pleated, MERV 13 |
| E | | Pleated, MERV 14 |
| F | (4) 45.7 x 61 x 5.1<br>and<br>(4) 45.7 x 61 x 10.2<br>[18 x 24 x 2 and 18 x 24 x 4] | Pleated, MERV 8 and Pleated, MERV 8 |
| G | | Pleated, MERV 8<br>and<br>Pleated, MERV 11 |
| H | | Pleated, MERV 8 and Pleated, MERV 13 |
| J | | Pleated, MERV 8 and Pleated, MERV 14 |

Table 41: V3 Series E Cabinet Unit Filters

| Feature 6A | (Qty.) Size (cm) [in.] | Type |
|---|---|---|
| 0 | No Unit Filters | |
| A | (6) 45.7 x 61 x 5.1<br>[18 x 24 x 2] | Pleated, MERV 8 |
| B | (6) 45.7 x 61 x 10.2<br>[18 x 24 x 4] | Pleated, MERV 8 |
| C | | Pleated, MERV 11 |
| D | | Pleated, MERV 13 |
| E | | Pleated, MERV 14 |
| F | (6) 45.7 x 61 x 5.1<br>and<br>(6) 45.7 x 61 x 10.2<br>[18 x 24 x 2 and 18 x 24 x 4] | Pleated, MERV 8 and Pleated, MERV 8 |
| G | | Pleated, MERV 8 and Pleated, MERV 11 |
| H | | Pleated, MERV 8<br>and<br>Pleated, MERV 13 |
| J | | Pleated, MERV 8 and Pleated, MERV 14 |

Table 42: V3 Series A Cabinet Final Filters

| Feature 6C | (Qty.) Size (cm) [in.] | Type |
|---|---|---|
| 0 | No Final Filters | |
| H | (1) 40.6 x 63.5 x 10.2<br>[16 x 25 x 4] | Pleated, MERV 8 |
| J | | Pleated, MERV 11 |
| K | | Pleated, MERV 13 |
| L | | Pleated, MERV 14 |

Table 43: V3 Series B Cabinet Final Filters

| Feature 6C | (Quantity) Size | Type |
|---|---|---|
| 0 | No Final Filters | |
| H | (1) 61 x 61 x 10.2<br>[24 x 24 x 4] | Pleated, MERV 8 |
| J | | Pleated, MERV 11 |
| K | | Pleated, MERV 13 |
| L | | Pleated, MERV 14 |

Table 44: V3 Series C Cabinet Final Filters

| Feature 6C | (Qty.) Size (cm) [in.] | Type |
|---|---|---|
| 0 | No Final Filters | |
| H | (2) 50.8 x 63.5 x 10.2 [20 x 25 x 4] | Pleated, MERV 8 |
| J | | Pleated, MERV 11 |
| K | | Pleated, MERV 13 |
| L | | Pleated, MERV 14 |

Table 45: V3 Series Energy Recovery OA Filters (Feature 13 = A–V)

| Unit Size | Qty. Size (cm) [in.] | Type |
|---|---|---|
| A | (1) 40.6 x 63.5 x 5.1 [16 x 25 x 2] | Pleated MERV 8 |
| B | (1) 61 x 61 x 5.1 [24 x 24 x 2] | Pleated MERV 8 |
| C | (4) 40.6 x 50.8 x 5.1 [16 x 20 x 2] | Pleated MERV 8 |
| D | (4) 45.7 x 61 x 5.1 [18 x 24 x 2] | Pleated, MERV 8 |
| E | (8) 40.6 x 50.8 x 5.1 [16 x 20 x 2] | Pleated, MERV 8 |

## Refrigerant Piping Diagrams

See the matching Condensing Unit IOM for Piping Diagrams

# This Page Intentionally Left Blank

# 17. H3 SERIES STARTUP FORM

Job Name: _____ Date: _____

Installed Address:

_____

_____

Model Number: _____

Serial Number: _____ Tag: _____

Startup Contractor: _____

Address: _____

_____ Phone: _____

## 17.1. Pre Startup Checklist

| Installing contractor must verify the following items. | |
|---|---|
| 1. Is there any visible shipping damage? | ☐YES |
| 2. Is the unit level? | ☐YES |
| 3. Are the unit clearances adequate for service and operation? | ☐YES |
| 4. Do all access doors open freely and are the handles operational? | ☐YES |
| 5. Have all shipping braces been removed? | ☐YES |
| 6. Have all electrical connections been tested for tightness? | ☐YES |
| 7. Does the electrical service correspond to the unit nameplate? | ☐YES |
| 8. On 208/230V units, has transformer tap been checked? | ☐YES |
| 9. Has overcurrent protection been installed to match the unit nameplate requirement? | ☐YES |
| 10. Have all set screws on the fans been tightened? | ☐YES |
| 11. Do all fans rotate freely? | ☐YES |
| 12. Does the field water piping to the unit appear to be correct per design parameters? | ☐YES |
| 13. Is all copper tubing isolated so that it does not rub? | ☐YES |
| 14. Have the damper assemblies been inspected? | ☐YES |
| 15. Are air filters installed with proper orientation? | ☐YES |
| 16. Have condensate drain and p-trap been connected? | ☐YES |
| 17. Is the TXV sensing bulb in the correct location? | ☐YES |
| 18. Does the TXV sensing bulb have proper thermal contact and is properly insulated? | ☐YES |
| 19. Are all ship-loose components and cabinets (if applicable) installed per unit drawing and wiring diagram. | ☐YES |
| 20. Is the actual refrigerant charge of the largest circuit in accordance with the required conditioned floor area according to<br><br>Table 18, Table 19, Table 20? | ☐YES |
| 21. Are ventilation and exhaust openings unobstructed? | ☐YES |
| 22. Are markings, decals, and warnings on unit clearly visible? | ☐YES |

| Installing contractor must verify the following items. | |
|---|---|
| 23. Are all damaged or illegible markings and warnings replaced? | ☐YES |
| 24. Has the functionality of the Refrigerant Detection System been verified? | ☐YES |

## 17.2. Ambient Temperature

| | |
|---|---|
| Ambient Dry Bulb Temperature _____°C/°F | Ambient Wet Bulb Temperature _____°C/°F |

## 17.3. Voltage

| L1-L2 | L2-L3 | L1-L3 | L1-Ground | L2-Ground | L3-Ground |
|---|---|---|---|---|---|
| | | | | | |

## 17.4. Supply Fan Assembly

| Alignment ☐ | | Check Rotation ☐ | Nameplate Amps_____ | |
|---|---|---|---|---|
| Number | hp | L1 Volts/Amps | Number | hp |
| 1 | | | 1 | |
| 2 | | | 2 | |
| VFD Frequency_____ | | VAV Controls_____ | | |

## 17.5. Energy Recovery Wheel Assembly

| Wheels Spin Freely ☐ | | Check Rotation ☐ | | FLA _____ |
|---|---|---|---|---|
| Number | hp | L1 Volts/Amps | L2 Volts/Amps | L3 Volts/Amps |
| 1 | | | | |

## 17.6. Dampers

| | | |
|---|---|---|
| OA Operation Check ☐ | Damper Wiring Check ☐ | Gears Check ☐ |
| RA Operation Check ☐ | Damper Wiring Check ☐ | Gears Check ☐ |
| EA Operation Check ☐ | Damper Wiring Check ☐ | Gears Check ☐ |
| Damper Actuator Type:_____ | | |
| Economizer Changeover Type and Operation:_____ | | |

## 17.7. Refrigeration System 1 - Cooling Mode

| | Pressure | Saturated Temperature | Line Temperature | Sub-cooling | Superheat |
|---|---|---|---|---|---|
| Discharge | | | | N/A | N/A |
| Suction | | | | N/A | |
| Liquid | | | | | N/A |

## 17.8. Refrigeration System 2 - Cooling Mode

| | Pressure | Saturated Temperature | Line Temperature | Sub-cooling | Superheat |
|---|---|---|---|---|---|
| Discharge | | | | N/A | N/A |
| Suction | | | | N/A | |
| Liquid | | | | | N/A |

## 17.9. Refrigeration System 3 - Cooling Mode

| | Pressure | Saturated Temperature | Line Temperature | Sub-cooling | Superheat |
|---|---|---|---|---|---|
| Discharge | | | | N/A | N/A |
| Suction | | | | N/A | |
| Liquid | | | | | N/A |

## 17.10. Refrigeration System 4 - Cooling Mode

| | Pressure | Saturated Temperature | Line Temperature | Sub-cooling | Superheat |
|---|---|---|---|---|---|
| Discharge | | | | N/A | N/A |
| Suction | | | | N/A | |
| Liquid | | | | | N/A |

## 17.11. Compressors/DX Cooling

| Check Rotation ☐ | | | | | | |
|---|---|---|---|---|---|---|
| Number | L1 Volts/Amps | L2 Volts/Amps | L3 Volts/Amps | Head Pressure KPA/PSIG | Suction Pressure KPA/PSIG | Crankcase Heater Amps |
| 1 | | | | | | |
| 2 | | | | | | |
| 3 | | | | | | |
| 4 | | | | | | |

## 17.12. Air-Cooled Condenser Fans

| Alignment ☐ | | Check Rotation ☐ | | Nameplate Amps_____ |
|---|---|---|---|---|
| Number | hp | L1 Volts/Amps | L2 Volts/Amps | L3 Volts/Amps |
| 1 | | | | |
| 2 | | | | |
| 3 | | | | |
| 4 | | | | |

## 17.13. Refrigeration System 1 - Heating Mode (Heat Pump Only)

| | Pressure | Saturated Temperature | Line Temperature | Sub-cooling | Superheat |
|---|---|---|---|---|---|
| Discharge | | | | N/A | N/A |
| Suction | | | | N/A | |
| Liquid | | | | | N/A |

## 17.14. Refrigeration System 2 - Heating Mode (Heat Pump Only)

| | Pressure | Saturated Temperature | Line Temperature | Sub-cooling | Superheat |
|---|---|---|---|---|---|
| Discharge | | | | N/A | N/A |
| Suction | | | | N/A | |
| Liquid | | | | | N/A |

## 17.15. Refrigeration System 3 - Heating Mode (Heat Pump Only)

| | Pressure | Saturated Temperature | Line Temperature | Sub-cooling | Superheat |
|---|---|---|---|---|---|
| Discharge | | | | N/A | N/A |
| Suction | | | | N/A | |
| Liquid | | | | | N/A |

## 17.16. Refrigeration System 4 - Heating Mode (Heat Pump Only)

| | Pressure | Saturated Temperature | Line Temperature | Sub-cooling | Superheat |
|---|---|---|---|---|---|
| Discharge | | | | N/A | N/A |
| Suction | | | | N/A | |
| Liquid | | | | | N/A |

## 17.17. Water/Glycol System

| | |
|---|---|
| 1. Has the entire system been flushed and pressure checked? | ☐YES |
| 2. Has the entire system been filled with fluid? | ☐YES |
| 3. Has air been bled from the heat exchangers and piping? | ☐YES |
| 4. Is the glycol the proper type and concentration (N/A if water)? | ☐YES |
| 5. Is there a minimum load of 50% of the design load? | ☐YES |
| 6. Has the water piping been insulated? | ☐YES |
| 7. What is the freeze point of the glycol (N/A if water)?_____ | ☐YES |

## 17.18. Electric Heating

| Stages_____ | | Limit Lockout ☐ | Aux. Limit Lockout ☐ |
|---|---|---|---|
| Stage | Amps | Stage | Amps |
| 1 | | 5 | |
| 2 | | 6 | |
| 3 | | 7 | |
| 4 | | 8 | |

## 17.19. Gas Heating

| | |
|---|---|
| 1. Does the unit include a shipped loose Heatco gas heater?<br>Refer to the provided Heatco IOM for all installation requirements. | ☐YES |

## 17.20. A2L Mitigation Board

| | |
|---|---|
| 1. Does each port (sensor 1–3) have a male connector plugged in on both the Cabinet and Airstream board? | ☐YES |
| 2.Do the compressor(s) and gas heat operation shut off when the Cabinet Board is in the alarm state? | ☐YES |
| 3. Does the unit operate normally except compressor and gas heat operation when the Cabinet Board is in the alarm state? | ☐YES |
| 4.Do the compressor(s) shut off and fan(s) stay on when the Airstream Board is in the alarm state? | ☐YES |
| 5. Does non-compressor or gas heating/cooling stay on when both A2L Mitigation boards are in the alarm state? | ☐YES |

# 18. APPENDIX A: UNIT SAFETY HIERARCHY

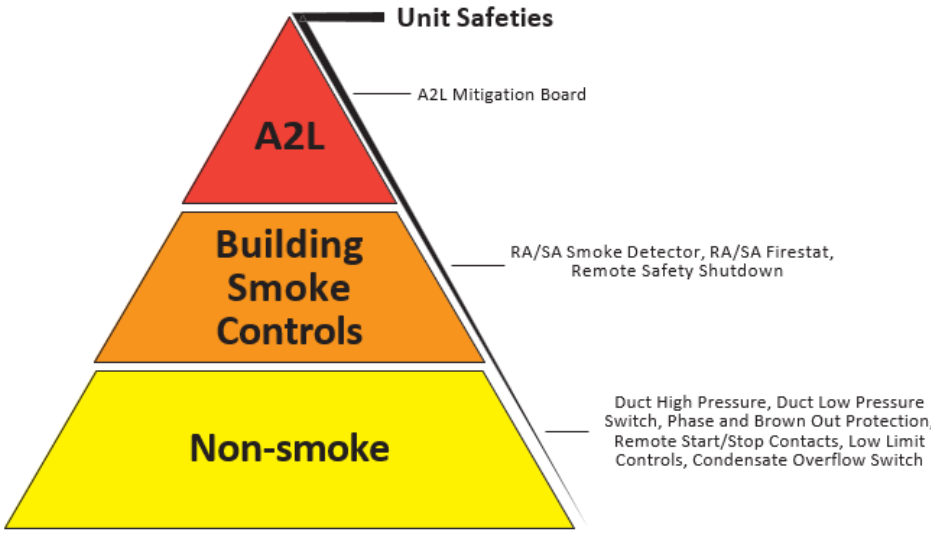


Figure 57: Unit Safety Hierarchy

**Default (A2L Priority)**

Units will ship with A2L sequences at the highest priority. This may activate the indoor blower in the event of an A2L leak, even if Building Smoke Controls or Non-smoke safeties interrupt the 24V/120V safety circuit. The terminal block labeled 'Hierarchy Control' will control the priority.

The jumper will connect 'Com' and 'A2L' for A2L priority.

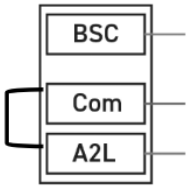


Figure 58: A2L Priority Jumper

**Building Smoke Control Priority**

Units will have the option to shift the Unit Safety Hierarchy in the field. To shift the priority, turn the power off to the unit and move the jumper to 'Com' and 'BSC' on the 'Hierarchy Control' terminals.

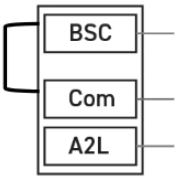


Figure 59: Building Smoke Control Priority Jumper

**Example Scenario**

If priority is given to Building Smoke Controls, and simultaneously both A2L and any of the Building Smoke Controls goes into alarm, the 24V/120V safety circuit will shut down the unit, and A2L mitigation will not take place.

*Locating the "Hierarchy Control" LVTB*

Locate the low voltage control section

Identify the 'Hierarchy Control' label by the (3) terminals labeled "BSC", "COM", and "A2L"

# 19. APPENDIX B: MAINTENANCE LOG

This log must be kept with the unit. It is the responsibility of the owner and/or maintenance/service contractor to document any service, repair or adjustments. AAON Service and Warranty Departments are available to advise and provide phone help for proper operation and replacement parts. The responsibility for proper startup, maintenance and servicing of the equipment falls to the owner and qualified licensed technician.

| Entry Date | Action Taken | Name/Tel. |
|---|---|---|
| | | |
| | | |
| | | |
| | | |
| | | |
| | | |
| | | |
| | | |
| | | |
| | | |
| | | |
| | | |
| | | |
| | | |
| | | |
| | | |
| | | |
| | | |
| | | |
| | | |
| | | |
| | | |
| | | |
| | | |
| | | |
| | | |
| | | |
| | | |
| | | |
| | | |
| | | |
| | | |
| | | |
| | | |
| | | |
| | | |

# 20. AAON E-COATED COIL MAINTENANCE RECORD

Installation Site: _____ Installation Date: _____

Unit Model #: _____ Unit Location: _____

Unit Serial #: _____ Customer: _____

| Year 20__ | Ambient Temp (°F) | Surface Debris Removed | Coil Cleaned | Approved Cleaner Used | Potable Water Backwash Rinse | Potable Water Frontwash Rinse | Chlorides Removed | Comments |
|---|---|---|---|---|---|---|---|---|
| JAN | | ☐ | ☐ | ☐ | ☐ | ☐ | ☐ | |
| FEB | | ☐ | ☐ | ☐ | ☐ | ☐ | ☐ | |
| MAR | | ☐ | ☐ | ☐ | ☐ | ☐ | ☐ | |
| APR | | ☐ | ☐ | ☐ | ☐ | ☐ | ☐ | |
| MAY | | ☐ | ☐ | ☐ | ☐ | ☐ | ☐ | |
| JUN | | ☐ | ☐ | ☐ | ☐ | ☐ | ☐ | |
| JUL | | ☐ | ☐ | ☐ | ☐ | ☐ | ☐ | |
| AUG | | ☐ | ☐ | ☐ | ☐ | ☐ | ☐ | |
| SEP | | ☐ | ☐ | ☐ | ☐ | ☐ | ☐ | |
| OCT | | ☐ | ☐ | ☐ | ☐ | ☐ | ☐ | |
| NOV | | ☐ | ☐ | ☐ | ☐ | ☐ | ☐ | |
| DEC | | ☐ | ☐ | ☐ | ☐ | ☐ | ☐ | |

The following cleaners have been approved for use on AAON E-Coated Coils to remove mold, mildew, dust, soot, greasy residue, lint, and similar particulates without harming the coated surfaces.

| Cleaning Agent | Reseller | Part Number |
|---|---|---|
| GulfClean ™ Coil Cleaner<br>Or<br>Enviro-Coil Cleaner | RectorSeal<br>2601 Spenwick Drive,<br>Houston, Texas 77055<br>(P): 713-263-8001 | G074480 / 80406<br>Or<br>V82540 |
| GulfClean Salt Reducer ™ | " " | G074480 / 80406 |

| Recommended Chloride Remover |
|---|
| RectorSeal<br>2601 Spenwick Drive, Houston, Texas 77055<br>(P): 713-263-8001 |

# 21. LITERATURE CHANGE HISTORY

**September 2022**

New H3 Series IOM.

**May 2023**

Added metric conversions equivalents in text and tables. Added new warning labels. Added safety statements. Added KAIC tables for fuse sizing. Removed gas heating information.

**October 2023**

Added statement 1 about V3 clearances tables. Added they must consider combustible and non-combustible surfaces. Add statement about PARTIAL UNIT AIR CONDITIONERS in section after warning boxes. Added statement in electric heat section about the tested min and max static pressures are between 0.2–4.0 inH2O.

**April 2024**

Additional warnings added. Text added to installation section about proper ventilation requirements. Minimum Floor Area for charge table added. Added “Refrigerant Detection System” for new mitigation board for A2L refrigerant. Additional checklist items added to Startup form. Sentence added to storage section in regard to ASHRAE 15 requirements. Added section about proper Refrigerant removal and Evacuation.

**July 2024**

Added text for UV lights and lamp replacement part number. Added text to the RDS section about the "COMP" relay if paired to a condensing unit.

**August 2024**

Added process of Decommissioning the unit. Added text to General Information stating the maximum installation elevation is 11,500 ft.

**September 2024**

Added details to the RDS text for the mitigation board operation.

**October 2024**

Created 454B part number. Added plenum fan gap tolerances to supply fan section.

**January 2025**

Updated decommissioning section. Updated RDS section, updated startup form. Updated warnings and caution section.

**November 2025**

Updated Heating section to reflect Heatco products. Updated Features B1,B2, 1A, 1B, 1C, 3, 8, 15, 19; added Unit Safety Hierarchy Appendix

**June 2026**

Updated Section 938 and 12.1. Added Figures 53-56.

**September 2026**

Updated Revision to “D”. Added “Install this appliance in accordance with local codes...” paragraph to Safety Section. Updated section 5.2; Updated temperatures in Table 14; removed information from 9.3 and 9.4; removed sections 9.8 and 9.9; removed tables 15, 16, 17, and 20; updated information in table 21. Updated start-up form information block from “address” to “Installed Address”.

2425 South Yukon Ave.

Tulsa, OK 74107-2728

Phone: 918-583-2266

Fax: 918-583-6094

www.AAON.com

SA Series

Installation, Operation, & Maintenance

G164870 · Rev. D · 20260918

AAON® is a subsidiary of The Aaon Group. It is the intent of The Aaon Group to provide accurate and current product information. However, in the interest of product improvement, The Aaon Group reserves the right to change pricing, specifications, and/or design of its product without notice, obligation, or liability.

Copyright © AAON®, all rights reserved throughout the world.

AAON® and AAONAIRE® are registered trademarks of The Aaon Group, Tulsa, OK.