V3 Series

Vertical Indoor Air Handling Units

R-454B

UL-60335

Installation, Operation & Maintenance

WARNING

QUALIFIED INSTALLER

Improper installation, adjustment, alteration, service or maintenance can cause property damage, personal injury or loss of life. Startup and service must be performed by a Factory Trained Service Technician competent in working with flammable refrigerants. A copy of this IOM must be kept with the unit.

WARNING

FOR YOUR SAFETY

Do not store or use gasoline or other flammable vapors and liquids in the vicinity of this or any other appliance.

WARNING

If the information in this manual is not followed exactly, a fire or explosion may result causing property damage, personal injury or loss of life.

Table of Contents

Safety **6**
V3 Series Feature String Nomenclature 13

General Information **19**
Certification of Steam or Hot Water Heat Models 19
Certification of Cooling Models 19
Codes and Ordinances 20
Receiving Unit 20
Storage 21
Wiring Diagrams 21

Installation **21**
Locating the Unit 21
Lifting and Handling the Unit 24
Unit Assembly 25
Control Box 27
Electrical 27
Duct Connection 31
Condensate Drain Pans 31
Condensate Drain Piping 31

Startup **32**
Filters 33
Supply Fans 33
Fan Air Flow Adjustment 33

Operation **34**
Refrigerant Detection System 34
Thermostat Operation 34
Split System DX Cooling Operation and Control 35
Chilled Water or Non-Compressorized DX Cooling Operation 35
Steam or Hot Water Preheating Operation 35

Maintenance **36**
DX Cooling 36
Condensate Drain Pans 36
Winterizing Coils 36
Supply Fans 36
E-Coated Coil Cleaning 37

Options **39**
Heating Coils 39
Chilled Water Coil 40
Direct Expansion (DX) Systems 41
Note: Low Ambient Operation 42
Evaporator Coil 42
Thermal Expansion Valve 42
Hot Gas Reheat 42
Hot Gas Bypass 43

Purge Circuit 43
Adjusting Refrigerant Charge 43
Energy Recovery Units 53
Polymer Wheel Set Purge Angle 54
Polymer Wheel Check Purge Seal 54
Polymer Wheel Air Seal Adjustments 55
Polymer Wheel to Air Seal Clearance 55
Polymer Wheel Startup 56
Aluminum Wheel Cleaning 57
Polymer Energy Recovery Cleaning 57
Polymer Wheel Segment Installation & Replacement 57
Polymer Wheel Air Seals 59
Polymer Wheel Drive Components 59
Polymer Wheel Drive Motor and Pulley Replacement 59
Polymer Wheel Belt Replacement 59
Electric Heating 63
Phase and Brownout Protection Module 64
DPM Setup Procedure 64
Default Set-up 64
Average Voltage Screen 65
Fault Words: 65
Filter Replacement 66
Replacement Parts 66
AAON 66

Filter Information 69

V3 Series Startup Form 73
Maintenance Log (E-Coated Coil) 78

Index of Tables and Figures

Tables

Table 1 - V3 Series Clearances (Metric) 22
Table 2 - V3 Series Clearances (Imperial) 22
Table 3 – Coil Removal Clearances 22
Table 4 - Nameplate Voltage Markings & Tolerances 27
Table 5 - Control Wiring 30
Table 6 – 35 KAIC Fuse Sizing 31
Table 7 – 65 KAIC Fuse Sizing 31
Table 8 - Drain Trap Dimensions (Metric) 32
Table 9 – Drain Trap Dimensions (Imperial) 32
Table 10 - Steam Distributing Coil Sweat Connection Sizes 40
Table 11 - Hot Water Coil Sweat Connection Sizes 40
Table 12 - Chilled Water Coil Sweat Connection Sizes 41
Table 13 - Minimum and Maximum Coil Pressures and Temperatures 41
Table 14 - Acceptable Refrigeration Circuit Values 44
Table 15 - Acceptable Microchannel Air-Cooled Condenser Coil Liquid Sub- Cooling Values (Metric) 45
Table 16 - Acceptable Microchannel Air-Cooled Condenser Coil Liquid Sub-Cooling Values (Imperial) 45
Table 17 - Minimum Circulation Airflow and Room Area for a Given Charge 48
Table 18 – V3 Max Charges 50
Table 19 - R-454B Refrigerant Temperature-Pressure Chart (Metric) 51
Table 20 – ASHRAE Classes of Air 61
Table 21 - Electric Heating Capacities 63
Table 22 - V3 Series A Cabinet Unit Filters 69
Table 23 - V3 Series B Cabinet Unit Filters 69
Table 24 - V3 Series C Cabinet Unit Filters 70
Table 25 – V3 Series D Cabinet Unit Filters 70
Table 26 – V3 Series E Cabinet Unit Filters 71
Table 27 - V3 Series A Cabinet Final Filters 71
Table 28 - V3 Series B Cabinet Final Filters 71
Table 29 - V3 Series C Cabinet Final Filters 71
Table 30 - V3 Series Energy Recovery OA Filters (Feature 13 = A-V) 72

Figures:

Figure 1 - Lockable Handle 21
Figure 2 - Minimum Clearance Required for Access to Unit (V3 Series plan view) 22
Figure 3 - V3 internal control panel with rear removable access panel shown 22
Figure 4 - Removable Internal Control Panel 23
Figure 5 - Supply Fan Access after removing control panel 23
Figure 6 - V3 Series Unit Orientation 24
Figure 7 - V3 Schematic with (1) Exhaust Fan, (2) Energy Recovery, (3) Air Handler 25
Figure 8 - Low & High Voltage Quick Connect 25
Figure 9 - Connect Sections 26
Figure 10 - Bar Clamp 26
Figure 11 - Flange Overlap 26
Figure 12 – Self-Tapping Screw 26

Figure 13 - Forklift Base Assembly 26
Figure 14 - Back View External Control Box 27
Figure 15 - External control box electrical connections 28
Figure 16 - V3 internal control panel electrical connections 28
Figure 17 - Drain Trap 32
Figure 18 - Typical wiring diagram with EC motor 33
Figure 19 - Shows the jumper that is to be removed (jumped between S1 and S2). 33
Figure 20 - Potentiometer 33
Figure 21 - Steam Distributing Piping 40
Figure 22- Hot & Chilled Water Piping 40
Figure 23 - TXV Bulb Position 42
Figure 24 - Hot Gas Purge Circuit 43
Figure 25 – Lifting Hole Locations 53
Figure 26 - Polymer Energy Recovery Wheel 54
Figure 27 - Wheel Segment Removal Pattern 58

G120680 · Rev. B · 240729
(ACP J000096)

Safety

Attention must be paid to the following statements:

NOTE - Notes are intended to clarify the unit installation, operation and maintenance.

⚠ **CAUTION** - Caution statements are given to prevent actions that may result in equipment damage, property damage, or personal injury.

⚠ **WARNING** - Warning statements are given to prevent actions that could result in equipment damage, property damage, personal injury or death.

⚠ **DANGER** - Danger statements are given to prevent actions that will result in equipment damage, property damage, severe personal injury or death.

⚠ WARNING

ELECTRIC SHOCK, FIRE OR EXPLOSION HAZARD

Failure to follow safety warnings exactly could result in dangerous operation, serious injury, death or property damage.

Improper servicing could result in dangerous operation, serious injury, death or property damage.

Installation and service must be performed by a qualified installer, service agency or the gas supplier.

- Before servicing, disconnect all electrical power to the unit. More than one disconnect may be provided.
- When servicing controls, label all wires prior to disconnecting. Reconnect wires correctly.
- Verify proper operation after servicing. Secure all doors with key-lock or nut and bolt.

⚠ CAUTION

WHAT TO DO IF YOU SMELL GAS

- Do not try to light any appliance.
- Shut off main gas supply.
- Do not touch any electrical switch.
- Do not use any phone in the building.
- Leave the building immediately.
- Immediately call your gas supplier from a neighbor's phone. Follow the gas supplier's instructions.
- If you cannot reach your gas supplier, call the fire department.

⚠ WARNING

Electric shock hazard. Before servicing, disconnect all electrical power to the unit, including remote disconnects, to avoid shock hazard or injury from rotating parts. Follow proper Lockout-Tagout procedures.

⚠ WARNING

FIRE, EXPLOSION OR CARBON MONOXIDE POISONING HAZARD

Failure to replace proper controls could result in fire, explosion or carbon monoxide poisoning. Failure to follow safety warnings exactly could result in serious injury, death or property damage. Do not store or use gasoline or other flammable vapors and liquids in the vicinity of this appliance.

⚠ CAUTION

Unit power supply wire must be only copper or aluminum.

⚠ WARNING

During installation, testing, servicing and troubleshooting of the equipment it may be necessary to work with live electrical components. Only a qualified licensed electrician or individual properly trained in handling live electrical components shall perform these tasks.

Standard NFPA-70E, an OSHA regulation requiring an Arc Flash Boundary to be field established and marked for identification of where appropriate Personal Protective Equipment (PPE) be worn, must be followed.

⚠ WARNING

ROTATING COMPONENTS

Unit contains fans with moving parts that can cause serious injury. Do not open door containing fans until the power to the unit has been disconnected and fan wheel has stopped rotating.

⚠ WARNING

GROUNDING REQUIRED

All field installed wiring must be completed by qualified personnel. Field installed wiring must comply with NEC/CEC, local and state electrical code requirements. Failure to follow code requirements could result in serious injury or death. Provide proper unit ground in accordance with these code requirements.

⚠ WARNING

UNIT HANDLING

To prevent injury or death lifting equipment capacity shall exceed unit weight by an adequate safety factor. Always test-lift unit not more than 61 centimeters (24 inches) inches high to verify proper center of gravity lift point to avoid unit damage, injury or death.

CAUTION

Failure to properly drain and vent coils when not in use during freezing temperature may result in coil and equipment damage.

CAUTION

Rotation must be checked on all MOTORS of 3 phase units at startup by a qualified service technician. Check fan motor rotation for proper operation. Alterations must only be made at the unit power connection.

WARNING

Do not use oxygen, acetylene or air in place of refrigerant and dry nitrogen for leak testing. A violent explosion may result causing injury or death.

WARNING

WATER PRESSURE

Prior to connection of condensing water supply, verify water pressure is less than maximum pressure shown on unit nameplate. To prevent injury or death due to instantaneous release of high pressure water, relief valves must be field supplied on system water piping.

WARNING

Always use a pressure regulator, valves and gauges to control incoming pressures when pressure testing a system. Excessive pressure may cause line ruptures, equipment damage or an explosion which may result in injury or death.

CAUTION

To prevent damage to the unit, do not use acidic chemical coil cleaners. Do not use alkaline chemical coil cleaners with a pH value greater than 8.5, after mixing, without first using an aluminum corrosion inhibitor in the cleaning solution.

WARNING

Some chemical coil cleaning compounds are caustic or toxic. Use these substances only in accordance with the manufacturer's usage instructions. Failure to follow instructions may result in equipment damage, injury or death.

CAUTION

Do not clean DX refrigerant coils with hot water or steam. The use of hot water or steam on refrigerant coils will cause high pressure inside the coil tubing and damage to the coil.

⚠ CAUTION

Door compartments containing hazardous voltage or rotating parts are equipped with door latches to allow locks. Door latch are shipped with nut and bolts requiring tooled access. If you do not replace the shipping hardware with a pad lock always re-install the nut & bolt after closing the door.

⚠ WARNING

Do not work in a closed area where refrigerant or nitrogen gases may be leaking. A sufficient quantity of vapors may be present and cause injury or death.

⚠ WARNING

Never attempt to open an access door or remove a panel while the unit is running. Pressure in the unit can cause excessive force against the panel.

⚠ WARNING

Do not weld or cut foam panel with plasma cutters or a cutting torch – When burnt the foam produces dangerous fumes.

⚠ WARNING

Ensure that sufficient dampers will be open to provide air path before fan is allowed to run.

⚠ CAUTION

PVC (Polyvinyl Chloride) and CPVC (Chlorinated Polyvinyl Chloride) are vulnerable to attack by certain chemicals. Polyester (POE) oils used with R-454B and other refrigerants, even in trace amounts, in a PVC or CPVC piping system will result in stress cracking of the piping and fittings and complete piping system failure.

⚠ WARNING

This appliance is not intended for use by persons with reduced physical, sensory or mental capabilities, or lack of experience and knowledge, unless they have been given supervision or instruction concerning use of the appliance by a person responsible for their safety. Children must be supervised to ensure they do not play with this appliance.

⚠ CAUTION

In order to avoid a hazard due to inadvertent resetting of the THERMAL CUT-OUT, this appliance must not be supplied through an external switching device, such as a timer, or connected to a circuit that is regularly switched on and off by the utility.

WARNING

Units with VFD driven motors/compressors have adjustable overload settings. These are set by the AAON factory for the protection of these motors/compressors and must not be adjusted over this factory setpoint or bypassed.

WARNING

Connected ductwork must be free of potential ignition sources, such as hot surfaces above 700 ºC (1292 ºF) or electrical devices prone to arcing or sparking. Potential ignition sources within the ductwork may only be allowed if the minimum air velocity across these components is above 1 m/s (200 ft/min) during any point which the component can function.

WARNING

This appliance contains a flammable refrigerant. Minimum floor area on nameplate is based on factory charge at a ceiling/release height of 2.2 m (7.2 ft) in accordance with UL 60335-2-40. Refer to Table 17 for different allowable room areas based on other charges and ceiling/release heights.

WARNING

Refrigerant Detection System activated circulation airflow. In the event of refrigerant leak within airstream, indoor blower is activated to provide circulation airflow. Mitigation board provided with alarm output. Wire all zone dampers and VAV boxes to alarm output to open in the event of a refrigerant leak alarm.

WARNING

Only auxiliary devices approved by manufacturer or declared suitable with the refrigerant may be installed in ductwork.

WARNING

Minimum circulation airflow is required to prevent stagnation of refrigerant in the event of a refrigerant leak. Zone dampers and VAV boxes must be operated to allow for minimum circulation airflow in the event of a refrigerant leak.

WARNING

Do not use torch or other potential ignition source to detect refrigerant leaks. Use only electronic detector suitable for the refrigerant, or bubble method with chlorine free detergent.

WARNING

If refrigerant leak is detected, remove/extinguish all sources of open flame. If repairing refrigerant leak requires brazing, remove all refrigerant before beginning brazing.

WARNING

Do not use means to accelerate the defrosting process or to clean, other than those recommended in this manual.

WARNING

Flammable refrigerant. Be aware that refrigerant does not contain an odor.

⚠ WARNING

The appliance shall be stored in a room without continuously operating ignition sources (i.e. open flames, an operating gas appliances or operating electric heater).

⚠ WARNING

Ensure that there are no live electrical components or wiring exposed when adjusting charge, recovering charge, or purging the system. Ensure that earthing continuity is unbroken.

⚠ CAUTION

If an electrical component requires changing, verify specifications and intended application match the component to be replaced. Electrical components must be free from producing arcs or sparks. The maintenance guidelines in this manual must always be followed. If in doubt, contact Factory Technical Support.

⚠ WARNING

The appliance shall be stored in a room without continuously operating ignition sources (i.e. open flames, an operating gas appliances or operating electric heater).

⚠ WARNING

If this appliance is installed to serve a conditioned area less than the minimum area as indicated in Table 17, the served space must be free of continuously operating open flames or other sources of ignition. Additional ventilation is required in accordance with ASHRAE 15.

1. Startup and service must be performed by a Factory Trained Service Technician competent in working with flammable refrigerants.

2. The unit is for indoor use only. See General Information section for more unit information.

3. The supply and return air ducts must be derived from the same space. It is recommended ducts be provided with access panels to allow inspection for duct tightness.

4. For ducted applications, supply and return must be ducted directly to the space served by the unit. If plenum return is to be utilized, the return plenum must be provided with a refrigerant detection system or ventilation in accordance with ASHRAE 15 requirements.

5. These units must not be used for heating or cooling at any time during any phase of construction. Very low return air temperatures, harmful vapors, and misplacement of the filters will damage the unit and its efficiency.

6. Clean duct and components upon completion of the construction setup.

7. Every unit has a unique equipment nameplate with electrical, operational, and unit clearance specifications. Always refer to the unit nameplate for specific ratings unique to the model you have purchased.

8. When pairing with a condensing unit, ensure the refrigerant pressures for the paired system do not exceed the maximum allowable pressures listed on the unit nameplate.

9. Ensure that the unit is paired only with a condensing unit compatible with refrigerant marked on the nameplate.

10. "The V3 is a PARTIAL UNIT AIR CONDITIONER, complying with PARTIAL UNIT requirements of UL 60335-2-40, and must only be connected to other units that have been confirmed as complying to corresponding PARTIAL UNIT requirements of UL 60335-2-40/ CSA C22.2 No. 60335-2-40, or UL 1995/ CSA C22.2 No 236.

11. READ THE ENTIRE INSTALLATION, OPERATION AND MAINTENANCE MANUAL. OTHER IMPORTANT SAFETY PRECAUTIONS ARE PROVIDED THROUGHOUT THIS MANUAL.

12. Keep this manual and all literature safeguarded near or on the unit.

V3 Series Feature String Nomenclature

Model Options : Unit Feature Options

GEN	SIZE	ORENT	MJREV	VLT	CORR	A1	A2	A3	A4	B1	B2	B3	1A	1B	1C	1D	2	3	4	5A	5B	5C	6A	6B	6C	7	8	9	10	11	12	13	14A	14B
V3 -	B	R	B -	2 -	0 -	2	6	H	A -	1	1	H	: A	A	B	H -	0	A	A -	F	F	B -	0	A	0 -	0	0	0	0	0	0	0	0	0
																										0	0	0	0	0	B	0	0	0
																										15	16	17	18	19	20	21	22	23

BASE MODEL

SERIES AND GENERATION

V3 = Horizontal - Back Intake, Front Discharge

UNIT SIZE

A = Up to 1,200 cfm
B = Up to 2,000 cfm
C = Up to 4,000 cfm
D = Up to 6,000 cfm
E = Up to 10,000 cfm

UNIT ORIENTATION

R = Right Hand Connections
L = Left Hand Connections

REVISION

B = Second Revision

VOLTAGE

1 = 230V/1Φ/60Hz
2 = 230V/3Φ/60Hz
3 = 460V/3Φ/60Hz
4 = 575V/3Φ/60Hz
8 = 208V/3Φ/60Hz
9 = 208V/1Φ/60Hz

CORROSION PROTECTION

0 = None
A = Interior Corrosion Protection

Model Option A: COOLING

A1: COOLING TYPE

0 = No Cooling
1 = R-410A DX Cooling
2 = Chilled Water Cooling
4 = R-454B DX Cooling

A2: COOILNG ROWS

0 = No Cooling
4 = 4 Row Coil
6 = 6 Row Coil
8 = 8 Row Coil

A3: COOLING STAGES

0 = No Cooling
1 = Single Circuit
2 = Two Circuits - Interlaced Coil
D = Double Serpentine
F = Single Serpentine
H = Half Serpentine
Q = Quarter Serpentine

A4: COOLING FPI

0 = No Cooling
A = 10 fpi
B = 8 fpi
C = 12 fpi
D = 14 fpi

V3 Series Feature String Nomenclature

Model Options : Unit Feature Options

GEN	SIZE	ORENT	MJREV	VLT	CORR	A1	A2	A3	A4	**B1**	**B2**	**B3**	**1A**	**1B**	**1C**	**1D**	2	3	4	5A	5B	5C	6A	6B	6C	7	8	9	10	11	12	13	14A	14B
V3	- B	R	B	- 2	- 0	- 2	6	H	A	**- 1**	**1**	**H :**	**A**	**A**	**B**	**H**	- 0	A	A	- F	F	B	- 0	A	0	- 0	0	0	0	0	0	0	0	0

15	16	17	18	19	20	21	22	23
0	0	0	0	0	B	0	0	0

Model Option B: HEATING

B1: HEATING TYPE

0 = No Heating
1 = Hot Water
4 = Steam Distributing
6 = Hot Water (Reheat Position)
3 = Electric Heat
7 = Electric Heat (UL 60335 Compliant)

B2: HEATING DESIGNATION

0 = No Heating
1 = 1 Row Coil
2 = 2 Row Coil
A = 7 kW (5.3 kW @ 208V)
B = 14 kW (10.5 kW @ 208V)
C = 21 kW (15.8 kW @ 208V)
D = 28 kW (21.0 kW @ 208V)
E = 35 kW (26.3 kW @ 208V)
F = 42 kW (31.5 kW @ 208V)
G = 49 kW (37.0 kW @ 208V)
H = 56 kW (42.0 kW @ 208V)
J = 63 kW (47.3 kW @ 208V)
K = 70 kW (52.5 kW @ 208V)
M = 84 kW (63.0 kW @ 208V)

B3: HEATING STAGES

0 = No Heating
1 = 1 Stage
2 = 2 Stage
3 = 3 Stage
4 = 4 Stage
5 = 5 Stage
6 = 6 Stage
S = Modulating/SCR Electric
F = Single Serpentine 12 fpi
H = Half Serpentine 12 fpi
Q = Quarter Serpentine 12 fpi
K = Single Serpentine 8 fpi
L = Half Serpentine 8 fpi
M = Quarter Serpentine 8 fpi
N = Single Serpentine 10 fpi
P = Half Serpentine 10 fpi
R = Quarter Serpentine 10 fpi

Feature 1: SUPPLY FAN

1A: SUPPLY AIR BLOWER CONFIGURATION

A = 1 Blower + 1 High Efficiency EC Motor
C = Option A + Piezo Ring
E = 1 Blower + 1 Perm Magnet AC TEFC Motor + 1 VFD

1B: SUPPLY AIR BLOWER

A = 310 mm Direct Drive BC Plenum Fan
B = 355 mm Direct Drive BC Plenum Fan
C = 450 mm Direct Drive BC Plenum Fan
D = 250 mm Direct Drive BC Plenum Fan
E = 13.5" Backward Curved Plenum, 50% Width
F = 13.5" Backward Curved Plenum, 70% Width
G = 15" Backward Curved Plenum , 70% Width
H = 22" Backward Curved Plenum, 70% Width
1 = 15" Backward Curved Plenum
2 = 15" Backward Curved Plenum, 50% Width
3 = 18.5" Backward Curved Plenum
4 = 18.5" Backward Curved Plenum, 70% Width

1C: SUPPLY AIR BLOWER MOTOR

A = 500 W (0.67 hp)
B = 1.0 kW (1.34 hp)
C = 1.7 kW (2.28 hp)
D = 3.0 kW (4.02 hp)
E = 6.0 kW (8.00 hp)
F = 800 W (1.07 hp)
1 = 1 hp
2 = 2 hp
3 = 3 hp
4 = 5 hp

1D: SUPPLY BLOWER CONTROL/CONTROL VENDORS

C = Field Installed Controls by Others
D= Field Installed Controls by Others + Isolation Relays
E = VCC-X Orion Controls System

V3 Series Feature String Nomenclature

Model Options : Unit Feature Options

GEN	SIZE	ORENT	MJREV	VLT	CORR	A1	A2	A3	A4	B1	B2	B3	1A	1B	1C	1D	**2**	**3**	**4**	**5A**	**5B**	**5C**	6A	6B	6C	7	8	9	10	11	12	13	14A	14B
V3	-	B	R	B	-	2	-	0	-	2	6	H	A	-	1	1	H	:	A	A	B	H	-	**0**	**A**	**A**	**-**	**F**	**F**	**B**	-	0	A	0

15	16	17	18	19	20	21	22	23
0	0	0	0	0	B	0	0	0

Feature 2: REFRIGERATION OPTIONS

0 = Standard
A = Single Circuit External Hot Gas Bypass
B = Dual Circuit External Hot Gas Bypass
C = Heat Pump
D = Option B + H
F = Options C + H
H = Modulating Hot Gas Reheat
P = Option H (Circuit 1) + Option A (Circuit 2)
R = Option C + A
S = Option C + B
T = Option C + H + A
U = Option C + H + B

Feature 3: SPECIAL CONTROLS

0 = Standard - None
A = Constant Volume Controller - CV Cool + CV Heat
C = VAV Controller - VAV Cool + CV Heat
E = Make Up Air Controller - CV Cool + CV Heat

Feature 4: ADDITIONAL CONTROLS 1

0 = Standard - None
A = Phase and Brownout Protection
B = Return and Supply Air Firestat
C = Return Air Smoke Detector
D = Options A + B
E = Options A + C
F = Options B + C
G = Options A + B + C
H = Remote Safety Shutdown Terminals
J = Energy Recovery Wheel Rotation Detection
K = Options A + H
L = Options A + J
M = Options B + H
N = Options B + J
P = Options C + H
Q = Options C + J
R = Options H + J
S = Options A + B + H
T = Options A + B + J
U = Options A + C + H
V = Options A + C + J
W = Options A + H + J
Y = Options B + C + H

Feature 4: ADDITIONAL CONTROLS 1 Continued

Z = Options B + C + J
1 = Options B + H + J
2 = Options C + H + J
3 = Options A + B + C + H
4 = Options A + B + C + J
5 = Options A + B + H + J

Feature 5: MIXING BOX

5A: RETURN AIR DAMPER POSITION

0 = Standard - None
F = Front
L = Left Hand (Front OA Damper Required)
R = Right Hand (Front OA Damper Required)
T = Top (Front OA Damper Required)

5B: OUTSIDE AIR DAMPER POSITION

0 = Standard - None
F = Front
L = Left Hand (Front RA Damper Required)
R = Right Hand (Front RA Damper Required)
T = Top (Front RA Damper Required)

5C: MIXING BOX DAMPER CONTROL

0 = Standard - None
A = 2 Position Actuators (24V)
B = Fully Modulating Actuators (DDC)
C = Fixed Position Dampers
D = Fully Modulating Actuator - Enthalpy Limit
E = Fully Modulating Actuator - Sensible Limit

V3 Series Feature String Nomenclature

Model Options : Unit Feature Options

GEN	SIZE	ORENT	MJREV	VLT	CORR	A1	A2	A3	A4	B1	B2	B3	1A	1B	1C	1D	2	3	4	5A	5B	5C	**6A**	**6B**	**6C**	**7**	**8**	**9**	**10**	**11**	12	13	14A	14B
V3	- B	R	B -	2	- 0	-	2	6	H	A	-	1	1	H	:	A	A	B	H	- 0	A	A -	F	F	B -	**0**	**A**	**0**	**-**	**0**	**0**	**0**	**0**	**0**	0	0	0	0
																										0	0	0	0	0	0	B	0	0	0
																										15	16	17	18	19	20	21	22	23	

Feature 6: FILTER BOX

6A: PRE FILTER BOX

0 = Standard - None
A = 2” Pleated - MERV 8
B = 4” Pleated - MERV 8
C = 4” Pleated - MERV 11
D = 4” Pleated - MERV 13
E = 4” Pleated - MERV 14
F = 2” Pleated - MERV 8 + 4” Pleated - MERV 8
G = 2” Pleated - MERV 8 + 4” Pleated - MERV 11
H = 2” Pleated - MERV 8 + 4” Pleated - MERV 13
J = 2” Pleated - MERV 8 + 4” Pleated - MERV 14

6B: UNIT FILTER

0 = Standard - None
A = 2” Pleated - MERV 8
B = 4” Pleated - MERV 8
C = 4” Pleated - MERV 11
D = 4” Pleated - MERV 13
E = 4” Pleated - MERV 14
F = 2” Pleated - MERV 8 + 4” Pleated - MERV 8
G = 2” Pleated - MERV 8 + 4” Pleated - MERV 11
H = 2” Pleated - MERV 8 + 4” Pleated - MERV 13
J = 2” Pleated - MERV 8 + 4” Pleated - MERV 14

6C: FINAL FILTER BOX

0 = Standard - None
H = 4” Pleated - MERV 8
J = 4” Pleated - MERV 11
K = 4” Pleated - MERV 13
L = 4” Pleated - MERV 14

Feature 7: FILTER OPTIONS

0 = Standard - None
A = Magnehelic Gauge
B = Clogged Filter Switch
C = Options A + B
D = Magnehelic Gauge - Unit Filter + ERW Filter
F = Clogged Filter Switch - Unit Filter + ERW Filter
G = Options D + F

Feature 8: COIL COATING

0 = Standard - None
A = E-coated Cooling and Heating Coils
B = Copper Finned Coils + Stainless Steel Coil Casing
D = Stainless Steel Coil Casing
E = Options A + D

Feature 9: EXPANSION VALVE

0 = None
A = Thermal Expansion Valves

Feature 10: EXPANSION VALVE CONTROLS

0 = None
A = Standard Control

Feature 11: EXTERNAL PAINT

0 = Standard - None
A = AAON Gray Paint
B = Special Paint

V3 Series Feature String Nomenclature

Model Options : Unit Feature Options

GEN	SIZE	ORENT	MJREV	VLT	CORR	A1	A2	A3	A4	B1	B2	B3	1A	1B	1C	1D	2	3	4	5A	5B	5C	6A	6B	6C	7	8	9	10	11	**12**	**13**	**14A**	**14B**	**15**	**16**	17	18	19	20	21	22	23
V3	B	R	B	2	0	2	6	H	A	1	1	H	A	A	B	H	0	A	A	F	F	B	0	A	0	0	0	0	0	0	**0**	**0**	**0**	**0**	**0**	**0**	0	0	0	B	0	0	0

Feature 12: TONNAGE

0 = Standard - None
A = 2 ton Capacity
B = 3 ton Capacity
C = 4 ton Capacity
D = 5 ton Capacity
E = 6 ton Capacity
F = 7 ton Capacity
G = 8 ton Capacity
U = 9 ton Capacity
H = 10 ton Capacity
V = 11 ton Capacity
W = 13 ton Capacity
J = 14 ton Capacity
Y = 15 ton Capacity
Z = 16 ton Capacity
K = 17 ton Capacity
1 = 18 ton Capacity
2 = 20 ton Capacity
L = 22 ton Capacity
M = 25 ton Capacity
3 = 26 ton Capacity
N = 30 ton Capacity
P = 31 ton Capacity
Q = 34 ton Capacity
R = 40-45 ton Capacity
S = 50-55 ton Capacity
4 = 60 ton Capacity
T = 63 ton Capacity
5 = 70 ton Capacity

Feature 13: ENERGY RECOVERY TYPE

0 = Standard - None
A = Energy Recovery Wheel - Total + High CFM, Polymer
C = Energy Recovery Wheel - Total + High CFM, 1% Purge, Polymer
E = Energy Recovery Wheel - Sensible + High CFM, Polymer
G = Energy Recovery Wheel - Sensible + High CFM, 1% Purge, Polymer

Feature 13: ENERGY RECOVERY TYPE (Continued)

J = Energy Recovery Wheel - Total + High CFM, Aluminum
L = Energy Recovery Wheel - Total + High CFM, 1% Purge, Aluminum

Feature 14: POWER

14A: POWER OPTIONS

0 = Standard - Power Block

14B: ELECTRICAL RATING

0 = Standard - 5kAIC
J = 10 kAIC

Feature 15: CONTROL PANEL

0 = Internal Control Panel (Front Supply Blower Access Required)
B = Medium Control Panel - 25” x 22”
C = Large Control Panel - 48” x 22”
D = Removable Internal Control Panel (Single Side Access)

Feature 16: SHIPPING SPLITS

0 = Standard - None
A = 1 Shipping Split (2 pallets)
B = 2 Shipping Splits (3 pallets)
C = 3 Shipping Splits (4 pallets)
D = 4 Shipping Splits (5 pallets)
E = 5 Shipping Splits (6 pallets)
H = Special Shipping Split (SPA Required)

V3 Series Feature String Nomenclature

Model Options : Unit Feature Options

GEN	SIZE	ORENT	MJREV	VLT	CORR	A1	A2	A3	A4	B1	B2	B3	1A	1B	1C	1D	2	3	4	5A	5B	5C	6A	6B	6C	7	8	9	10	11	12	13	14A	14B
V3 -	B R	B -	2 -	0 -	2 6	H A	-	1 1	H :	A A	B H	- 0	A A	- F	F B	- 0	A 0	- 0	0 0	0 0	0 0	0 0											
																										0	0	**0**	**0**	**0**	**B**	**0**	**0**	**0**
																										15	16	**17**	**18**	**19**	**20**	**21**	**22**	**23**

Feature 17: ENERGY RECOVERY CABINET

0 = Standard - None
A = Top RA + Back EA + Back OA Connections
G = OA + EA Dampers - Top RA + Back EA + Back OA Connections
N = OA + Economizer Dampers - Top RA + Back EA + Back Connections
U = OA + EA + Economizer Dampers - Top RA + Back EA + Back OA Connections

Feature 18: PREHEAT

0 = Standard - None

Feature 19: EXHAUST FAN

0 = Standard - None
A = 250 mm Exhaust Fan, 800 W EC Motor
B = 310 mm Exhaust Fan, 1.0 kW EC Motor
C = 310 mm Exhaust Fan, 1.7 kW EC Motor
D = 355 mm Exhaust Fan, 1.7 kW EC Motor
E = 450 mm Exhaust Fan, 3.0 kW EC Motor
F = 450 mm Exhaust Fan, 6.0 kW EC Motor
G = Dual 310 mm Exhaust Fan, 1.0 kW EC Motor
H = Dual 310 mm Exhaust Fan, 1.7 kW EC Motor
J = Dual 355 mm Exhaust Fan, 1.7 kW EC Motor
K = Dual 450 mm Exhaust Fan, 3.0 kW EC Motor
L = Dual 450 mm Exhaust Fan, 6.0 kW EC Motor
M = Option A + Piezo Ring
N = Option B + Piezo Ring
P = Option C + Piezo Ring
Q = Option D + Piezo Ring
R = Option E + Piezo Ring
S = Option F + Piezo Ring
T = Option G + Piezo Rings
U = Option H + Piezo Rings
V = Option J + Piezo Rings
W = Option K + Piezo Rings
Y = Option L + Piezo Rings

Feature 20: CRATING

0 = Standard - None
A = Export Crating
B = Forkliftable Base - 5” Base
C = Options A + E
D = Options A + B
E = Shipping Shrink Wrap
F = Options B + E
G = Options A + B + E

Feature 21: ADDITIONAL CONTROLS 2

0 = Standard - None
D = High Condensate Level Switch

Feature 22: WARRANTY

0 = Standard - 1 Year Parts
A = 2 Year Parts Only Warranty (Begins at Date of Shipment)
B = 3 Year Parts Only Warranty (Begins at Date of Shipment)
C = 4 Year Parts Only Warranty (Begins at Date of Shipment)
D = 5 Year Parts Only Warranty (Begins at Date of Shipment)

Feature 23: TYPE

0 = Standard
X = Special Pricing Authorization

General Information

AAON® V3 Series indoor air handling units have been designed for indoor installation only. Units are assembled, wired, charged with dry nitrogen and run-tested at the factory. V3 Series units are not intended for residential use. Startup and service must be performed by a Factory Trained Service Technician.

⚠ WARNING

Improper installation, adjustment, alteration, service or maintenance can cause property damage, personal injury or loss of life. Startup and service must be performed by a Factory Trained Service Technician. A copy of this IOM must be kept with the unit.

⚠ CAUTION

These units must not be used for heating or cooling at any time during any phase of construction. Very low return air temperatures, harmful vapors, and misplacement of the filters will damage the unit and its efficiency.

Certification of Steam or Hot Water Heat Models

a. Certified as a forced air heating system with or without cooling.
b. Certified for indoor installation only.

⚠ CAUTION

This equipment is protected by a standard limited warranty under the condition that initial installation, service, startup and maintenance is performed according to the instructions set forth in this manual. This manual must be read in its entirety prior to installation and before performing any service or maintenance work.

Equipment described in this manual is available with many optional accessories. If you have questions after reading this manual in its entirety, consult other factory documentation or contact your AAON Sales Representative to obtain further information before manipulating this equipment or its optional accessories

Certification of Cooling Models

a. Certified as a commercial central air conditioner with or without electrically operated compressors.
b. Certified for indoor installation only.
c. Certified with refrigerant R-454B coils or with chilled water cooling coils.

Codes and Ordinances
V3 Series units have been tested and certified, by ETL, in accordance with UL Safety Standard 60335-2-40 4th Edition, ANSI Safety Standard Z21.47-2016.

V3 Series units are rated:
- IEC 60529 IPX0
- UL 60335-2-40 Class I Appliance

Size system in accordance with the American Society of Heating, Refrigeration and Air Conditioning Engineers Handbook.

Installation of V3 Series units must conform to the following codes:
- International Mechanical Code (IMC 2018 where revision not specified by State)
- Installation of Air Conditioning and Ventilating Systems Standard (NFPA 90A)
- National Electrical Code (NFPA 70)

Additional conditions for installation outside of these codes may be required for any region, state and/or city within the United States of America. It is the responsibility of the building system designer, installing contractor and person(s) responsible for the operation and maintenance of the AAON equipment to know and adhere to International and local code requirements in conjunction with the requirements of this document.

⚠ CAUTION

The Clean Air Act of 1990 bans the intentional venting of refrigerant as of July 1, 1992. Approved methods of recovery, recycling, or reclaiming must be followed.

⚠ WARNING

Coils and sheet metal surfaces present sharp edges and care must be taken when working with equipment.

Receiving Unit
When received, check the unit for damage that might have occurred in transit. If damage is found it must be noted on the carrier's Freight Bill. A request for inspection by carrier's agent must be made in writing at once.

Check nameplate to ensure the correct model sizes and voltages have been received to match the job requirements.

If repairs must be made to damaged goods, notify the factory before any repair action is taken in order to protect the warranty. Certain equipment alteration, repair, and manipulation of equipment without the manufacturer's consent may void the product warranty. Contact the AAON Technical Support for assistance with handling damaged goods, repairs, and freight claims: (918) 382-6450.

Note: Upon receipt check shipment for items that ship loose such as remote sensors. Consult order and shipment documentation to identify potential loose-shipped items.

⚠ WARNING

Failure to observe the following instructions will result in premature failure of your system and possible voiding of the warranty.

Loose-shipped items may have been placed inside unit cabinet for security. Secure all doors with locks or nuts and bolts to prevent unauthorized access.

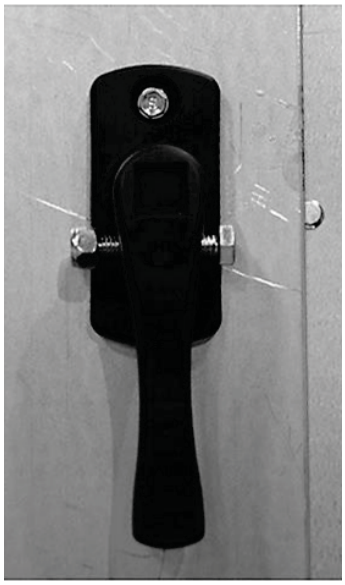

Figure 1 - Lockable Handle

Storage

This equipment is not suitable for outdoor use of storage. If installation will not occur immediately following delivery, store equipment in a dry protected area away from construction traffic and in the proper orientation as marked on the packaging with all internal packaging in place. Secure all loose-shipped items. Unit must be stored in accordance with ASHRAE 15 requirements for machine rooms.

Wiring Diagrams

Unit specific wiring diagrams are laminated and affixed inside the controls compartment door.

Allow adequate space for piping access and panel removal. **To ensure proper access for field service, maintain minimum clearances for field piping and other obstructions as indicated by Table 1 and Table 2.** Consult local building codes for additional service clearance requirements.

Installation

AAON equipment has been designed for quick and easy installation. Startup and service must be performed by Factory Trained Service Technician.

The V3 unit can either be shipped assembled or shipped in sections. See the Unit Assembly section of this document for instructions on assembling the sections. If unit is to be installed indoors, or in areas without sufficient ventilation, provide venting from all pressure relief outlets to outdoors in accordance with ASHRAE 15 requirements.

Locating the Unit

Placement of the unit relative to ductwork, electrical and plumbing must be carefully considered. Return air plenum or duct can be mounted directly to the return air flanges. Use flexible gasket material to seal the duct to the unit.

Verify floor, foundation or suspension support can support the total unit weight, including accessory weights. Unit must be level in both horizontal axes to support the unit and reduce noise and vibration from the unit.

For units with supplementary electric heat installed with free air discharge, the supply air discharge opening must be located a minimum of 1.83 meters (6 feet) above the finished floor.

Table 1 - V3 Series Clearances (Metric)

Unit Size	Access Side Clearance (dimension X on Figure 2)[2]	Opposite access side[3]	Front or Back[3]
V3-**A**	91 cm	15 cm	15 cm
V3-**B**			
V3-**C**			
V3-**D**			
V3-**E**			

Table 2 - V3 Series Clearances (Imperial)

Unit Size	Access Side Clearance (dimension X on Figure 2)[2]	Opposite access side[3]	Front or Back[3]
V3-**A**	36 inches	6 inches	6 inches
V3-**B**			
V3-**C**			
V3-**D**			
V3-**E**			

1. Values in table apply to both combustible and non-combustible surfaces.
2. Additional clearance may be required to allow for coil removal. See Table 3
3. May be installed flush depending upon local codes.

Table 3 – Coil Removal Clearances

Unit Size	Access Side	
V3-**A**	0.8 m	2.7 ft
V3-**B**	0.8 m	2.7 ft
V3-**C**	1.1 m	3.7 ft
V3-**D**	1.5 m	4.8 ft
V3-**E**	1.5 m	4.8 ft

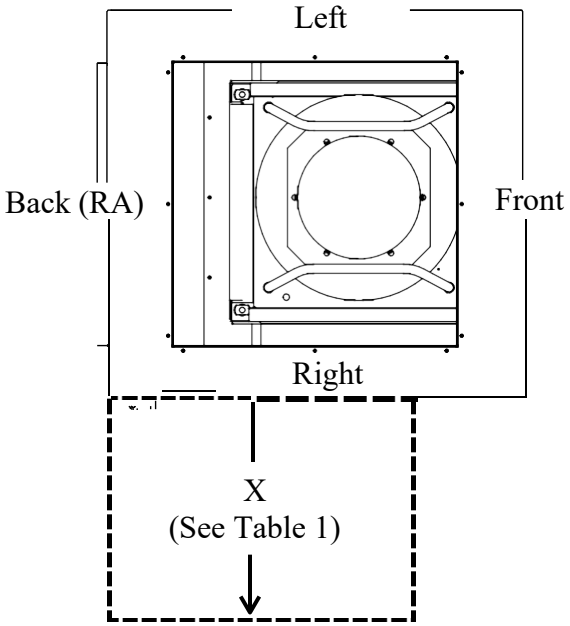

Figure 2 - Minimum Clearance Required for Access to Unit (V3 Series plan view)

Internal Control Panel

V3 units with internal control panel have removable access panels on the front and back of the supply fan section. V3 units that have energy recovery only have one removable access panel on the front of the unit. The supply flanges can be interchanged with the access panels if necessary as the openings have the same dimensions.

Figure 3 - V3 internal control panel with rear removable access panel shown

Removable Internal Control Panel

V3 units with removable internal control panel have a removable access panel on the access side of the unit. Removing the electrical panel gives access to the supply fan. To access the supply fan, disconnect the wiring that connects from the unit to the removable control panel. Then remove the four corner bolts and use the handles to remove the electrical panel.

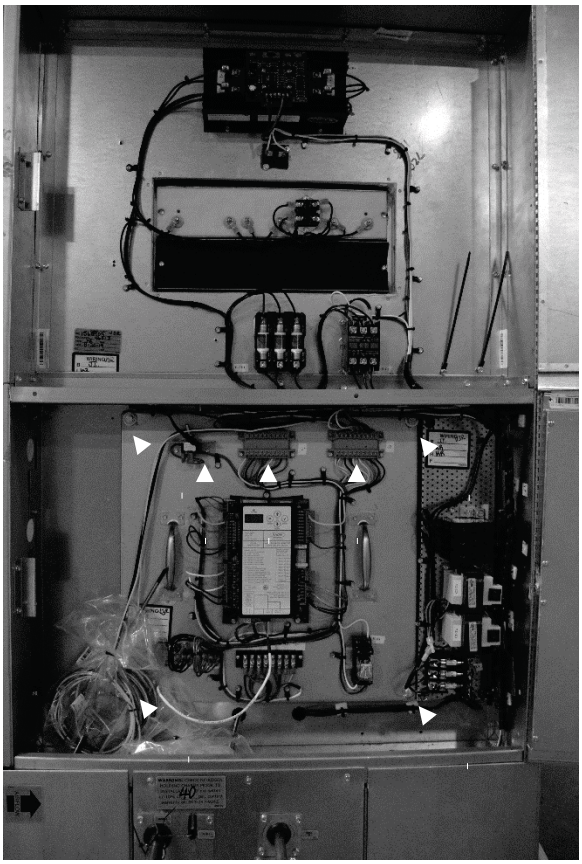

Figure 4 - Removable Internal Control Panel

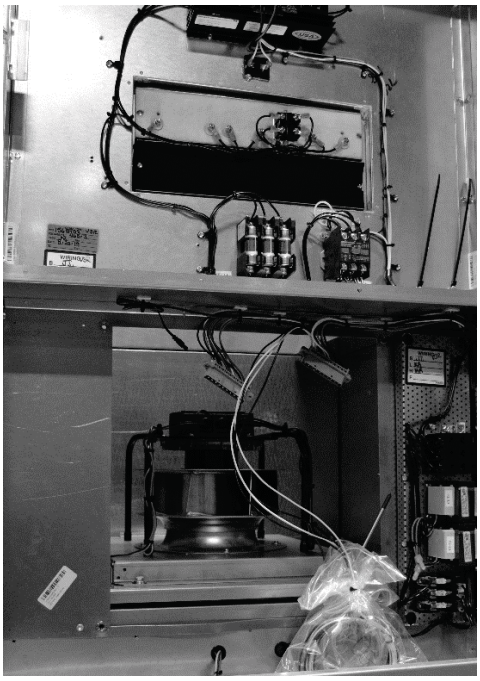

Figure 5 - Supply Fan Access after removing control panel

Floor Mounted Units

Make sure the unit is level and mounted on a field supplied platform with a minimum height to allow for proper depth of the condensate line p-trap. Other installation provisions may be necessary according to job specifications. V3 Series vertical air handling units are designed for up flow applications only.

Suspended Units

V3 Series vertical air handling units are not equipped for suspended installations.

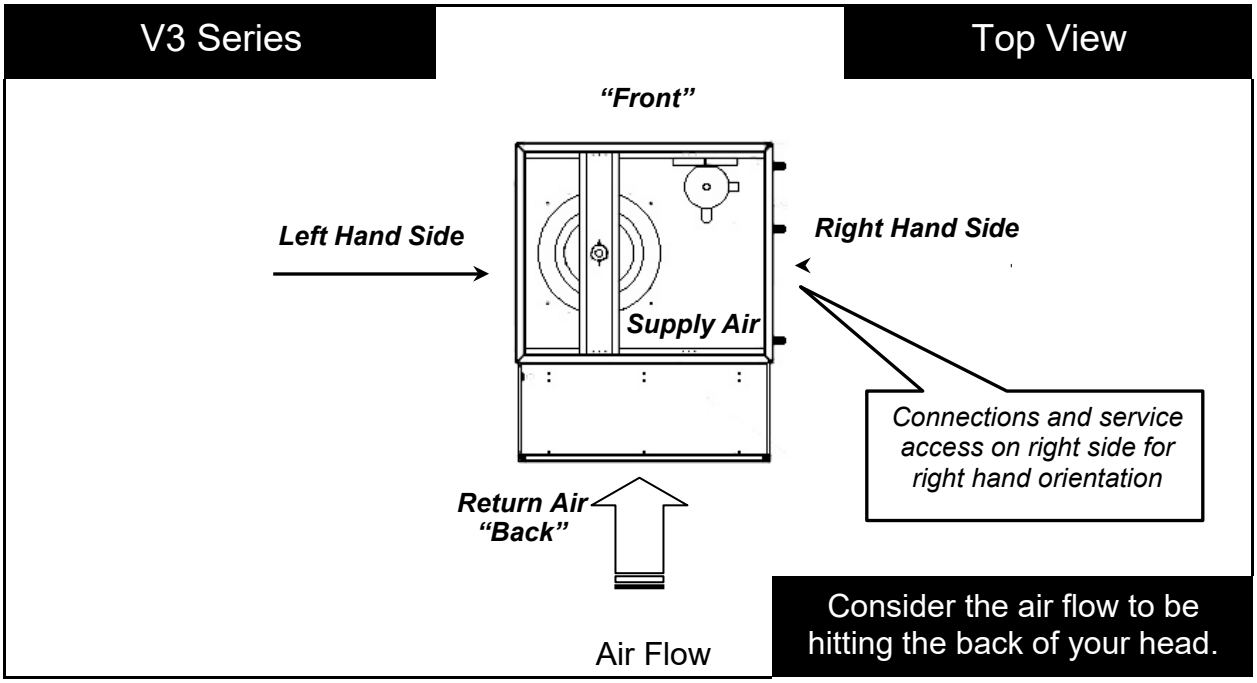

Figure 6 - V3 Series Unit Orientation

Note: Access doors may be on the "left" or "right" side as designated by the unit orientation on the configurator string. "Back" will always be the same side as the pre-filter and return air opening. "Front" will always be the side opposite the pre-filter and return air opening.

Lifting and Handling the Unit
Before lifting unit, be sure that all shipping material has been removed from unit.

Care must be taken if using spreader bars, blocking or other lifting devices to prevent damage to the cabinet, coil or fans.

⚠ WARNING

UNIT HANDLING

Improper lifting can cause damage to the unit, injury or death. Lifting equipment capacity must exceed unit weight by an adequate safety factor. Always test lift unit not more than 61 centimeters (24 inches) high to verify proper center of gravity lift point.

Unit Assembly

Although V3 Series units are shipped factory assembled as standard, the unit may be ordered as shipping splits for certain applications such as for assembly in existing structures where modules must be manipulated separately. If the unit was ordered as shipping splits, then they must be assembled in the field.

Locate the schematic in the equipment's literature packet.

1. *Identify and Situate Splits*
   V3 Units can have the following ship split sections:
   1. Exhaust Fan
   2. Energy Recovery
   3. Air Handler
   4. Pre Filter
   5. Mixing Box

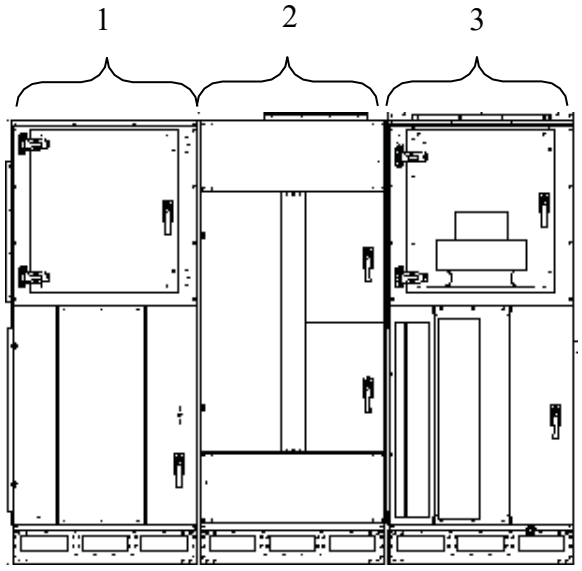

Figure 7 - V3 Schematic with (1) Exhaust Fan, (2) Energy Recovery, (3) Air Handler

2. *Connect Power and Control Wiring between sections*

V3 Series units are equipped with low and high voltage quick connects to connect wiring from one section to the next. It might be necessary to increase the hole size in the cabinet in order to get the quick connector through the opening. See the Electrical section for more information.

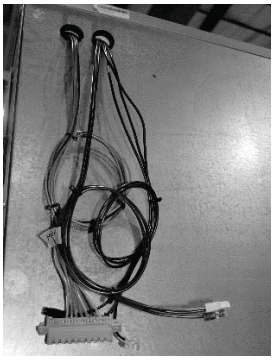

Figure 8 - Low & High Voltage Quick Connect

A color-coded wiring diagram is laminated and affixed to the inside of the control compartment access door.

V3 Series units are equipped with a single point power connection. Wire from the unit to external controls and power sources must be provided in the field.

3. *Connect Sections*

Remove the access side panels by removing the screws and pulling the panels off. Using the V3 Schematic as an example, section 1 will have a duct flange, and it will connect to section 2 on the side that does not have a flange.

Apply 13 mm (½") thick, 16 mm (5/8") wide adhesive gasket around the edges of the box without the flanges.

Push section 1 and 2 together so that the flange from section 1 is inside of section 2.

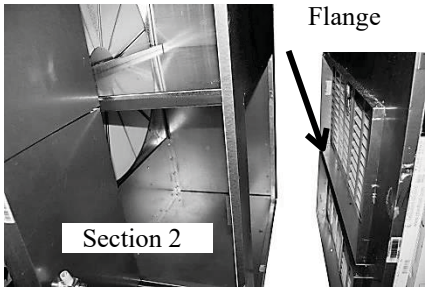

Figure 9 - Connect Sections

Use bar clamps or other non-destructive winching device to pull the tops of the modules together tightly.

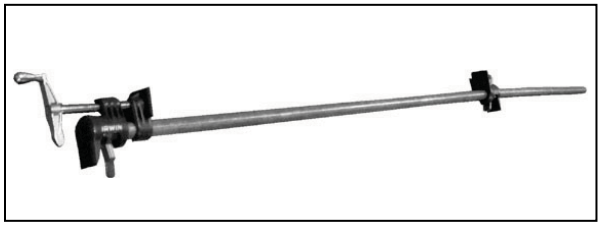

Figure 10 - Bar Clamp

At each of the pre-drilled holes in the flange, drill 8 mm (5/16") head self-tapping screws to secure the two sections together.

Figure 11 - Flange Overlap

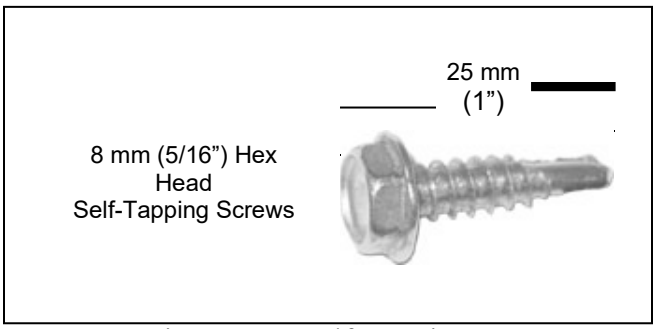

Figure 12 – Self-Tapping Screw

V3 units with a forklift base must be bolted together at the connecting sections. See Figure 13

Figure 13 - Forklift Base Assembly

4. *Re-attach Access Side Panels*

5. *Final Sealing*

It is very important to keep air from infiltrating the unit cabinet. Seal all piping penetrations with Armaflex, Permagum or other suitable sealant. Also seal around drain connections, electrical connections and all other inlets where air may enter the cabinet. This is especially important when the unit is installed in an unconditioned area.

⚠ CAUTION

Proper sealing of the electrical and piping entries into the unit must be verified. Failure to seal the entries may result in damage to the unit and property.

Control Box

Some V3 units include an external control box that must be mounted in the field. The control box is designed with two mounting holes on the back panel. Make sure the wall fasteners can hold the weight of the control box. See Figure 14.

External control boxes provided with conduit exceeding 1.8 m (6ft) in length must have conduit supported in compliance with the National Electrical Code NFPA 70. FMC and LMFC conduit must be supported within 30.5 cm (12 in.) of both the unit and the external control box and at intervals no more than 1.4 m (4.5 ft) along the length.

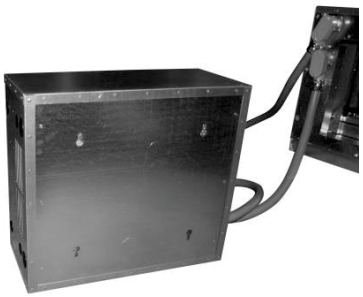

Figure 14 - Back View External Control Box

Electrical

For units not equipped with incoming power disconnect, means for all pole disconnection must be provided in the fixed wiring in accordance with local or national codes. Verify the unit nameplate agrees with power supply. Connect power and control field wiring as shown on the unit specific wiring diagram provided laminated and attached to the door in the controls compartment.

Table 4 - Nameplate Voltage Markings & Tolerances

Hz	Nameplate Voltage	Nominal System Voltage	Operating Voltage Range [1]		Acceptable Performance Range[2]	
			Min	Max	Min	Max
60	115	120	104	127	108	126
	208/230	208/240	187	254	187	252
	208	208	187	228	187	228
	230	240	208	254	216	252
	265	277	240	293	249	291
	460	480	416	508	432	504
	575	600	520	635	540	630
50	230	230	198	254	208	254
	400	400	344	440	360	440

Notes:

1. Operating voltage is the min and max voltage for which the unit can function. Never operate outside of this min and max voltage.
2. The Acceptable Performance Range is the min and max voltage for which the unit performance is designed and rated to give acceptable performance.

Route power and control wiring, separately, through the utility entry in the base of the unit. Do not run power and signal wires in the same conduit.

⚠ WARNING

The foam insulation releases dangerous fumes when it is burnt. Do not cut a foam part with a cutting torch or plasma cutter. Do not weld to a foam filled part.

All units require field supplied electrical overcurrent and short circuit protection. Device must not be sized larger than the Maximum Overcurrent Protection (MOP) shown on the unit nameplate.

Codes may require a disconnect switch be within sight of the unit.

It is recommended that the field installed overcurrent protection or disconnect switch not be installed on the unit.

On units with external control box, electrical supply can enter through either side of the controls compartment.

Figure 15 - External control box electrical connections

On units with internal control panel, electrical supply can enter through the return air side (rear) of the V3 unit.

Figure 16 - V3 internal control panel electrical connections

A single point connection to a terminal block is provided. High voltage conductors must enter the control panel in a separate opening and separate conduit than low voltage conductors.

Field wired disconnecting means of power, external to the unit, must be incorporated in the fixed wiring in accordance with the wiring rules and provide full disconnection of all poles under overvoltage Category III conditions.

⚠ WARNING

Electric shock hazard. Before attempting to perform any installation, service, or maintenance, shut off all electrical power to the unit at the disconnect switches. Unit may have multiple power supplies. Failure to disconnect power could result in dangerous operation, serious injury, death, or property damage.

⚠ CAUTION

Ensure that wires are protected from sharp edges, damage and wear caused by normal operation of unit, and environmental factors.

To pass wires through the wall or roof of the unit, cut a hole and pass conduit through it. Use the following procedure to cut a round hole in a foam panel.

Cutting Electrical Openings

1. Locate the placement of the hole. Be sure that the conduit will not interfere with the operation of any component or prevent access of any door or removable panel. Field cut openings must be a minimum of 15 centimeters (6 inches) away from all components and wiring to prevent damage due to drilling or cutting.
2. Drill a pilot hole all the way through the foam panel.
3. Using a hole saw, cut the hole through the metal on both sides of the foam part.
4. With a knife cut the foam out of the hole.
5. After the conduit is installed in the hole caulk the entire perimeter of the hole on both sides with an industrial grade silicone sealant or a duct seal compound.

⚠ CAUTION

Proper sealing of the electrical entries into the unit must be verified. Failure to seal the entries may result in damage to the unit and property.

If a larger cut-out is needed for additional duct connections not provided by the factory, or for any other reason, it is very important that the foam be completely sealed. Insulation covers must be fabricated from sheet metal to cover the foam at the cut. The edges and corners that are not covered must then be sealed using silicone caulking or a duct seal compound.

If a reciprocating saw is used to make the cut-out, take care that the metal skins of the foam part do not separate from the foam, this would result in reduced structural integrity of the part.

Size supply conductors based on the unit Minimum Current Ampacity (MCA) rating. Supply conductors must be rated a minimum of 75°C (167°F).

Protect the branch circuit in accordance with code requirements. The unit must be electrically grounded in accordance with local codes, or in the absence of local codes, the current National Electric Code, ANSI/NFPA 70 or the current Canadian Electrical Code CSA C22.1.

Note: Units are factory wired for 208V, 230V, 460V or 575V. In some units, the 208V and 230V options may also be provided in single or three phase configurations. The transformer configuration must be checked by a qualified technician prior to startup.

Wire power leads to the unit's terminal block or main disconnect. All wiring beyond this point has been completed by AAON and cannot be modified without effecting the unit's agency/safety certification.

Supply voltage must be within the min/max range shown on the unit nameplate. Available short circuit current must not exceed the short circuit current rating (SCCR) shown on the unit nameplate.

⚠ CAUTION

Three phase voltage imbalance will cause motor overheating and premature failure.

Three phase voltage imbalance will cause motor overheating and premature failure. The maximum allowable imbalance is 2%.

Voltage imbalance is defined as 100 times the maximum deviation from the average voltage divided by the average voltage.

Example:
(221V+230V+227V)/3 = 226V, then 100*(226V-221V)/226V = 2.2%, which exceeds the allowable imbalance.

Check voltage imbalance at the unit disconnect switch and at the compressor terminal. Contact your local power company for line voltage corrections.

A qualified technician must check for proper motor rotation and check blower motor amperage listed on the motor nameplate is not exceeded.

⚠ CAUTION

Rotation must be checked on all MOTORS of three phase units. Supply fan motors must all be checked by a qualified service technician at startup and any wiring alteration must only be made at the unit power connection.

Wire control signals to the unit's low voltage terminal block located in the controls compartment.

If any factory installed wiring must be replaced, use a minimum 105°C (221°F) type AWM insulated conductors.

Thermostat Control Wiring
If a thermostat is used for unit control, locate the thermostat on an inside wall 1.2 and 1.5 meters (4-5 feet) above the floor where it will not be subjected to drafts, sun exposure, or heat from electrical fixtures of appliances. Control wiring must deliver adequate voltage to components to assure proper operation. Control voltage returning from controller circuit must be a minimum of 21 VAC. To assure proper wiring use the following chart to determine the allowable wiring distances.

Table 5 - Control Wiring

Wire Size (Stranded) Copper Conductors Only	Total Wire Distance Allowable	
20 AWG	61 m	200 ft
18 AWG	106.7 m	350 ft
16 AWG	152.4 m	500 ft
14 AWG	228.6 m	750 ft
12 AWG	381.0 m	1250 ft

Total Wire Distance Allowable =
(Quantity of Control Wires) x
(Control Wire Distance)

Take the total wire distance allowable and divide by the number of wires to be connected. This indicates the distance allowable for that size wire. The wiring to the unit must not exceed the total wire distance allowable. If the voltage at the connectors is less than 21 VAC, isolation relays must be installed. If under external control 21 VAC must be field verified.

All external devices must be powered via a separate external power supply.

Example:
A total of 8 wires must be pulled 75ft (22.9 m) to a control the unit. What size wire must be used?

According to the Table 5, 16 AWG allows for 63ft (500 ft/8 wires) and 14 AWG allows for 94ft (750 ft/8 wires). Thus, 14 AWG must be used.

Fuses and Circuit Breakers
The interrupting rating of fuses and circuit breakers is to be determined based on the KAIC rating of the unit. Refer to the wiring diagram for fuse sizing.

Table 6 – 35 KAIC Fuse Sizing

35 KAIC Construction		
Component	**Description**	**Interrupting Rating (kA)**
Fuse	Class CC, 600V, 0.5A - 30A	200
Fuse	Class J, 600V, 35A - 600A	200
Disconnect	3P, 600V, 15A - 600A	35

Table 7 – 65 KAIC Fuse Sizing

65 KAIC Construction		
Component	**Description**	**Interrupting Rating (kA)**
Fuse	Class CC, 600V, 0.5A - 30A	200
Fuse	Class J, 600V, 35A - 600A	200
Disconnect	3P, 600V, 15A - 600A	65

Duct Connection
Attach duct to flanges provided on the unit. The installer is responsible for sealing ducts to the flanges to prevent water leaks.

See Figure 6 for return and supply air duct locations. Size ductwork in accordance with the ASHRAE Handbook. Install ductwork in accordance with NFPA Standard 90A.

When attaching duct to the unit, use a flexible/compressible material rated for duct connections. A 7.6 centimeter (3 inch) flexible connector for both return and supply duct connections is recommended.

Condensate Drain Pans
Units require field installed drain p-traps and lines to be connected to the condensate drain pans of the unit.

For condensate drain lines, the line must be the same pipe size or larger than the drain connection, include a p-trap, and pitch downward toward drain. An air break must be used with long runs of condensate lines. See Installation section of this manual for more information.

⚠ CAUTION

Do not operate unit without p-traps. Failure to install a p-traps may result in overflow of condensate water.

Condensate Drain Piping
A p-trap and drain line must be installed on the drain connection, with the p-trap not to exceed 15.3 cm (6”) from the drain connection. The lines must be the same pipe size or larger than the drain connection, include a p-trap, and pitch downward toward drain. An air break must be used with long runs of condensate lines.

⚠ CAUTION

Use an emergency drain pan for all applications where a risk of water damage to surrounding structure or furnishings. Refer to local codes.

Draw-through cooling coils will have a negative static pressure in the drain pan area. This will cause an un-trapped drain to back up due to air being pulled up through the condensate drain piping.

Condensate drain trapping and piping must conform to all applicable governing codes.

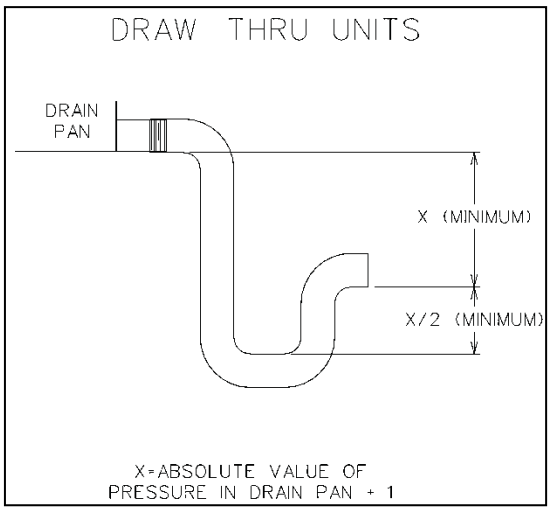

Figure 17 - Drain Trap

Note: The drain pan connection is a 24 mm (1") MPT fitting.

The X dimension on the draw-through trap must be at least equal to the absolute value of the negative static pressure in the drain pan plus 2.5 centimeters (one inch). To calculate the static pressure at the drain pan add the pressure drops of all components upstream of the drain pan, including the cooling coil, and add the return duct static pressure. Include the dirt allowance pressure drop for the filters to account for the worst-case scenario.

The height from top of the bottom bend of the trap to the bottom of the leaving pipe must be at least equal to one half of the X dimension. This ensures that enough water is stored in the trap to prevent losing the drain seal during unit startup

Note: The absolute value of the fan inlet pressure will always be greater than or equal to the absolute value of the static pressure in the drain pan on draw-through units, so the fan inlet pressure is a safe value to use for the drain pan static pressure.

Table 8 - Drain Trap Dimensions (Metric)

Draw-Through		
Drain Pan Pressure	Trap Dimensions	
Negative Static	X	X/2
(mm of mercury)	(mm)	(mm)
-0.93	38.10	19.05
-1.87	50.80	25.40
-2.80	63.50	31.75
-3.74	76.20	38.10
-4.67	88.90	44.45
-5.60	101.60	50.80
-6.54	114.30	57.15
-7.47	127.00	63.50

Table 9 – Drain Trap Dimensions (Imperial)

Draw-Through		
Drain Pan Pressure	Trap Dimensions	
Negative Static	X	X/2
(inches of water)	(in.)	(in.)
-0.50	1.50	0.75
-1.00	2.00	1.00
-1.50	2.50	1.25
-2.00	3.00	1.50
-2.50	3.50	1.75
-3.00	4.00	2.00
-3.50	4.50	2.25
-4.00	5.00	2.50

Startup

(See back of the manual for startup form)

⚠ WARNING

Improper installation, adjustment, alteration, service or maintenance can cause property damage, personal injury or loss of life. Startup and service must be performed by a Factory Trained Service Technician. A copy of this IOM must be kept with the unit.

⚠ WARNING

Electric shock hazard. Shut off all electrical power to the unit to avoid shock hazard or injury from rotating parts.

During startup, it is necessary to perform routine checks on the performance of the unit. This includes checking of the air flow, the air filters and refrigerant charge.

Filters

Do not operate the unit without filters in place. Operation of the equipment without filters in place can result in clogged coils. Units are shipped with the selected filters installed. If filters have been removed during installation, open the filter access door and re-install the correct filters with the airflow indicator arrows pointing in the direction of airflow.

Check filters after a few days of operation after the unit has been started up as dust and debris from construction may cause premature filter loading. Replace the filters if necessary.

Supply Fans

V3 Series units are equipped with direct drive backward curved plenum supply fan assemblies that deliver the air volume specified according to unit size and job requirements.

Fan Air Flow Adjustment

On some V3 Series units, a specific air volume is delivered by the fans with Electronically Commutated Motors (ECM). Field air flow adjustment may be required at startup.

Electrically Commutated Motor Airflow Adjustment

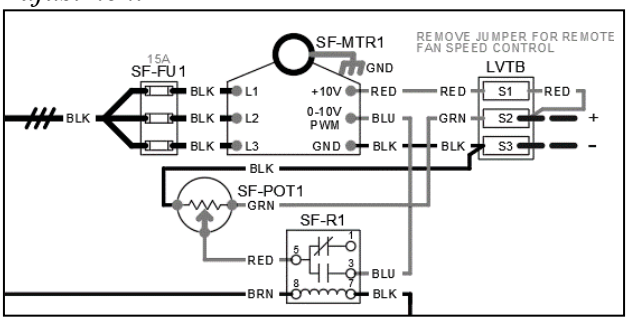

Figure 18 - Typical wiring diagram with EC motor

If the application is for the motor to run at a constant speed, the potentiometer can be utilized without any change. If the application is to vary the motor speed for changing conditions, remove the jumper indicated on the terminal strip (red wire).

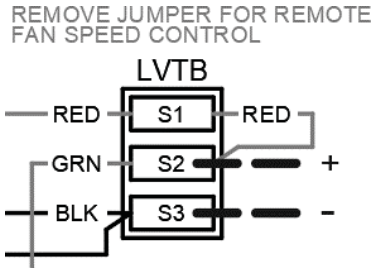

Figure 19 - Shows the jumper that is to be removed (jumped between S1 and S2).

Note, the potentiometer is still active in the electrical loop. Refer to Figure 18.

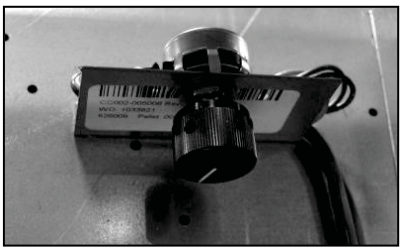

Figure 20 - Potentiometer

Set the potentiometer dial for the maximum fan speed for a particular application.

Maximum fan speed is determined by the ECat submittal. Typically, this max speed will be the rpm set at the factory.

The fan speed can be modulated using the 0-10 VDC input signal.

To check fan output from the factory, the potentiometer can be dialed to 100%. By sending a 5V signal*, for instance, the rpm can be measured and this reading can be converted to cubic feet of air moved by the fan.

It is advised that a medium range signal* be utilized for this procedure. The highest signal sent by the controller can then be determined by adjustment.

⚠ CAUTION

Before completing startup and leaving the unit a complete operating cycle must be observed to verify that all components are functioning properly.

Operation

Unit operations must be controlled with thermostat or unit controller, never at the main power supply, except for emergency or complete shutdown of the unit.

Refrigerant Detection System

Unit is equipped with a Refrigerant Detection System (RDS) to detect leaked refrigerant within the conditioned airstream. The RDS system consists of a mitigation board and one or more refrigerant sensors in the conditioned airstream. In the event of a refrigerant leak that could leak into the occupied space, the RDS sensors will send an alarm to the mitigation board. In the event of an alarm, the compressor operation is disabled and the indoor blower is enabled to provide circulation airflow in accordance with UL 60335-2-40. The board will remain in alarm state for five minutes after RDS sensor has cleared the alarm below the concentration setpoint.

The mitigation board is provided with a normally open relay labeled "COMP". If required by the paired condensing unit, this relay is to be wired to the appropriate terminals to disable compressor operation in the event of a refrigerant leak in the conditioned airstream.

The mitigation board is equipped with an alarm output. For VAV applications and applications utilizing zone dampers, the VAV boxes and zone dampers must be wired to the mitigation board output to open all VAV boxes and zone dampers to allow for the required circulation airflow to prevent stagnation of leaked refrigerant.

Verify functionality of RDS by removing sensor connection at the mitigation board and ensuring that all sequences above take place, including the opening of VAV boxes and zone dampers if applicable.

⚠ CAUTION

Refrigerant sensors may only be replaced with manufacturer approved sensors.

Thermostat Operation

Heating

Thermostat system switch - "Heat" Thermostat fan switch - "Auto" or "On" Thermostat temperature set to desired point.

Cooling

Thermostat system switch - "Cool" Thermostat fan switch - "Auto" or "On" Thermostat temperature set to desired point.

Air Circulation
Thermostat system switch - "Off"
Thermostat fan switch - "Auto" or "On" No change of the thermostat temperature.
With these settings, the supply blower will run continuously but the supply air will not be heated, cooled, or dehumidified.

System Off
Thermostat system switch - "Off"
Thermostat fan switch - "Auto"
No change of the thermostat temperature.
With these settings the system is shut down, with the exception of control system power.

Night and Weekend Unoccupied Operation
To reduce the operating time of the unit when the space is unoccupied, such as nights and weekends, it is recommended thatthe temperature setting be raised about -15 °C (5°F) while unoccupied during the cooling season and lowered about -12.2°C (10°F) during the heating season.

Split System DX Cooling Operation and Control
When a call for cooling (G and Y1, Y2, etc.) is made the supply blower motors and compressors will energize.

Chilled Water or Non-Compressorized DX Cooling Operation
Valve controls for chilled water cooling coil and non-compressorized DX coil are by others.

Steam or Hot Water Preheating Operation
Valve control for steam and hot water heating coils are by others. Heating is accomplished by passing steam or hot water through the steam or hot water coil assembly.

Maintenance

(See back of the manual for maintenance log.)

At least once each year, a qualified service technician must inspect the unit. Inspect supply fans, evaporator coils and air filters monthly.

⚠ WARNING

Improper installation, adjustment, alteration, service or maintenance can cause property damage, personal injury or loss of life. Installation and service must be performed by a qualified installer. A copy of this IOM must be kept with the unit.

Periodically during operation, it is necessary to perform routine service checks on the performance of the unit. This includes checking of the air flow, the air filters, cooling water flow and refrigerant charge.

See Startup section for information on air flow adjustment and refrigerant charge adjustment.

DX Cooling

Set unit controls to cooling mode of operation with supply fans on. Check the fans for correct operating direction, amperage and voltage.

Condensate Drain Pans

Drain pans will have moisture present and require periodic cleaning to prevent microbial growth. Cleaning of the drain pans will also prevent any possible plugging of the drain lines and overflow of the pan itself. Cleaning of the drain pans and inside of the unit must be done only by qualified personnel.

Winterizing Coils

In some cases it may be necessary to winterize water coils to prevent them from freezing.

First completely drain the coils. There is a drain located below the 'water in' connection and a vent connection located above the 'water out' connection. Auxiliary drain piping can also be added to exterior water piping if yearly winterizing is necessary.

After the coil is drained, fill with an antifreeze solution using a circulating pump. Then thoroughly drain.

Supply Fans

⚠ CAUTION

Blower wheels must be inspected for excessive dust build up periodically and cleaned if required. Excessive dust build up on blower wheels may cause an unbalanced state; leading to vibration and/or component failure. Damages due to excessive dust build up will not be covered under factory warranty.

⚠ WARNING

Electric shock hazard. Shut off all electrical power to the unit to avoid shock hazard or injury from rotating parts.

E-Coated Coil Cleaning
Documented routine cleaning of e-coated coils is required to maintain coating warranty coverage for fin and tube and microchannel coils. See the AAON E-Coated Coil Maintenance Record sheet.

⚠ WARNING

Electric shock hazard. Shut off all electrical power to the unit to avoid shock hazard or injury from rotating parts.

Surface loaded fibers or dirt must be removed prior to water rinse to prevent restriction of airflow. If unable to backwash the side of the coil opposite of the coils entering air side, then surface loaded fibers or dirt must be removed with a vacuum cleaner. If a vacuum cleaner is not available, a ***soft non-metallic*** bristle brush may be used. In either case, the tool must be applied in the direction of the fins. Coil surfaces can be easily damaged (fin edges bent over) if the tool is applied across the fins.

Use of a water stream, such as a garden hose, against a surface loaded coil will drive the fibers and dirt into the coil. This will make cleaning efforts more difficult. Surface loaded fibers must be completely removed prior to using low velocity clean water rinse.

A ***monthly*** clean water rinse is recommended for coils that are applied in coastal or industrial environments to help to remove chlorides, dirt, and debris. It is very important when rinsing, that water temperature is less than 54.4°C (130°F) and pressure is less than 689.5 kpa (100 psig) to avoid damaging the fin edges. An elevated water temperature (not to exceed 54.4°C [130°F]) will reduce surface tension, increasing the ability to remove chlorides and dirt.

⚠ CAUTION

High velocity water from a pressure washer or compressed air must only be used at a very low pressure to prevent fin and/or coil damages. The force of the water or air jet may bend the fin edges and increase airside pressure drop. Reduced unit performance or nuisance unit shutdowns may occur.

Quarterly cleaning is essential to extend the life of an e-coated coil and is required to maintain coating warranty coverage.
Coil cleaning shall be part of the unit's regularly scheduled maintenance procedures. Failure to clean an e-coated coil will void the warranty and may result in reduced efficiency and durability.

⚠ CAUTION

Harsh chemicals, household bleach, or acid cleaners must not be used to clean outdoor or indoor e-coated coils. These cleaners can be very difficult to rinse out of the coil and can accelerate corrosion and attack the E-coating. If there is dirt below the surface of the coil, use the recommended coil cleaners.

For routine quarterly cleaning, first clean the coil with the below approved coil cleaner. After cleaning the coils with the approved cleaning agent, use the approved chloride

remover to remove soluble salts and revitalize the unit.

Recommended Coil Cleaner
The following cleaning agent, when used in accordance with the manufacturer's directions on the container for proper mixing and cleaning, has been approved for use on e-coated coils to remove mold, mildew, dust, soot, greasy residue, lint, and other particulate:

GulfClean ™ Coil Cleaner ; AAON PN: G074480

Recommended Chloride Remover
GulfClean Salt Reducer™ ; AAON PN: G074490

GulfClean Salt Reducer™ is used to remove soluble salts from the e-coated coil, follow the manufacturer's instructions. This product is not intended for use as a degreaser. Any grease or oil film must first be removed with GulfClean ™ Coil Cleaner.

Remove Barrier - First ensure the power to the unit is off and locked out. Clean the area around the unit if needed to ensure leaves, grass or loose debris will not be blown into the coil. Soluble salts adhere themselves to the substrate. For the effective use of this product, the product must be able to come in contact with the salts. These salts may be beneath any soils, grease or dirt; therefore, these barriers must be removed prior to application of this product. As in all surface preparation, the best work yields the best results.

Application - Apply GulfClean ™ Coil Cleaner directly onto the substrate. Sufficient product must be applied uniformly across the substrate to thoroughly wet out surface, with no areas missed. This may be accomplished by use of a pump-up sprayer or conventional spray gun. Apply the cleaner to unit interior air exiting side coil surfaces first. Work in sections/panels moving side to side and from top to bottom. Allow the cleaning solution to soak for 5 to 10 minutes. Then move on to the exterior using the same method.

Rinse - Using pressurized potable water such as a garden hose, (< 689.5 kpa [100 psi]), rinse the coils and continue to always work in sections/panels.

Continue until all coil areas on the inside of the unit have been rinsed. ***Note: Coils must always be cleaned / back flushed, opposite of airflow to prevent impacting the dirt into the coil.***

Repeat these steps with GulfClean ™ Salt Reducer. When finished replace all panels and tops that were removed.

Refrigerant Removal and Evacuation
If removal of refrigerant is required for any maintenance or servicing, conventional procedures must be used and removal of refrigerant must be in accordance with local and national regulations.

Safety precautions must be taken prior to beginning work to ensure that the risk of fire due to flammable refrigerants is minimized. Work is to be undertaken under a controlled procedure to reduce the amount of refrigerant vapor present while work is being performed. All maintenance staff and others working in the area are to be instructed on the nature of work being performed. Care should be taken to ensure that working in a confined space is avoided.

⚠ WARNING ⚠

Prior to performing work that can result in release of a flammable refrigerant, inspect area to ensure it is free of any potential ignition sources. “No Smoking” signs are to be displayed while performing work.

Check area with a refrigerant detector suitable for use with the refrigerant prior to and during work in order to be aware of potential flammable environment. Keep a dry powder or CO2 fire extinguisher nearby if any hot work is being performed.

Ensure that work area is sufficiently ventilated before breaking into the system. Ventilation must continue throughout all of the work. Ensure that ventilation safely removes flammable refrigerant to an area that will adequately disperse refrigerant to avoid concentration above flammable levels.

Refrigerant must be recovered into the correct recovery cylinders in accordance with local and national regulations. Recovery cylinders must be labeled properly. Ensure that the correct number of cylinders are available for holding the entire charge of the system. Cylinders must have pressure relief and shut-off valves that are in proper working order. Fully evacuate a recovery cylinder before use.

The recovery equipment must be in good working order with a set of instructions concerning the equipment that is at hand. Ensure that equipment is suitable for the recovery of flammable refrigerant used. If in doubt, the manufacturer should be consulted. In addition, a set of calibrated weighing scales must be available and in good working order. Ensure hoses are complete with leak-free disconnect couplings and in good condition.

When removing refrigerant in order to open system, evacuate system and flush or purge the system continuously with an inert gas when using a flame to open the circuit.

The system must be purged with oxygen-free nitrogen to render the appliance safe for flammable refrigerant. Compressed air or oxygen must not be used. When pulling a vacuum, ensure that the outlet of the vacuum pump is not near any potential ignition source and in a well ventilated area.

The recovered refrigerant is to be processed according to local legislation in the correct recovery cylinder, and the relevant waste transfer note arranged. Do not mix refrigerants in recovery units and especially not in cylinders.

If compressors or compressor oils are to be removed, ensure that they have been evacuated to an acceptable level to make certain that flammable refrigerant does not remain within the lubricant. Do not heat the compressor body by using an open flame or other ignition sources to accelerate this process. Remove any drained oil safely.

Add max allowable charge for any individual circuit to the DO NOT OVERCHARGE black box warning in charging section, OR the footnotes beneath table for RN product

Add max allowable charge for any individual circuit to the DO NOT OVERCHARGE black box warning in charging section OR the footnotes beneath table for RN product

Options

Heating Coils

One or two row hot water and steam heating and preheating coils can be factory installed. These coils are supplied from a building hot water source. All valve controls for heating coil operation are field supplied and field installed.

Hot water and steam coil connections are spun copper tube. Connect the steam heating supply to the top of the coil and the return to the bottom.

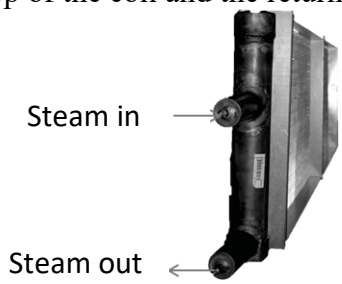

Figure 21 - Steam Distributing Piping

Table 10 - Steam Distributing Coil Sweat Connection Sizes

Model (H3-)	Supply and Return Connection Size (OD)	
A-E	5.4 cm	2 1/8"

Air handling units with steam heating coils **MUST BE** installed high enough to allow for a minimum of 0.3 meters (1 foot) condensate drop leg off of the steam coil, or as recommended by the steam trap manufacturer. Lines must be insulated with approved insulation and be properly fastened, sloped, and supported according to local code requirements.

Table 11 - Hot Water Coil Sweat Connection Sizes

Model (V3-)	Supply and Return Connection Size (OD)	
A	2.2 cm	7/8"
B	2.9 cm	1 1/8"
C	3.5 cm	1 3/8"
D	4.1 cm	1 5/8”
E	4.1 cm	1 5/8”

Connect the hot water heating supply to the bottom of the coil and return to the top.

Figure 22- Hot & Chilled Water Piping

Water coils must not be subjected to entering air temperatures below 3.3°C (38°F) to prevent coil freeze-up. If air temperature across the coil is going to be below this value, use a glycol solution to match the coldest air expected.

Water supply lines must be insulated, properly fastened, drained, and supported according to local code requirements.

Chilled Water Coil

Factory installed four, six or eight row chilled water cooling coils can be factory mounted. These coils are supplied from a building chilled water source. All valve controls for the cooling coil operation are field supplied and field installed.

Table 12 - Chilled Water Coil Sweat Connection Sizes

Model (V3-)	Supply and Return Connection Size (OD)	
A	2.9 cm	1 1/8"
B	3.5 cm	1 3/8"
C	4.1 cm	1 5/8"
D	5.4 cm	2 1/8”
E	5.4 cm	2 1/8”

Connect the chilled water supply to the bottom of the coil and return to the top.

Water supply lines must be insulated with closed cell type pipe insulation or insulation that includes a vapor barrier. Lines must be properly fastened, drained and supported according to local code requirements, and job specifications.

Table 13 - Minimum and Maximum Coil Pressures and Temperatures

	Chilled Water	Hot Water
Min. Entering Air	15.6°C (60°F)	4.4 °C (40°F)
Max Entering Air	37.8°C (100°F)	26.7°C (80°F)
Min. Entering Water	1.7°C (35°F)	60°C (140°F)
Max Entering Water	18.3°C (65°F)	93.3°C (200°F)
Min. Water Pressure	0 kpa (15 psig)	
Max Water Pressure	2068kpa (300 psig)	

⚠ WARNING

Piping shall be in accordance with national and local codes. Pressure limiting devices, backflow preventers and all other safety requirements are the sole responsibility of the installing contractor.

⚠ CAUTION

Ensure water piping entries into the unit are properly sealed. Failure to seal the entries may result in damage to the unit and property.

Direct Expansion (DX) Systems

All DX refrigerant coils are factory charged with a nitrogen holding charge. All DX systems include evaporator coils and thermal expansion valves (TXV).

Never turn off the main power supply to the unit, except for servicing, emergency, or complete shutdown of the unit. When power is cut off from the unit, crankcase heaters cannot prevent refrigerant migration into the split system condensing unit compressors. This means the compressor may cool down and liquid refrigerant may accumulate in the compressor. The compressor is designed to pump refrigerant gas and damage may occur when power is restored.

⚠ CAUTION

CRANKCASE HEATER OPERATION

Some units are equipped with compressor crankcase heaters, which must be energized at least 24 hours prior to cooling operation, to clear any liquid refrigerant from the compressors.

If power to the unit must be off for more than an hour, turn the thermostat system switch to "OFF", or turn the unit off at the control panel, and leave the unit off until the main power switch has been turned on again for at least 24 hours for units with compressor crankcase heaters. This will give the crankcase heater time to clear any liquid accumulation out of the compressor before it is started.

Always control the unit from the thermostat, or control panel, never at the main power supply, except for emergency or complete shutdown of the unit.

During the cooling season, if the air flow is reduced due to dirty air filters or any other reason, the cooling coils can get too cold which will cause excessive liquid to return to the compressor. As the liquid concentration builds up, oil is washed out of the compressor, leaving it starved for lubrication.

The compressor life will be seriously shortened by reduced lubrication and the pumping of excessive amounts of liquid oil and refrigerant.

Note: Low Ambient Operation
Air-cooled DX units without a low ambient option, such as condenser fan cycling or the -17.8°C (0°F) low ambient option, will not operate in the cooling mode of operation properly when the outdoor temperature is below 12.8°C (55°F). Low ambient and/or economizer options are recommended if cooling operation below 12.8°C (55°F) is expected.

Evaporator Coil
The air handling unit coils are pressurized. The copper caps must be punctured to permit a gradual escape of the pressure prior to un-sweating those caps. Immediately couple the tubing to the indoor unit to avoid exposing the coils to moisture. A properly sized filter drier is furnished in the condenser. When making solder connections, make sure dry nitrogen flows through the lines, when heating the copper, to prevent oxidization inside of the copper. **Field piping between the condensing unit and the air handler is required. Line sizes must be selected to meet actual installation conditions, not simply based on the connection sizes.**

⚠ CAUTION

REFRIGERANT PIPING

Line sizes must be selected to meet actual installation conditions, not simply based on the connection sizes at the condensing unit or air handling unit.

Thermal Expansion Valve
Thermal expansion valve bulbs must be mounted with good thermal contact on a horizontal section of the suction line close to the evaporator, but outside the cabinet, and well insulated. On suction lines less than or equal to 22 mm (7/8”) OD, mount in the 12 o’clock position. On suction lines greater than 2 mm (7/8”) OD, mount in either the 4 o’clock or 8 o’clock position.

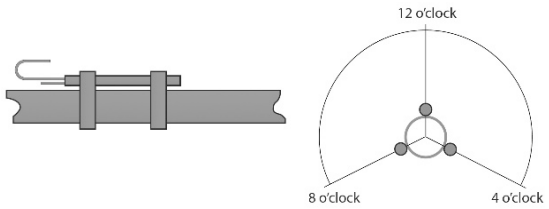

Figure 23 - TXV Bulb Position

Hot Gas Reheat
Hot Gas Reheat (HGRH) is available for use with DX systems that need humidity control. The AAON modulating hot gas reheat system diverts hot discharge gas from the condenser

to the air handling unit through the hot gas line. **Field piping between the condensing unit and the air handler is required. Line sizes must be selected to meet actual installation conditions, not simply based on the connection sizes.**

The line delivers the hot discharge gas to the reheat coil and/or the hot gas bypass valve, so it is sized as a discharge line.

Hot Gas Bypass

Hot Gas Bypass is available for use with DX systems that may experience low suction pressure during the operating cycle. This may be due to varying load conditions associated with VAV applications or units supplying a large percentage of outside air. Hot Gas Bypass is not necessary in units with variable capacity compressors. The system is designed to divert refrigerant from the compressor discharge to the low pressure side of the system in order to keep the evaporator from freezing and to maintain adequate refrigerant velocity for oil return at minimum load.

Hot discharge gas is redirected to the evaporator inlet via an auxiliary side connector (ASC) to false load the evaporator when reduced suction pressure is sensed. **Field piping between the condensing unit and the evaporator is required. Line sizes must be selected to meet actual installation conditions, not simply based on the connection sizes.**

Purge Circuit

The purge circuit is required on hot gas reheat or hot gas bypass lines. The purge circuit needs to be field furnished and installed at the lowest point of the line set.

With this installation, oil drains into the drain leg of the hot gas reheat line. Oil accumulates until it reaches the level of the 3 mm (1/8") capillary tubing.

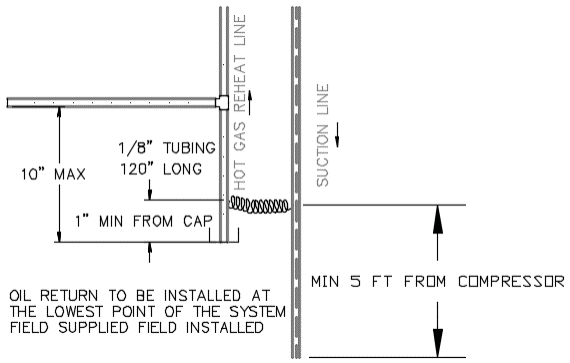

Figure 24 - Hot Gas Purge Circuit

The combination of capillary action and the pressure difference between the hot gas reheat line (high pressure) and the suction line (low pressure) causes the oil to travel through the capillary tube into the suction line of the first circuit to return the oil to the compressor. The capillary tube connection to the suction line of the first circuit must be a minimum of 1.5 meters (5 feet) from the inlet to the compressor to allow the oil time to dissipate into the suction vapor and not slug the compressor with liquid oil.

Adjusting Refrigerant Charge

Adjusting the charge of a system in the field must be based on determination of liquid sub-cooling and evaporator superheat. On a system with a TXV, liquid sub-cooling is more representative of the charge than evaporator superheat but both measurements must be taken.

⚠ CAUTION

The Clean Air Act of 1990 bans the intentional venting of refrigerant (CFC's and HCFC's) as of July 1, 1992. Approved methods of recovery, recycling or reclaiming must be followed. Fines and/or incarceration may be levied for non-compliance.

Before Charging
Refer to the Unit Nameplate to determine which refrigerant must be used to charge the system.

Unit being charged must be at or near full load conditions before adjusting the charge.

Units equipped with hot gas bypass must have the hot gas bypass valve closed to get the proper charge.

Units equipped with hot gas reheat must be charged with the hot gas reheat valves closed while the unit is in cooling mode to get the proper charge. After charging, operate the unit in reheat (dehumidification) mode to check for correct operation.

Units equipped with heat pump options must be charged in cooling mode to get the proper charge. After charging, operate the unit in heating mode to check for correct charge. Charge may need to be adjusted for heating mode. If adjustments are made in the heating mode, cooling mode must be rerun to verify proper operation.

After adding or removing charge the system must be allowed to stabilize, typically 10-15 minutes, before making any other adjustments.

The type of unit and options determine the ranges for liquid sub-cooling and evaporator superheat. Refer to the tables below when determining the proper sub-cooling.

For units equipped with low ambient (-17.78°C [0°F]) option see the special charging instructions in the CF Series Installation and Operation Manual.

Checking Liquid Sub-Cooling
Measure the temperature of the liquid line as it leaves the condenser.

Read the gauge pressure at the liquid line close to the point where the temperature was taken. Use liquid line pressure as it will vary from discharge pressure due to condenser pressure drop.

Convert the pressure obtained to a saturated temperature using the appropriate refrigerant temperature-pressure chart.

Subtract the measured liquid line temperature from the saturated temperature to determine the liquid sub-cooling.

Compare calculated sub-cooling to the table below for the appropriate unit type and options.

Table 14 - Acceptable Refrigeration Circuit Values

	Cooling Mode Liquid Sub-Cooling Values (°C)	Cooling Mode Liquid Sub-Cooling Values (°F)
Cooling Only Unit[4]	4.4 - 8.3	8-15
Cooling Only Unit with Hot Gas Reheat[1,4]	2.8 - 8.3	5-15
Heat PumpUnit[2,4]	1.1 - 2.2	2-4
Heat Pump Unit with Hot Gas Reheat[3,4]	1.1 - 3.3	2-6
Cooling Only Unit with LAC[4]	4.4 - 8.3	8-15
Cooling Only Unit with Hot Gas Reheat & LAC[4]	4.4 - 8.3	8-15

Notes:
1. Must be charged with the hot gas valve closed. After charging, operate the unit in reheat (dehumidification) mode to check for correct operation.
2. Sub-cooling must be increased by 0.6°C (1°F) per 3.1 meters (10 feet) of vertical liquid line rise for R-454B (AHU above CU). For example, a cooling only unit with hot gas reheat and a vertical liquid drop can charge to

a sub-cooling value between 2.8 and 8.3°C (5-15°F), but a cooling only unit with hot gas reheat and a vertical liquid rise of 9.1 m (30 ft) must charge to a sub-cooling value of at least between 4.4 and 8.3°C (8-15°F). DO NOT OVERCHARGE. Refrigerant overcharging leads to excess refrigerant in the condenser coils resulting in elevated compressor discharge pressure.

Table 15 - Acceptable Microchannel Air-Cooled Condenser Coil Liquid Sub- Cooling Values (Metric)

	Cooling Mode Liquid Sub-Cooling Values(°C)				
Ambient (°C)	Evaporator Coil Saturation Temperature (°C)				
	4.4	7.2	8.9	10.0	12.8
19.4	5.0 - 7.8	4.4 - 7.2	4.4 - 7.2	3.9 - 6.7	2.8 - 5.6
22.2	5.6 - 8.3	5.0 - 7.8	5.0 - 7.8	4.4 - 7.2	3.9 - 6.7
27.8	5.6 - 8.3	5.6 - 8.3	5.6 - 8.3	5.0 - 7.8	3.9 - 6.7
35.0	5.6 - 8.3	5.6 - 8.3	5.6 - 8.3	5.0 - 7.8	4.4 - 7.2
40.6	6.1 - 8.9	6.1 - 8.9	5.6 - 8.3	5.6 - 8.3	4.4 - 7.2
46.1	5.6 - 8.3	6.1 - 8.9	6.1 - 8.9	6.1 - 8.9	5.0 - 7.8

Table 16 - Acceptable Microchannel Air-Cooled Condenser Coil Liquid Sub-Cooling Values (Imperial)

	Cooling Mode Liquid Sub-Cooling Values(°F)				
Ambient (°F)	Evaporator Coil Saturation Temperature (°F)				
	40	45	48	50	55
67	9 - 14	8 - 13	8 - 13	7 - 12	5 - 10
72	10 - 15	9 - 14	9 - 14	8 - 13	7 - 12
82	10 - 15	10 - 15	10 - 15	9 - 14	7 - 12
95	10 - 15	10 - 15	10 - 15	9 - 14	8 - 13
105	11 - 16	11 - 16	10 - 15	10 - 15	8 - 13
115	10 - 15	11 - 16	11 - 16	11 - 16	9 - 14

Notes:

1. Microchannel condenser coils are more sensitive to charge. The system must be running in cooling mode with compressor, supply airflow & condenser fan speed at full load. The sub-cooling value changes depending on the ambient temperature reading and the evaporator coil saturation temperature. To find the correct sub-cooling value, find the ambient temperature on the first column and follow that across to the SST (4.4-12.8°C [40-55°F]).
2. Superheat for Microchannel condenser coils must be between 4.4 and 8.3°C (8 - 15°F).

Checking Evaporator Superheat
Measure the temperature of the suction line close to the evaporator.

Read gauge pressure at the suction line close to the evaporator.

Convert the pressure obtained to a saturated temperature using the appropriate refrigerant temperature-pressure chart.

Subtract the saturated temperature from the measured suction line temperature to determine the evaporator superheat.

Compare calculated superheat to the acceptable cooling mode superheat values between 4.4 and 8.3°C (8 - 15°F) for all system types. Superheat will increase with long suction line runs.

For refrigeration systems with tandem compressors, it is critical that the suction superheat setpoint on the TXV is set with one compressor running. The suction superheat must be 5.6 and 7.2°C (10-13°F) with one compressor running. The suction superheat will increase with both compressors in a tandem running. Inadequate suction superheat can allow liquid refrigerant to return to the compressors which will wash the oil out of the compressor. Lack of oil lubrication will destroy a compressor. Measure liquid sub-cooling with both compressors in a refrigeration system running.

⚠ CAUTION

Thermal expansion valve must be adjust to approximately 4.4 and 8.3°C (8-15°F) of suction superheat. Failure to have sufficient superheat will damage the compressor and void the warranty.

Adjusting Sub-Cooling and Superheat Temperatures
The system is overcharged if the sub-cooling temperature is too high and the evaporator is fully loaded (low loads on the evaporator result in increased sub-cooling) and the evaporator superheat is within the temperature range as shown in the table above (high superheat results in increased sub-cooling).

Correct an overcharged system by reducing the amount of refrigerant in the system to lower the sub-cooling.

⚠ CAUTION

DO NOT OVERCHARGE!

Refrigerant overcharging leads to excess refrigerant in the condenser coils resulting in elevated compressor discharge pressure. The max allowable charge for any circuit according to Table 17 is 130.4 kg (4600 oz).

The system is undercharged if the superheat is too high and the sub-cooling is too low

Correct an undercharged system by adding refrigerant to the system to reduce superheat and raise sub-cooling.

If the sub-cooling is correct and the superheat is too high, the TXV may need adjustment to correct the superheat. Before adjusting the TXV, verify the sensing bulb is in the correct position according to Figure 23 and follows the guidelines below.

1. The suction line is clean where the sensing bulb is attached.

2. The entire length of the sensing bulb is in contact with the suction line.

3. Place the sensing bulb several several centimeters (inches) downstream of the equalizer line.

4. The sensing bulb is fully insulated.

5. If the sensing bulb is installed on a vertical portion of the suction line, place the sensing bulb upstream of suction line trap

Table 17 - Minimum Circulation Airflow and Room Area for a Given Charge

Charge of Largest Circuit in kg (oz)		Min Circulation Airflow in m^3/hr (CFM)		Minimum Room Area in m^2 (ft^2)					
				1.8 m (6 ft) ceiling/release height		3 m (10 ft) ceiling/release height		3.7 m (12 ft) ceiling/release height	
1.4	50	**144**	85	**5**	57	**3**	34	**3**	28
1.9	66	**190**	112	**7**	76	**4**	45	**3**	37
2.3	82	**236**	139	**9**	94	**5**	56	**4**	46
2.8	98	**282**	166	**10**	112	**6**	67	**5**	55
3.2	114	**328**	193	**12**	131	**7**	78	**6**	64
3.7	130	**374**	220	**14**	149	**8**	89	**7**	72
4.1	146	**419**	247	**16**	167	**9**	100	**8**	81
4.6	162	**465**	274	**17**	186	**10**	111	**8**	90
5.0	178	**511**	301	**19**	204	**11**	122	**9**	99
5.5	194	**557**	328	**21**	222	**12**	133	**10**	108
6.0	210	**603**	355	**22**	241	**13**	144	**11**	117
6.4	226	**649**	382	**24**	259	**14**	155	**12**	126
6.9	242	**695**	409	**26**	277	**15**	166	**13**	135
7.3	258	**741**	436	**27**	296	**16**	177	**13**	144
7.8	274	**787**	463	**29**	314	**17**	188	**14**	153
8.2	290	**833**	490	**31**	332	**19**	199	**15**	162
8.7	306	**879**	517	**33**	351	**20**	210	**16**	171
9.2	326	**937**	551	**35**	373	**21**	224	**17**	182
9.6	340	**977**	575	**36**	389	**22**	234	**18**	189
10.2	360	**1034**	609	**38**	412	**23**	247	**19**	201
10.8	380	**1092**	643	**40**	435	**24**	261	**20**	212
11.3	400	**1149**	676	**43**	458	**26**	275	**21**	223
12.0	424	**1218**	717	**45**	486	**27**	291	**22**	236
12.7	448	**1287**	758	**48**	513	**29**	308	**23**	250
13.4	472	**1356**	798	**50**	541	**30**	324	**24**	263
14.1	496	**1425**	839	**53**	568	**32**	341	**26**	276
14.7	520	**1494**	879	**55**	596	**33**	357	**27**	290
15.4	544	**1563**	920	**58**	623	**35**	374	**28**	303
16.3	576	**1655**	974	**61**	660	**37**	396	**30**	321
17.2	608	**1747**	1028	**65**	696	**39**	418	**31**	339
18.1	640	**1839**	1082	**68**	733	**41**	440	**33**	357
19.1	672	**1931**	1136	**72**	770	**43**	462	**35**	374
20.0	704	**2023**	1191	**75**	806	**45**	484	**36**	392
20.9	736	**2115**	1245	**78**	843	**47**	506	**38**	410
21.8	768	**2207**	1299	**82**	880	**49**	528	**40**	428

Table 17 - Minimum Circulation Airflow and Room Area for a Given Charge (continued)

Charge of Largest Circuit in kg (oz)		Min Circulation Airflow in m^3/hr (CFM)		Minimum Room Area in m^2 (ft^2)					
				1.8 m (6 ft) ceiling/release height		3 m (10 ft) ceiling/release height		3.7 m (12 ft) ceiling/release height	
22.7	800	**2299**	1353	**85**	916	**51**	550	**41**	446
23.6	832	**2391**	1407	**89**	953	**53**	572	**43**	464
24.5	864	**2482**	1461	**92**	990	**55**	594	**45**	481
25.4	896	**2574**	1515	**95**	1026	**57**	616	**46**	499
26.3	928	**2666**	1569	**99**	1063	**59**	638	**48**	517
27.2	960	**2758**	1623	**102**	1100	**61**	660	**50**	535
28.1	992	**2850**	1678	**106**	1136	**63**	682	**51**	553
28.6	1010	**2902**	1708	**107**	1157	**64**	694	**52**	563
30.1	1060	**3046**	1793	**113**	1214	**68**	729	**55**	591
31.5	1110	**3189**	1877	**118**	1271	**71**	763	**57**	619
32.9	1160	**3333**	1962	**123**	1329	**74**	797	**60**	646
34.3	1210	**3477**	2046	**129**	1386	**77**	832	**63**	674
35.7	1260	**3620**	2131	**134**	1443	**80**	866	**65**	702
37.1	1310	**3764**	2215	**139**	1501	**84**	900	**68**	730
38.6	1360	**3908**	2300	**145**	1558	**87**	935	**70**	758
40.0	1410	**4051**	2385	**150**	1615	**90**	969	**73**	786
41.4	1460	**4195**	2469	**155**	1672	**93**	1003	**76**	814
42.8	1510	**4339**	2554	**161**	1730	**96**	1038	**78**	841
44.2	1560	**4482**	2638	**166**	1787	**100**	1072	**81**	869
45.6	1610	**4626**	2723	**171**	1844	**103**	1107	**83**	897
47.1	1660	**4770**	2807	**177**	1901	**106**	1141	**86**	925
48.5	1710	**4913**	2892	**182**	1959	**109**	1175	**89**	953
49.9	1760	**5057**	2976	**187**	2016	**112**	1210	**91**	981
51.3	1810	**5201**	3061	**193**	2073	**116**	1244	**94**	1009
52.7	1860	**5344**	3146	**198**	2131	**119**	1278	**96**	1036
54.1	1910	**5488**	3230	**203**	2188	**122**	1313	**99**	1064
55.6	1960	**5632**	3315	**209**	2245	**125**	1347	**101**	1092
57.0	2010	**5775**	3399	**214**	2302	**128**	1381	**104**	1120
59.5	2100	**6034**	3551	**223**	2405	**134**	1443	**109**	1170
62.4	2200	**6321**	3721	**234**	2520	**140**	1512	**114**	1226
65.2	2300	**6608**	3890	**245**	2635	**147**	1581	**119**	1282
68.0	2400	**6896**	4059	**255**	2749	**153**	1649	**124**	1337
70.9	2500	**7183**	4228	**266**	2864	**160**	1718	**129**	1393
73.7	2600	**7470**	4397	**277**	2978	**166**	1787	**135**	1449
76.5	2700	**7758**	4566	**287**	3093	**172**	1856	**140**	1505
79.4	2800	**8045**	4735	**298**	3207	**179**	1924	**145**	1560

Table 17 - Minimum Circulation Airflow and Room Area for a Given Charge (continued)

Charge of Largest Circuit in kg (oz)		Min Circulation Airflow in m^3/hr (CFM)		Minimum Room Area in m^2 (ft^2)					
				1.8 m (6 ft) ceiling/release height		3 m (10 ft) ceiling/release height		3.7 m (12 ft) ceiling/release height	
82.2	2900	**8332**	4904	**309**	3322	**185**	1993	**150**	1616
85.0	3000	**8620**	5073	**319**	3436	**192**	2062	**155**	1672
87.9	3100	**8907**	5243	**330**	3551	**198**	2131	**160**	1727
90.7	3200	**9194**	5412	**341**	3665	**204**	2199	**166**	1783
93.6	3300	**9482**	5581	**351**	3780	**211**	2268	**171**	1839
96.4	3400	**9769**	5750	**362**	3895	**217**	2337	**176**	1895
99.2	3500	**10056**	5919	**372**	4009	**223**	2405	**181**	1950
102.1	3600	**10344**	6088	**383**	4124	**230**	2474	**186**	2006
104.9	3700	**10631**	6257	**394**	4238	**236**	2543	**192**	2062
107.7	3800	**10918**	6426	**404**	4353	**243**	2612	**197**	2118
110.6	3900	**11206**	6595	**415**	4467	**249**	2680	**202**	2173
113.4	4000	**11493**	6765	**426**	4582	**255**	2749	**207**	2229
116.2	4100	**11780**	6934	**436**	4696	**262**	2818	**212**	2285
119.1	4200	**12068**	7103	**447**	4811	**268**	2887	**217**	2340
121.9	4300	**12355**	7272	**458**	4925	**275**	2955	**223**	2396
124.7	4400	**12642**	7441	**468**	5040	**281**	3024	**228**	2452
127.6	4500	**12930**	7610	**479**	5155	**287**	3093	**233**	2508
130.4	4600	**13217**	7779	**490**	5269	**294**	3161	**238**	2563

Table 18 – V3 Max Charges

Box Size	Maximum Charge of any Single Circuit in **kg** (oz)		Minimum Airflow for Non-Ducted Applications in **m^3/hr** (CFM)	
A	**20.1**	706	**705**	415
B	**36.9**	1300	**1201**	707
C	**70.9**	2500	**2241**	1319
D	**99.2**	3500	**3264**	1921
E	**130.4**	4600	**4815**	2834

Table 19 - R-454B Refrigerant Temperature-Pressure Chart (Metric)

°C	KPA	°C	KPA	°C	KPA	°C	KPA	°C	KPA
-6.7	484.5	**8.3**	843.3	**23.3**	1348.0	**38.3**	2034.6	**53.3**	2946.9
-6.1	495.6	**8.9**	859.3	**23.9**	1370.0	**38.9**	2064.1	**53.9**	2985.7
-5.6	506.9	**9.4**	875.3	**24.4**	1392.2	**39.4**	2093.9	**54.4**	3024.9
-5.0	518.2	**10.0**	891.6	**25.0**	1414.6	**40.0**	2123.9	**55.0**	3064.5
-4.4	529.7	**10.6**	908.1	**25.6**	1437.3	**40.6**	2154.3	**55.6**	3104.5
-3.9	541.5	**11.1**	924.8	**26.1**	1460.3	**41.1**	2185.0	**56.1**	3144.9
-3.3	553.3	**11.7**	941.7	**26.7**	1483.5	**41.7**	2216.1	**56.7**	3185.8
-2.8	565.4	**12.2**	958.8	**27.2**	1507.0	**42.2**	2247.4	**57.2**	3227.0
-2.2	577.6	**12.8**	976.2	**27.8**	1530.8	**42.8**	2279.1	**57.8**	3268.6
-1.7	589.9	**13.3**	993.7	**28.3**	1554.8	**43.3**	2311.1	**58.3**	3310.7
-1.1	602.5	**13.9**	1011.5	**28.9**	1579.0	**43.9**	2343.5	**58.9**	3353.2
-0.6	615.2	**14.4**	1029.4	**29.4**	1603.6	**44.4**	2376.2	**59.4**	3396.1
0.0	628.1	**15.0**	1047.6	**30.0**	1628.4	**45.0**	2409.2	**60.0**	3439.5
0.6	641.2	**15.6**	1066.0	**30.6**	1653.5	**45.6**	2442.6	**60.6**	3483.3
1.1	654.4	**16.1**	1084.7	**31.1**	1678.8	**46.1**	2476.2	**61.1**	3527.6
1.7	667.8	**16.7**	1103.5	**31.7**	1704.4	**46.7**	2510.3	**61.7**	3572.3
2.2	681.4	**17.2**	1122.6	**32.2**	1730.4	**47.2**	2544.7	**62.2**	3617.4
2.8	695.2	**17.8**	1141.9	**32.8**	1756.6	**47.8**	2579.4	**62.8**	3663.0
3.3	709.2	**18.3**	1161.5	**33.3**	1783.0	**48.3**	2614.5	**63.3**	3709.2
3.9	723.3	**18.9**	1181.3	**33.9**	1809.9	**48.9**	2650.0	**63.9**	3755.7
4.4	737.6	**19.4**	1201.3	**34.4**	1836.9	**49.4**	2685.7	**64.4**	3802.7
5.0	752.2	**20.0**	1221.5	**35.0**	1864.3	**50.0**	2721.9	**65.0**	3850.3
5.6	766.9	**20.6**	1242.0	**35.6**	1891.9	**50.6**	2758.5	**65.6**	3898.4
6.1	781.8	**21.1**	1262.8	**36.1**	1919.8	**51.1**	2795.4		
6.7	796.9	**21.7**	1283.7	**36.7**	1948.1	**51.7**	2832.7		
7.2	812.2	**22.2**	1304.9	**37.2**	1976.7	**52.2**	2870.4		
7.8	827.7	**22.8**	1326.3	**37.8**	2005.5	**52.8**	2908.4		

Table 20 - R-454B Refrigerant Temperature-Pressure Chart (Imperial)

°F	PSIG	°F	PSIG	°F	PSIG	°F	PSIG	°F	PSIG
20	70.3	**47**	122.3	**74**	195.5	**101**	295.1	**128**	427.4
21	71.9	**48**	124.6	**75**	198.7	**102**	299.4	**129**	433.0
22	73.5	**49**	127.0	**76**	201.9	**103**	303.7	**130**	438.7
23	75.2	**50**	129.3	**77**	205.2	**104**	308.0	**131**	444.5
24	76.8	**51**	131.7	**78**	208.5	**105**	312.5	**132**	450.3
25	78.5	**52**	134.1	**79**	211.8	**106**	316.9	**133**	456.1
26	80.3	**53**	136.6	**80**	215.2	**107**	321.4	**134**	462.0
27	82.0	**54**	139.1	**81**	218.6	**108**	326.0	**135**	468.0
28	83.8	**55**	141.6	**82**	222.0	**109**	330.6	**136**	474.1
29	85.6	**56**	144.1	**83**	225.5	**110**	335.2	**137**	480.2
30	87.4	**57**	146.7	**84**	229.0	**111**	339.9	**138**	486.3
31	89.2	**58**	149.3	**85**	232.6	**112**	344.6	**139**	492.6
32	91.1	**59**	151.9	**86**	236.2	**113**	349.4	**140**	498.8
33	93.0	**60**	154.6	**87**	239.8	**114**	354.3	**141**	505.2
34	94.9	**61**	157.3	**88**	243.5	**115**	359.1	**142**	511.6
35	96.9	**62**	160.1	**89**	247.2	**116**	364.1	**143**	518.1
36	98.8	**63**	162.8	**90**	251.0	**117**	369.1	**144**	524.6
37	100.8	**64**	165.6	**91**	254.8	**118**	374.1	**145**	531.3
38	102.9	**65**	168.5	**92**	258.6	**119**	379.2	**146**	538.0
39	104.9	**66**	171.3	**93**	262.5	**120**	384.3	**147**	544.7
40	107.0	**67**	174.2	**94**	266.4	**121**	389.5	**148**	551.5
41	109.1	**68**	177.2	**95**	270.4	**122**	394.8	**149**	558.4
42	111.2	**69**	180.1	**96**	274.4	**123**	400.1	**150**	565.4
43	113.4	**70**	183.1	**97**	278.4	**124**	405.4		
44	115.6	**71**	186.2	**98**	282.5	**125**	410.8		
45	117.8	**72**	189.3	**99**	286.7	**126**	416.3		
46	120.0	**73**	192.4	**100**	290.9	**127**	421.8		

Energy Recovery Units
Some V3 units have been equipped with an energy recovery wheel. AAON provides options for either an aluminum energy recovery wheel or a polymer energy recovery wheel. Follow the instructions for the specific type of energy recovery wheel in your installed equipment.

The Energy Recovery Cassette consists of a frame wheel, wheel drive system, and energy transfer segments. Segments are removable for cleaning or replacement. The segments rotate through counter flowing exhaust and outdoor air supply streams where they transfer heat and/or water vapor from the warm, moist air stream to the cooler and/or drier air stream.

The initial setup and servicing of the energy recovery wheel is very important to maintain proper operation efficiency and building occupant comfort.

Normal maintenance requires periodic inspection of filters, the cassette wheel, drive belts, air seals, wheel drive motor, and its electrical connections.

Wiring diagrams are provided with each motor. When wired according to wiring diagram, energy recovery wheel rotates clockwise when viewed from the shaft/pulley side.

By carefully reviewing the information within this section and following the instructions, the risk of improper operation and/or component damage will be minimized.

It is important that periodic maintenance be performed to help assure trouble free operation.

Initial Mechanical Check and Setup
Outdoor air intake adjustments must be made according to building ventilation, or local code requirements.

After the unit installation is complete, open the cassette access door and determine that the energy wheel rotates freely when turned by hand. Apply power and observe that the wheel rotates at approximately 30 RPM. If the wheel does not rotate when power is applied, it may be necessary to readjust the "diameter air seals".

Handle cassettes with care. Lift all cassettes by the bearing support beam. Holes are provided on both sides of the bearing support beams to facilitate rigging as shown in the following illustration.

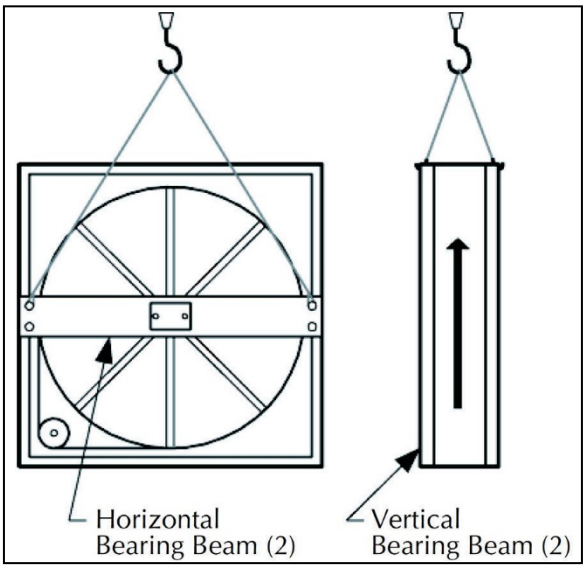

Figure 25 – Lifting Hole Locations

Airflow Balancing and Checking
High performance systems commonly have complex air distribution and fan systems. Unqualified personnel must not attempt to adjust fan operation, or air circulation, as all systems have unique operations characteristics. Professional air balance specialists must be employed to establish actual operating conditions, and to configure

the air delivery system for optimal performance.

Polymer Energy Recovery Wheel
This section is provided to assure the energy recovery feature will be properly setup to perform in accordance with the job specifications for your particular application.

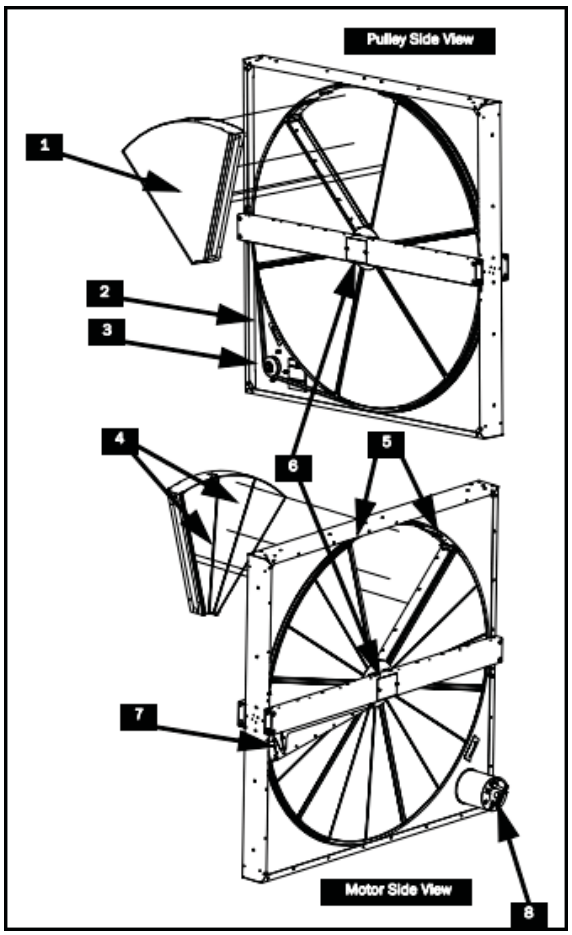

Figure 26 - Polymer Energy Recovery Wheel

1. Removable Segment
2. Permanent Tension Belt
3. Pulley
4. Embedded Segment Stiffeners
5. Segment Retaining Latches
6. Bearing Beam and Bearing Access Cover Plate (Diameter Seals are behind Bearing Beam on both sides)
7. Adjustable Purge
8. Motor

Polymer Wheel Set Purge Angle
When installed, the purge angle is factory set to 5 degrees. If a different angle is required, complete the following steps to adjust the purge:

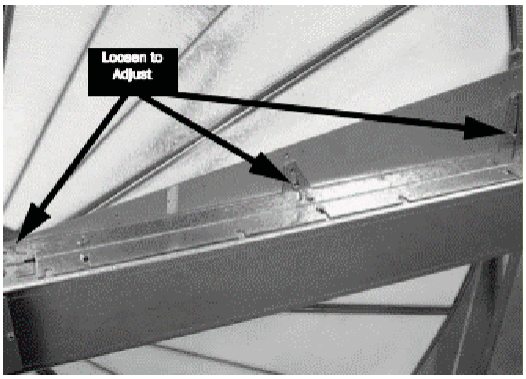

1. Loosen the three purge adjusting screws.
2. Adjust purge sector to the specified angle.

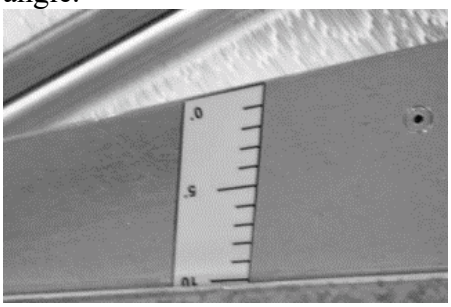

3. Tighten the purge adjusting screws.
4. Turn the wheel by hand clockwise (when viewed from pulley side) to check for interference.

Polymer Wheel Check Purge Seal
If a purge is installed, check for a slight interference fit between the seal and the face of the wheel by sliding a piece of paper ("feeler gauge") between the seal and the media a multiple locations along the purge seal as you rotate the wheel slowly by hand (clockwise when viewed from the pulley side). Verify that the media slightly grabs the paper during rotation.

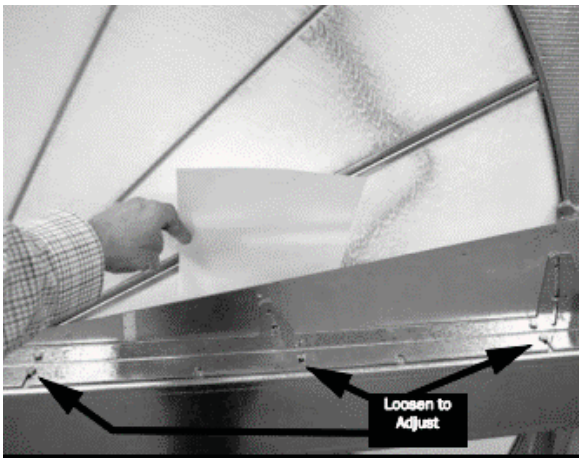

If it is necessary to adjust a purge seal to the face of the wheel, loosen the two or three screws along the bearing beam and adjust to the proper distance from the media surface. Tighten the screws and retest the seal.

Polymer Wheel Air Seal Adjustments
Pile type air seals across both sides of the energy wheel diameter are factory adjusted to provide close clearance between the air seal and wheel.

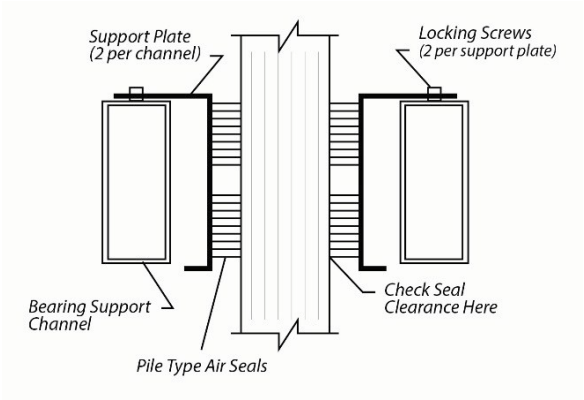

Cross Section of Air Seal Structure

Racking of the unit or cassette during installation, and/or mounting of the unit on a non-level support or in other than the factory orientation can change seal clearances. Tight seals will prevent rotation.

Polymer Wheel to Air Seal Clearance
To check wheel to seal clearance; first disconnect power to the unit, in some units the energy recovery wheel assembly can be pulled out from the cabinet to view the air seals. On larger units, the energy recovery wheel may be accessible inside the walk-in cabinet.

A business card or two pieces of paper can be used as a feller gauge, (typically each1 mm [.004”] thick) by placing it between the face of the wheel and pile seal.

Using the paper, determine if a loose slip fit exist between the pile seal and wheel when the wheel is rotated by hand.

To adjust air seal clearance, loosen all seal plate retaining screws holding the separate seal retaining plates to the bearing support channels and slide the seals plates away from the wheel. Using the paper feeler gauge, readjust and retighten one seal plate at a time to provide slip fit clearance when the wheel is rotated by hand.

Confirm that the wheel rotates freely. Apply power to the unit and confirm rotation. Visually inspect the belt and ensure the belt is tracking near the center of the rim. Verify the wheel speed is approximately 45-50 RPM. Confirm there is no excessive noise such as scraping, brushing, or banging.

Polymer Wheel Orientation & Support
The Energy Recovery Cassette may be mounted in any orientation. However, Care must be taken to make certain that the cassette frame remains flat and the bearing beams are not racked.

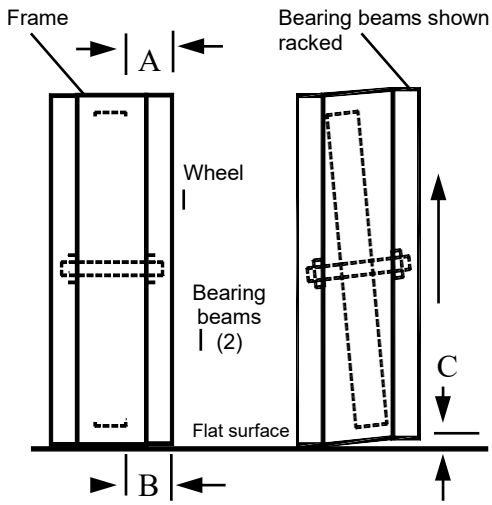

Avoid Racking of Cassette Frame

To verify, make certain that the distance between wheel rim and bearing beam is the same at each end of the bearing beam, to within 6 mm (1/4") (dimension A & B). This amount of racking can be compensated for by adjusting the diameter seals.

If greater than 6 mm (1/4") (dimension C), racking must be corrected to ensure that drive belt will not disengage from wheel.

Polymer Wheel Startup

Open the access door and determine that the energy recovery wheel rotates freely when turned by hand with no interference noise. Apply power and observe that the wheel rotates. If the wheel does not rotate when power is applied, it may be necessary to readjust the "diameter air seals".

1. By hand, turn wheel clockwise (as viewed from the pulley side), to verify wheel turns freely through 360º rotation.
2. Before applying power to drive motor, confirm wheel segments are fully engaged in wheel frame and segment retainers are completely fastened. (See Segment Installation Diagram).
3. With hands and objects away from moving parts, activate unit and confirm wheel rotation. Wheel rotates clockwise (as viewed from the pulley side).
4. If wheel has difficulty starting, turn power off and inspect for excessive interference between the wheel surface and each of the four (4) diameter seals. To correct, loosen diameter seal adjusting screws and back adjustable diameter seals away from surface of wheel, apply power to confirm wheel is free to rotate, then re-adjust and tighten hub and diameter seals, as shown in hub seal adjustment diagram.
5. Start and stop wheel several times to confirm seal adjustment and to confirm belt is tracking properly on wheel rim (approximately 6.4 mm [1/4"] from outer edge of rim).

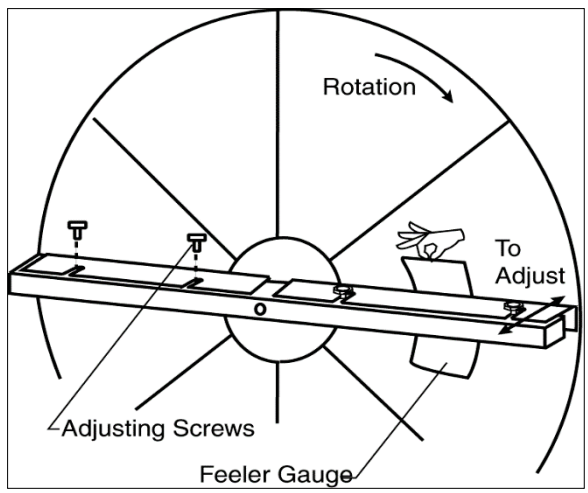

Diameter Seal Adjustment

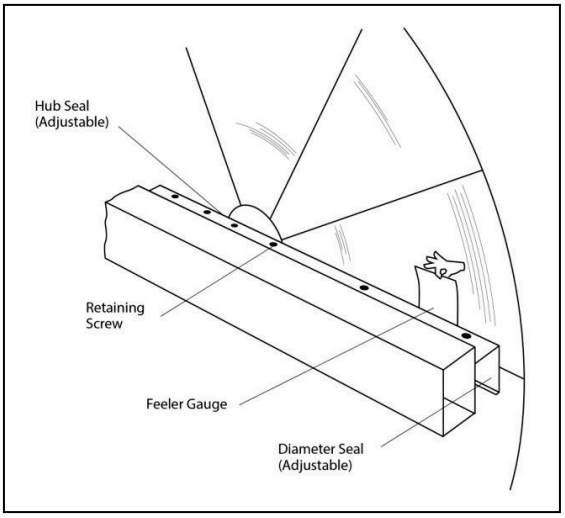

Hub Seal Adjustment

Controls

A variety of controls and electrical accessories may be provided with the equipment. Identify the controls on each unit by consulting appropriate submittal, or order documents, and operate according to the control manufacturer's instructions. If you cannot locate installation, operation, or maintenance information for the specific controls, then contact your sales representative, or the control manufacturer for assistance.

⚠ WARNING

Do not alter factory wiring. Deviation from the supplied wiring diagram will void all warranties, and may result in equipment damage or personal injury. Contact the factory with wiring discrepancies.

Aluminum Wheel Cleaning

See general energy recovering cleaning section for how often to clean.

To clean, gain access to the aluminum energy recovery wheel then use the following methods:

- Use a brush or vacuum cleaner to remove small materials.
- Use compressed air at a distance of at least 0.6 m (2 ft) from the wheel. Too much pressure can easily damage the aluminum media.
- First remove the energy recovery wheel from the unit. Then use water at a distance of at least 0.6 m (2 ft) from the wheel. Do not use detergents. Keep temperature below 25°C (77°F). Tightly cover all electric parts and bearings while used pressurized water. Remove excess water before reinstalling the wheel.

Polymer Energy Recovery Cleaning

To clean, gain access to the polymer energy recovery wheel, remove the segments, then use the following methods:

- Soak in the solution until grease and tar deposits are loosened (Note: some staining of the desiccant may remain and is not harmful to performance).
- Before removing, rapidly run finger across surface of segment to separate polymer strips for better cleaning action.
- Rinse dirty solution from segment and remove excess water before reinstalling in wheel.

⚠ CAUTION

Do not use acid based cleaners, aromatic solvents, steam or temperatures in excess of 76.7 °C (170°F); damage to the wheel may

Polymer Wheel Segment Installation & Replacement

An uneven number of segments in the wheel will cause the wheel to accelerate in rotation. Minimize wheel imbalance and unwanted rotation during service by installing or

removing opposing segments for even weight distribution. Failure to maintain control of the wheel rotation while removing or installing all segments could cause severe injury to fingers or hands. Always close and secure segment retaining latches before rotating wheel.

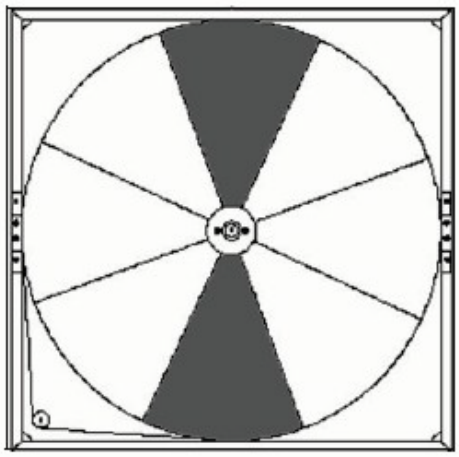

Figure 27 - Wheel Segment Removal Pattern

Wheel segments are secured to the wheel frame by a Segment Retainer which pivots on the wheel rim and is held in place by Segment Retaining Latches.

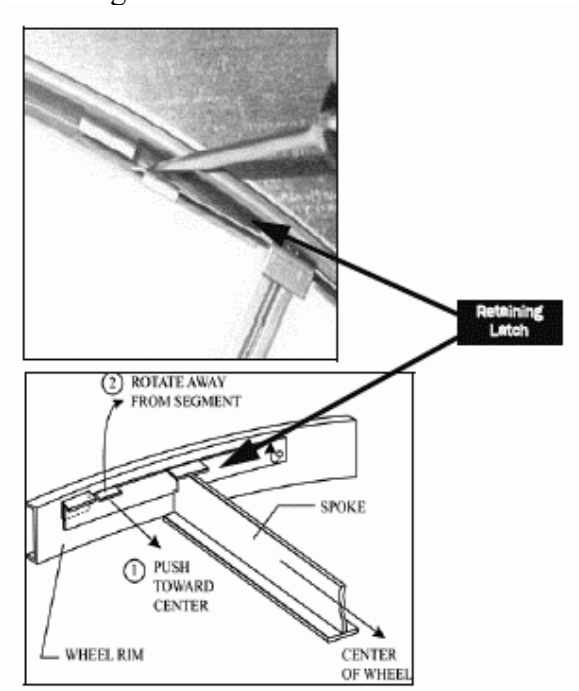

Segment Retainer

To install wheel segments, follow the steps below. Reverse procedure for segment removal.

1. Disconnect power from the wheel.
2. Gain access to the wheel and slide wheel frame out of cabinet.
3. Unlock two segment retainers (one on each side of the selected segment opening.
4. With the embedded stiffener facing the motor side, insert the nose of the segment between the hub plates.

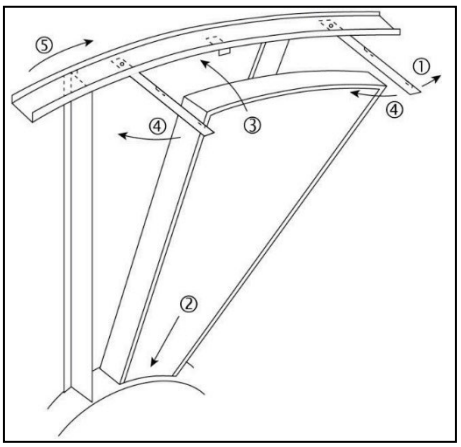

Segment Installation

5. Holding segment by the two outer corners, press the segment towards the center of the wheel and inwards against the spoke flanges. If hand pressure does not fully seat the segment, insert the flat tip of a screw driver between the wheel rim and outer corners of the segment and apply downward force while guiding the segment into place.
6. Close and latch each Segment Retainer under Segment Retaining Catch.
7. Slowly rotate the wheel 180º. Install the second segment opposite the first for counterbalance. Rotate the two installed segments 90º to balance the wheel while the third segment is installed. Rotate the wheel 180º again to install the fourth segment opposite the third. Repeat this sequence with the remaining four segments.

Polymer Wheel Air Seals
Four adjustable diameter seals are provided on each cassette to minimize transfer of air between the counter flowing airstreams.

To adjust diameter seals, loosen diameter seal adjusting screws and back seals away from wheel surface. Rotate wheel clockwise until two opposing spokes are hidden behind the bearing support beam. Using a folded piece of paper as a feeler gauge, position paper between the wheel surface and diameter seals.

Adjust seals towards wheel surface until a slight friction on the feeler gauge (paper) is detected when gauge is moved along the length of the spoke. Retighten adjusting screws and recheck clearance with "feeler" gauge.

Polymer Wheel Drive Components
The wheel drive motor bearings are pre-lubricated and no further lubrication is necessary.

The wheel drive pulley is secured to the drive motor shaft by a combination of either a key or D slot and set screw.

The set screw is secured with removable locktite to prevent loosening. Annually confirm set screw is secure. The wheel drive belt is a urethane stretch belt designed to provide constant tension through the life of the belt. No adjustment is required. Inspect the drive belt annually for proper tracking and tension. A properly tensioned belt will turn the wheel immediately after power is applied with no visible slippage during start-up.

Polymer Wheel Drive Motor and Pulley Replacement

1. Disconnect power to wheel drive motor.
2. Remove belt from pulley and position temporarily around wheel rim.
3. Loosen set screw in wheel drive pulley using a hex head wrench and remove pulley from motor drive shaft.
4. While supporting weight of drive motor in one hand, loosen and remove (4) mounting bolts.
5. Install replacement motor with hardware kit supplied.
6. Install pulley to dimension as shown and secure set screw to drive shaft.
7. Stretch belt over pulley and engage in groove.
8. Follow start-up procedure.

Polymer Wheel Belt Replacement

1. Obtain access to the pulley side bearing access plate if bearing access plates are provided. Remove two bearing access plate retaining screws and the access plate.
2. Using hexagonal wrench, loosen set screw in bearing locking collar. Using light hammer and drift (in drift pin hole) tap collar in the direction of wheel rotation to unlock collar. Remove collar.
3. Using socket wrench with extension, remove two nuts which secure bearing housing to the bearing support beam. Slide bearing from shaft. If not removable by hand, use bearing puller.
4. Form a small loop of belt and pass it through the hole in the bearing support beam. Grasp the belt at the wheel hub and pull the entire belt down.

Note: Slight hand pressure against wheel rim will lift weight of wheel from inner race of bearing to assist bearing removal and installation.

⚠ CAUTION

Protect hands and belt from possible sharp edges of hole in Bearing Support Beam.

5. Loop the trailing end of the belt over the shaft (belt is partially through the opening).
6. Reinstall the bearing onto the wheel shaft, being careful to engage the two locating pins into the holes in the bearing support beam. Secure the bearing with two self-locking nuts.
7. Install the belts around the wheel and pulley according to the instructions provided with the belt.
8. Reinstall diameter seals or hub seal and tighten retaining screws. Rotate wheel in clockwise direction to determine that wheel rotates freely with slight drag on seals.
9. Reinstall bearing locking collar. Rotate collar by hand in the direction the wheel rotates (see label provided on each cassette for wheel rotation).
10. Lock in position by tapping drift pin hole with hammer and drift. Secure in position by tightening set screw.
11. Reinstall Bearing Access Cover.
12. Apply power to wheel and ensure that the wheel rotates freely without interference.

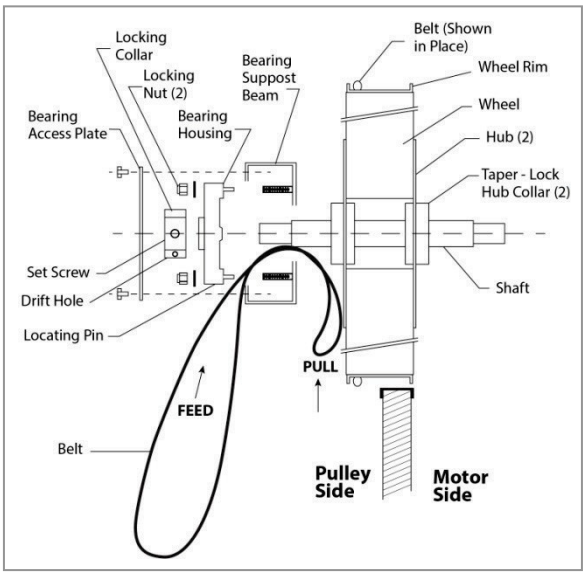

Belt Replacement

Energy Recovery Wheel General Cleaning
Routine maintenance of the Energy Recovery Wheel includes periodic cleaning of the Energy Recovery Wheel as well as inspection of the Air Seals and Wheel Drive Components.

⚠ CAUTION

Disconnect electrical power before servicing energy recovery cassette. Always keep hands away from bearing support beam when installing or removing segments. Failure to do so could result in severe injury to fingers or hand.

Cleaning the energy transfer media will help maintain optimal performance. The frequency of cleaning is largely dependent on the application and air quality. Use ASHRAE's Classes of Air categories, to create a routine cleaning schedule.

Class 1 air has low contaminant concentration with inoffensive odor and sensory irritation intensity.
Class 2 air has moderate contaminant concentration, with mildly offensive odors or sensory-irritation intensity.
Class 3 air has significant contaminant concentration and significant offensive odor or sensory-irritation intensity.
Class 4 air has highly objectionable fumes or gases and potentially contains dangerous particles, bio-aerosols, or gases at a concentration high enough to be considered harmful, not suitable for recirculation or transfer to any other space.

Table 20 – ASHRAE Classes of Air

Class of Air	Examples	Cleaning Frequency
Class 1 Clean Air	• Offices • Classrooms • Assembly rooms • Churches	Every 8-10 years
Class 2 Moderately Clean Air	• Restrooms • Swimming pools • Dining rooms • Locker rooms • Warehouse • Dorms	Every 4-6 years
Class 3 Dirty Air	• Kitchens • Dry cleaners • Beauty salons • Laboratories • Pet shops	Every 1-2 years
Class 4 Contaminated Air	• Paint spray booths • Laboratory fume exhaust • Kitchen grease exhaust	Do not use in this application

The energy recovery wheel is "self-cleaning" with respect to dry particles due to its laminar flow characteristics. Smaller particles pass through; larger particles land on the surface and are blown clear as the flow direction is reversed. Any material that builds up on the face of the wheel can be removed with a brush or vacuum. The primary need for cleaning is to remove oil based aerosols that have condensed on energy transfer surfaces.

A characteristic of all dry desiccants, such films can close off micron sized pores at the surface of the desiccant material, reducing the efficiency by which the desiccant can adsorb and desorb moisture and also build up so as to reduce airflow.

In a reasonably clean indoor environment such as a school or office building, measurable reductions of airflow or loss of sensible (temperature) effectiveness may not occur for several years. Measurable changes in latent energy (water vapor) transfer can occur in shorter periods of time in applications such as moderate occupant smoking or cooking facilities. In applications experiencing unusually high levels of occupant smoking or oil based aerosols such as industrial applications involving the ventilation of machine shop areas for example, annual washing of energy transfer may be necessary to maintain latent transfer efficiency. Proper cleaning of the energy recovery wheel will restore latent effectiveness to near original performance.

Electric Heating

The unit is designed to heat a given amount of air while operating. If this amount of air is greatly reduced, approximately 1/3 during the heating season, the electric heating coil may overheat, and may cut the heater off entirely by action of the safety high temperature limit devices which are factory mounted at the heat exchanger and supply fan areas.

Adjust airflow after installation to obtain an air temperature rise within the range specified on the unit rating plate at the required external static pressure.

The tested minimum and maximum range of static pressure for the V3 is 0.4 – 7.5 mmHg [0.2 – 4.0 inH2O]. The maximum supply air temperature is 60°C (140°F).

Table 21 - Electric Heating Capacities

	Electric Heat Capacity	
	kW (230V, 460V)	kW (208V)
A = *Heat A*	7.0	5.3
B = *Heat B*	14.0	10.5
C = *Heat C*	21.0	15.8
D = *Heat D*	28.0	21.0
E = *Heat E*	35.0	26.3
F = *Heat F*	42.0	31.5
G = *Heat G*	49.0	37.0
H = *Heat H*	56.0	42.0
J = *Heat J*	63.0	47.3
K = *Heat K*	70.0	52.5
L = *Heat L*	77.0	57.8
M = *Heat M*	84.0	63.0

Phase and Brownout Protection Module

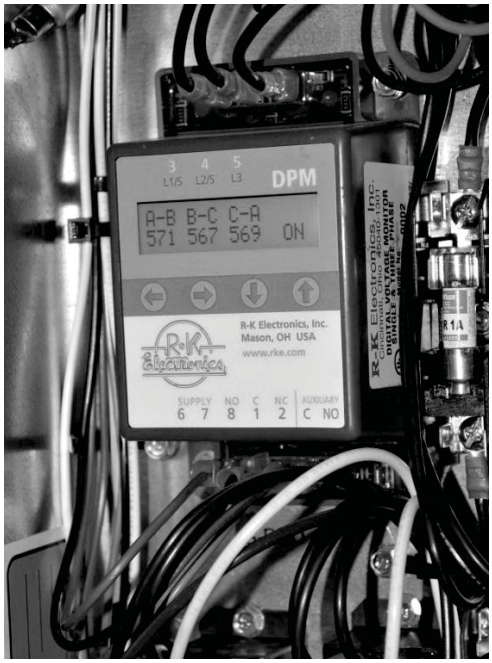

The DPM is a Digital Phase Monitor that monitors line voltages from 200VAC to 240VAC 1ϕ and 200VAC to 600VAC 3ϕ. The DPM is 50/60 Hz self-sensing. DPM shall be wired according to unit specific wiring diagram included in the control compartment

When the DPM is connected to the line voltage, it will monitor the line and if everything is within the setup parameters, the output contacts will be activated. If the line voltages fall outside the setup parameters, the output relay will be de-energized after the trip delay.

Once the line voltages recover, the DPM will re-energize the output relay after the restart time delay. All settings and the last 4 faults are retained, even if there is a complete loss of power.

DPM Setup Procedure

With the supply voltage active to the module, you can setup all of the DPM's settings without the line voltage connected.

To change the setpoint parameters use the right arrow key to advance forward through the setpoint parameters and the left arrow to backup if needed. When each parameter is displayed use the up/down keys to change and set the parameter.

After adjustments are made or if no adjustments are made it will take 2 to 4 minutes before the DPM energizes the output relay unless there is an out of tolerance issue with the incoming line voltage.

<u>Default Set-up</u>

Line Voltage	460VAC, 3Ø
Over & Undervoltage	±10%
Trip Time Delay	5 Seconds
Re-Start Time Delay	2 Minutes
Phase Imbalance	5%

Screens

Manufacturer's Screen

R-K Electronics
DPM v0.0.00

Average Voltage Screen

VAvg	Imb	Hz	
460	0	60	off

Default – the default screen shows the real time voltage detected in each of the 3 phases:

A-B	B-C	C-A	
460	459	461	ON

Voltage Selection Screen (Vertical Format) Default = 460V, 3Ø

200, 1Ø; 208, 1Ø; 220, 1Ø; 230, 1Ø; 240, 1Ø;
200, 3Ø; 208, 3Ø; 220, 3Ø; 230, 3Ø; 240, 3Ø; 380, 3Ø; 415, 3Ø; 440, 3Ø;
460, 3Ø; 480 3Ø; 575, 3Ø; 600, 3Ø;

Over/Under voltage Percentage Screen (Vertical Format) Default = 10%

7% 8% 9% 10% 11% 12% 13% 14% & 15%

Trip Time Delay Screen (Vertical Format) Default = 5 sec

2S, 3S, 4S, 5S, 6S, 27S, 8S, 9S & 10S

Re-Start Time Delay Screen (Vertical Format) Default = 2 sec

Manual, 2S, 3S, 4S, 5S, 6S, 7S, 8S, 9S, 10S, 30S, 1M, 2M, 3M & 4M

Phase Imbalance Percentage Screen (Vertical Format) Default = 5%

3% 4% 5% 6% 7% 8% 9% & 10%

Fault Screen (Vertical Format)

"0" most recent faults, "1" previous fault "2" third oldest fault & "3" fourth oldest fault.

Fault Words:

"Phase a Loss"	(There is no voltage sensed on 3-L1/S)
"Voltage Low"	(Average line voltage is less than selected Undervoltage Percentage)
"Voltage High"	(Average line voltage is more than selected Overvoltage Percentage)
"Imbalance"	(One phase is lower than the average voltage by more than the Imbalance percentage)
"Phase Loss	(One phase is more than 30% below the Line Voltage selection)
"Bad Rotation"	(The phase rotation sequence is reversed)
"Bad Freq"	(Line frequency out of allowable range of 45 to 65 Hz)

Filter Replacement
Monthly filter inspection is required to maintain optimum unit efficiency.

⚠ WARNING

Electric shock hazard. Shut off all electrical power to the unit to avoid shock hazard or injury from rotating parts.

It is strongly recommended to replace filter media monthly. Filters are located upstream of the evaporator coil. Open access panel and pull filters straight out to inspect all of the filters. Replace filters with the size indicated on each filter. Arrow on the replacement filters must point towards the blower. Units with an energy recovery wheel with have additional filters. See the Filter replacement section under the energy recover wheel section for more information.

UV Lights
Some units include UV lights for airstream disinfection. The UV fixture is installed directly downstream of cooling coil. Door interlock switches are provided with this option. UV lamps ship loose in the vestibule and require installation during startup.

Useful lamp life shall be 9000 hours (minimum) with no more than a 15% output loss at the end of the lamps life. Use AAON Part # R68850 for lamp replacement.

⚠ WARNING

UV LIGHTS

Never expose eyes or skin to UVC light from any source, as personal injury may result. Wear gloves, face shield/glasses (per ANSI Z87.1) and cover all exposed skin.

Replacement Parts
Parts for AAON equipment may be obtained from your local representative https://www.aaon.com/find-a-rep. When ordering parts, reference the unit serial number and part number.

AAON
Warranty, Service and Parts Department
203 Gum Springs Rd.
Longview, TX 75602
Ph: (918) 382-6450
techsupport@AAON.com
www.AAON.com

Note: Before calling, technician must have model and serial number of the unitavailable for the service department to help answer questions regarding the unit.

Warranty: Refer to the Limited Warranty Certificate for the unit warranty details. Contact your AAON representative for a unit specific copy of the certificate for your serial number.

Limited Warranty Certificate

GENERAL CONDITIONS
AAON Coil Products, Inc. (hereinafter referred to as "ACP") warrants this ACP equipment, as identified hereon, to be free of defects in material and workmanship under normal use, service, and maintenance. Our obligations under this warranty must be limited to repairing or replacing the defective part, or parts, which in our judgment show evidence of such defects. ACP is not liable for labor charges and other costs incurred for removing, shipping, handling or transporting defective part, or parts, or for shipping, handling, transporting, or installing repaired or replacement part, or parts.

The limited warranty is effective one (1) year from date of **original installation**, or eighteen (18) months from date of original shipment from the factory, whichever occurs first and covers all parts and components in this ACP equipment excluding air filters, belts, refrigerant moisture driers, and lost refrigerant, which are not included in any part of this limited warranty. The replacement part, or parts, assume only the unused portion of the original limited warranty and are shipped f.o.b. from the factory and freight prepaid by the factory.

The limited warranty is effective for products manufactured at the Tulsa, Oklahoma or Longview, Texas facility.

THIS LIMITED WARRANTY ONLY APPLIES WHEN THE **ORIGINAL MODEL NUMBER AND SERIAL NUMBER** OF THE ACP UNIT ARE GIVEN AT TIME OF REQUEST FOR REPLACEMENT PART, OR PARTS. DEFECTIVE PART, OR PARTS, MUST BE RETURNED **PREPAID**, WITH ITS ASSIGNED RETURN MATERIAL TAG, WITHIN FOURTEEN (14) DAYS OF RECEIPT OF THE REPLACEMENT PART, OR PARTS.

EXTENDED LIMITED WARRANTY ON COMPRESSORS INCLUDED IN SINGLE PACKAGE EQUIPMENT (NOT INCLUDING CHILLERS); OPTIONAL ON OTHER EQUIPMENT
For the second through the fifth year from date of **shipment**, we further agree to repair or replace the fully hermetic compressor, at our option, for the **original purchase-user only**. The repaired or replacement fully hermetic compressor will be supplied f.o.b. the factory, freight **prepaid and add**, providing the defective fully hermetic compressor is returned **prepaid by the customer**, and is proven to be inoperative due to defects in materials or workmanship. This extended limited warranty covers **only** the fully hermetic compressor and **does not include** any labor charges, or other additional costs incurred for removing, shipping, handling, transporting, or replacing the defective fully hermetic compressor. It also **does not include** additional costs incurred for shipping, handling, or transporting of electric controls such as relays, capacitors, pressure controls, or fan-motor assemblies, condensers, receivers, etc, which carry the standard **one-year limited warranty**.

EXTENDED LIMITED WARRANTY OF M2/V3/H3 SERIES GAS FIRED HEAT EXCHANGERS
For the second through the tenth year from date of original installation, we further warrant the steel heat exchanger against failure due to defects in materials and workmanship for the original purchaser-user only, in accordance with the following: For the first five (5) years from date of shipment, we agree to repair or replace the heat exchanger, at our option, for the original purchaser-user only; during the sixth year, we will charge 50% of the current trade price for repaired or replacement steel heat exchanger, as the case may be, during the seventh year, 60%, during the eighth year, 70% during the ninth year, 80% and during the tenth year, 90%.

In all cases, the repaired or replacement heat exchanger will be supplied f.o.b. our factory, freight prepaid, providing the defective heat exchanger is returned **prepaid**, and if it is proved to be inoperative due to defects in materials and workmanship. This extended limited warranty covers **only** the heat exchanger and **does not include** labor charges, or other costs incurred for removing, shipping, handling, transporting, or installing repaired replacement heat exchanger. This extend limited warranty **does not apply** where the furnace has been operated in an atmosphere contaminated by chlorine, fluorine, or any other damaging chemical compounds.

FOR OPTIONAL FIVE YEAR EXTENDED LIMITED WARRANTY OF COIL COATING
For the second through fifth year from date of shipment, we further warrant the coating of e-coated coils on the equipment against failure due to defects in materials and workmanship for the original purchaser-user only. Coil cleaning, maintenance, and record keeping must be followed according to the unit Installation, Operation and Maintenance Manual to maintain warranty.

OTHER CONDITIONS
This warranty **does not cover** any ACP unit or part thereof which has been subject to accident, negligence, damages in transit, misuse or abuse, **or which has been tampered with or altered in any way**, or which has **not** been installed operated serviced and maintained in accordance with our instructions, or which has been installed outside of the Continental United States or Canada, or on which the serial number or identification number has been altered defaced, or removed. ACP will not be responsible for failure of the unit to start due to voltage conditions, blown fuses, open circuit breakers, or other damages due to the inadequacy or interruption of electric service.

This warranty **does not cover** equipment containing a water-to-refrigerant heat exchanger for any damage resulting from freezing, fouling, corrosion or clogging.

ACP must not be liable for any default or delay in performance hereunder, caused by a contingency beyond its control, including governmental restrictions or restraint, strikes, short or reduced supply of raw materials or parts, floods, winds, fire, lightning strikes, or any other acts of God.

SAMPLE

Limited Warranty Certificate

DISCLAIMERS OF WARRANTIES

THIS WARRANTY IS EXCLUSIVE AND IS IN LIEU OF ANY WARRANTY OF MERCHANTABILITY, FITNESS FOR A PARTICULAR PURPOSE OR OTHER WARRANTY OF QUALITY, WHETHER EXPRESS OR IMPLIED, EXCEPT OF TITLE AND AGAINST PATENT INFRINGEMENT, CORRECTION OF NON-CONFORMITIES ARE LIMITED TO REPAIR OR REPLACEMENT OF THE DEFECTIVE PART OR PARTS, AT SELLER'S OPTION, WHICH MUST CONSTITUTE FULFILLMENT OF ALL TORT OR OTHERWISE IT IS EXPRESSLY UNDERSTOOD THAT ACP MUST NOT BE LIABLE FOR ANY CONSEQUENTIAL OR INCIDENTAL DAMAGES. ACP MUST NOT UNDER ANY CIRCUMSTANCES BE LIABLE FOR SPECIAL, INCIDENTAL OR CONSEQUENTIAL DAMAGES, SUCH AS, BUT NOT LIMITED TO DAMAGES OR LOSS OF OTHER PROPERTY OR EQUIPMENT, LOSS OF PROFITS OR REVENUE, COST OF CAPITAL, COST OF PURCHASED OR REPLACEMENT GOODS, OR CLAIMS OF BUYER OR USER FOR SERVICE INTERRUPTIONS. THE REMEDIES OF THE BUYER SET FORTH HEREIN ARE EXCLUSIVE, AND THE LIABILITY OF ACP WITH RESPECT TO ANY CONTRACT, OR ANYTHING DONE IN CONNECTION THEREWITH SUCH AS THE PERFORMANCE OR BREACH THEREFORE, OR FROM THE MANUFACTURE, SALE, DELIVERY, RESALE, INSTALLATION, OR USE OF ANY GOODS COVERED BY OR FURNISHED UNDER THIS CONTRACT WHETHER ARISING OUT OF CONTRACT, NEGLIGENCE, STRICT TORT, OR UNDER ANY WARRANTY, OR OTHERWISE, MUST NOT EXCEPT AS EXPRESSLY PROVIDED HEREIN, EXCEED THE PRICE OF THE GOODS UPON WHICH SUCH LIABILITY IS BASED.

WITH RESPECT TO THE GOODS SOLD, THE BUYER HEREBY WAIVES ALL LIABILITY ARISING FROM STATUTE, LAW, STRICT LIABILITY IN TORT, OR OTHERWISE, INCLUDING WITHOUT LIMITATION ANY OBLIGATION OF ACP WITH RESPECT TO CONSEQUENTIAL OR INCIDENTAL DAMAGES AND WHETHER OR NOT OCCASIONED BY ACP NEGLIGENCE. TIME LIMIT ON COMMENCING LEGAL ACTIONS: AN ACTION FOR BREACH OF THIS CONTRACT FOR GOOD SOLD OR ANY OTHER ACTION OTHERWISE ARISING OUT OF THIS CONTRACT, MUST BE COMMENCED WITHIN ONE (1) YEAR FROM THE DATE, THE RIGHT, CLAIM, DEMAND OR CAUSE OF ACTION MUST FIRST OCCUR, OR BE BARRED FOREVER.

SEVERABILITY

IF ANY PROVISION OR CAUSE OF THIS CONTRACT OR APPLICATION THEREOF TO ANY PERSON OR CIRCUMSTANCES IS HELD INVALID OR UNCONSCIONABLE SUCH INVALIDITY OR UNCONSCIONABILITY MUST NOT AFFECT OTHER PROVISIONS OR APPLICATIONS OF THE CONTRACT WHICH CAN BE GIVEN EFFECT WITHOUT THE INVALID OR UNCONSCIONABLE PROVISIONS OF THE CONTRACT ARE DECLARED BE SEVERABLE.

EQUIPMENT INFORMATION (REQUIRED)

Job Name: Click or tap here to

Sales Order Number: Click or tap here to enter text.

Unit Tag: Click or tap here to enter text

Date of Shipment: Click or tap here to enter text.

Serial Number: Click or tap here to enter text.

Unit Model Number: Click or tap here to enter text.

SAMPLE

Filter Information

Table 22 - V3 Series A Cabinet Unit Filters

Feature 6B	Qty. Size (cm) [in.]	Type
0	No Pre Filters	
A	(1) 40.6 x 63.5 x 5.1 [16 x 25 x 2]	Pleated MERV 8
B	(1) 40.6 x 63.5 x 10.2 [16 x 25 x 4]	Pleated MERV 8
C		Pleated MERV 11
D		Pleated MERV 13
E		Pleated MERV 14
F	(1) 40.6 x 63.5 x 5.1 and (1) 40.6 x 63.5 x 10.2 [16 x 25 x 2 and 16 x 25 x 4]	Pleated MERV 8 and Pleated MERV 8
G		Pleated MERV 8 and Pleated MERV 11
H		Pleated MERV 8 and Pleated MERV 13
J		Pleated MERV 8 and Pleated MERV 14

Table 23 - V3 Series B Cabinet Unit Filters

Feature 6B	Qty. Size (cm) [in.]	Type
0	No Pre Filters	
A	(1) 61 x 61 x 5.1 [24 x 24 x 2]	Pleated MERV 8
B	(1) 61 x 61 x 10.2 [24 x 24 x 4]	Pleated MERV 8
C		Pleated MERV 11
D		Pleated MERV 13
E		Pleated MERV 14
F	(1) 61 x 61 x 5.1 and (1) 61 x 61 x 10.2 [24 x 24 x 2 and 24 x 24 x 4]	Pleated MERV 8 and Pleated MERV 8
G		Pleated MERV 8 and Pleated MERV 11
H		Pleated MERV 8 and Pleated MERV 13
J		Pleated MERV 8 and Pleated MERV 14

Table 24 - V3 Series C Cabinet Unit Filters

Feature 6B	Qty. Size (cm) [in.]	Type
0	No Pre Filters	
A	(4) 40.6 x 50.8 x 5.1 [16 x 20 x 2]	Pleated MERV 8
B	(4) 40.6 x 50.8 x 10.2 [16 x 20 x 4]	Pleated MERV 8
C		Pleated MERV 11
D		Pleated MERV 13
E		Pleated MERV 14
F	(4) 40.6 x 50.8 x 5.1 and (4) 40.6 x 50.8 x 10.2 [16 x 20 x 2 and16 x 20 x 4]	Pleated MERV 8 and Pleated MERV 8
G		Pleated MERV 8 and Pleated MERV 11
H		Pleated MERV 8 and Pleated MERV 13
J		Pleated MERV 8 and Pleated MERV 14

Table 25 – V3 Series D Cabinet Unit Filters

Feature 6B	(Qty.) Size (cm) [in.]	Type
0	No Unit Filters	
A	(4) 45.7 x 61 x 5.1 [18 x 24 x 2]	Pleated, MERV 8
B	(4) 45.7 x 61 x 10.2 [18 x 24 x 4]	Pleated, MERV 8
C		Pleated, MERV 11
D		Pleated, MERV 13
E		Pleated, MERV 14
F	(4) 45.7 x 61 x 5.1 and (4) 45.7 x 61 x 10.2 [18 x 24 x 2 and 18 x 24 x 4]	Pleated, MERV 8 and Pleated, MERV 8
G		Pleated, MERV 8 and Pleated, MERV 11
H		Pleated, MERV 8 and Pleated, MERV 13
J		Pleated, MERV 8 and Pleated, MERV 14

Table 26 – V3 Series E Cabinet Unit Filters

Feature 6A	(Qty.) Size (cm) [in.]	Type
0	No Unit Filters	
A	(6) 45.7 x 61 x 5.1 [18 x 24 x 2]	Pleated, MERV 8
B	(6) 45.7 x 61 x 10.2 [18 x 24 x 4]	Pleated, MERV 8
C		Pleated, MERV 11
D		Pleated, MERV 13
E		Pleated, MERV 14
F	(6) 45.7 x 61 x 5.1 and (6) 45.7 x 61 x 10.2 [18 x 24 x 2 and 18 x 24 x 4]	Pleated, MERV 8 and Pleated, MERV 8
G		Pleated, MERV 8 and Pleated, MERV 11
H		Pleated, MERV 8 and Pleated, MERV 13
J		Pleated, MERV 8 and Pleated, MERV 14

Table 27 - V3 Series A Cabinet Final Filters

Feature 6C	(Qty.) Size (cm) [in.]	Type
0	No Final Filters	
H	(1) 40.6 x 63.5 x 10.2 [16 x 25 x 4]	Pleated, MERV 8
J		Pleated, MERV 11
K		Pleated, MERV 13
L		Pleated, MERV 14

Table 28 - V3 Series B Cabinet Final Filters

Feature 6C	(Quantity) Size	Type
0	No Final Filters	
H	(1) 61 x 61 x 10.2 [24 x 24 x 4]	Pleated, MERV 8
J		Pleated, MERV 11
K		Pleated, MERV 13
L		Pleated, MERV 14

Table 29 - V3 Series C Cabinet Final Filters

Feature 6C	(Qty.) Size (cm) [in.]	Type
0	No Final Filters	
H	(2) 50.8 x 63.5 x 10.2 [20 x 25 x 4]	Pleated, MERV 8
J		Pleated, MERV 11
K		Pleated, MERV 13
L		Pleated, MERV 14

Table 30 - V3 Series Energy Recovery OA Filters (Feature 13 = A-V)

Unit Size	Qty. Size (cm) [in.]	Type
A	(1) 40.6 x 63.5 x 5.1 [16 x 25 x 2]	Pleated MERV 8
B	(1) 61 x 61 x 5.1 [24 x 24 x 2]	Pleated MERV 8
C	(4) 40.6 x 50.8 x 5.1 [16 x 20 x 2]	Pleated MERV 8
D	(4) 45.7 x 61 x 5.1 [18 x 24 x 2]	Pleated, MERV 8
E	(8) 40.6 x 50.8 x 5.1 [16 x 20 x 2]	Pleated, MERV 8

Refrigerant Piping Diagrams

See the matching Condensing Unit IOM for Piping Diagrams

V3 Series Startup Form

Job Name:_____ Date:_____

Address:_____

Model Number:_____

Serial Number:_____ Tag:_____

Startup Contractor:_____

Address:_____

_____ Phone:_____

Pre Startup Checklist

Installing contractor must verify the following items.	
1. Is there any visible shipping damage?	☐Yes ☐No
2. Is the unit level?	☐Yes ☐No
3. Are the unit clearances adequate for service and operation?	☐Yes ☐No
4. Do all access doors open freely and are the handles operational?	☐Yes ☐No
5. Have all shipping braces been removed?	☐Yes ☐No
6. Have all electrical connections been tested for tightness?	☐Yes ☐No
7. Does the electrical service correspond to the unit nameplate?	☐Yes ☐No
8. On 208/230V units, has transformer tap been checked?	☐Yes ☐No
9. Has overcurrent protection been installed to match the unit nameplate requirement?	☐Yes ☐No
10. Have all set screws on the fans been tightened?	☐Yes ☐No
11. Do all fans rotate freely?	☐Yes ☐No
12. Does the field water piping to the unit appear to be correct per design parameters?	☐Yes ☐No
13. Is all copper tubing isolated so that it does not rub?	☐Yes ☐No
14. Have the damper assemblies been inspected?	☐Yes ☐No
15. Are air filters installed with proper orientation?	☐Yes ☐No
16. Have condensate drain and p-trap been connected?	☐Yes ☐No
17. Is the TXV sensing bulb in the correct location?	☐Yes ☐No
18. Does the TXV sensing bulb have proper thermal contact and is properly insulated?	☐Yes ☐No
19. Is the actual refrigerant charge of the largest circuit in accordance with the required conditioned floor area according to Table 17?	☐Yes ☐No

20. Are ventilation and exhaust openings unobstructed?	☐ Yes ☐ No
21. Are markings, decals, and warnings on unit clearly visible?	☐ Yes ☐ No
22. Are all damaged or illegible markings and warnings replaced?	☐ Yes ☐ No

Ambient Temperature

Ambient Dry Bulb Temperature_____°C/ °F	Ambient Wet Bulb Temperature_____°C/ °F

Voltage

L1-L2	L2-L3	L1-L3	L1-Ground	L2-Ground	L3-Ground

Supply Fan Assembly

Alignment ☐		Check Rotation ☐		Nameplate Amps_____
Number	hp	L1	L2	L3
1				
2				
VFD Frequency_____			VAV Controls_____	

Power Exhaust Fan Assembly

Alignment ☐		Check Rotation ☐		Nameplate Amps_____
Number	hp	L1	L2	L3
1				
2				
VFD Frequency_____			VAV Controls_____	

Energy Recovery Wheel Assembly

Wheels Spin Freely☐		Check Rotation ☐		FLA _____
Number	hp	L1	L2	L3
1				
2				

Dampers

OA Operation Check ☐	Damper Wiring Check ☐	Gears Check ☐
RA Operation Check ☐	Damper Wiring Check ☐	Gears Check ☐
EA Operation Check ☐	Damper Wiring Check ☐	Gears Check ☐
Damper Actuator Type:_____		
Economizer Changeover Type and Operation:_____		

Refrigeration System 1 - Cooling Mode

	Pressure	Saturated Temperature	Line Temperature	Sub-cooling	Superheat
Discharge				N/A	N/A
Suction				N/A	
Liquid					N/A

Refrigeration System 2 - Cooling Mode

	Pressure	Saturated Temperature	Line Temperature	Sub-cooling	Superheat
Discharge				N/A	N/A
Suction				N/A	
Liquid					N/A

Refrigeration System 3 - Cooling Mode

	Pressure	Saturated Temperature	Line Temperature	Sub-cooling	Superheat
Discharge				N/A	N/A
Suction				N/A	
Liquid					N/A

Refrigeration System 4 - Cooling Mode

	Pressure	Saturated Temperature	Line Temperature	Sub-cooling	Superheat
Discharge				N/A	N/A
Suction				N/A	
Liquid					N/A

Compressors/DX Cooling

Check Rotation ☐						
Number	L1	L2	L3	Head Pressure KPA/PSIG	Suction Pressure KPA/PSIG	Crankcase Heater Amps
1						
2						
3						
4						

Air-Cooled Condenser Fans

Alignment ☐		Check Rotation ☐		Nameplate Amps_____
Number	hp	L1	L2	L3
1				
2				
3				
4				

Water/Glycol System

1. Has the entire system been flushed and pressure checked?	☐ Yes ☐ No
2. Has the entire system been filled with fluid?	☐ Yes ☐ No
3. Has air been bled from the heat exchangers and piping?	☐ Yes ☐ No
4. Is the glycol the proper type and concentration (N/A if water)?	☐ Yes ☐ No
5. Is there a minimum load of 50% of the design load?	☐ Yes ☐ No
6. Has the water piping been insulated?	Yes No
7. What is the freeze point of the glycol (N/A if water)?	

Maintenance Log

This log must be kept with the unit. It is the responsibility of the owner and/or maintenance/service contractor to document any service, repair or adjustments. AAON Service and Warranty Departments are available to advise and provide phone help for proper operation and replacement parts. The responsibility for proper startup, maintenance and servicing of the equipment falls to the owner and qualified licensed technician.

Entry Date	Action Taken	Name/Tel.

AAON E-COATED COIL MAINTENANCE RECORD

Installation Site _____ Installation Date _____
Unit Model # _____ Unit Location _____
Unit Serial # _____ Customer _____

Year 20____	Ambient Temp (°F)	Surface Debris Removed	Coil Cleaned	Approved Cleaner Used	Potable Water Backwash Rinse	Potable Water Frontwash Rinse	Chlorides Removed	Comments
Jan								
Feb								
Mar								
Apr								
May								
Jun								
Jul								
Aug								
Sep								
Oct								
Nov								
Dec								

The following cleaning agents have been approved for use on AAON E-Coated Coils to remove mold, mildew, dust, soot, greasy residue, lint and similar particulate without harming the coated surfaces.

CLEANING AGENT	RESELLER	PART NUMBER
GulfClean ™ Coil Cleaner	Rectorseal 2601 Spenwick Drive, Houston, Texas 77055 (P): 713-263-8001	G074480 / 80406
GulfClean Salt Reducer™	" "	G074490 / 80408

RECOMMENDED CHLORIDE REMOVER
Rectorseal 2601 Spenwick Drive, Houston, Texas 77055 (P): 713-263-8001

Literature Change History

November 2022
New V3 Series IOM for UL60335.

May 2023
Added metric conversions equivalents in text and tables. Added new warning labels. Added safety statements from UL 60335. Added KAIC tables for fuse sizing. Removed gas heating information.

October 2023
Added statement 1 about V3 clearances tables. Added they must consider combustible and non-combustible surfaces. Add statement about PARTIAL UNIT AIR CONDITIONERS in section after warning boxes. Added statement in electric heat section about the tested min and max static pressures are between 0.2 – 4.0 inH2O.

May 2024
Additional warnings added. Text added to installation section about proper ventilation requirements. Minimum Floor Area for charge table added. Added "Refrigerant Detection System" for new mitigation board for A2L refrigerant. Additional checklist items added to Startup form. Sentence added to storage section in regards to ASHRAE 15 requirements. Added section about proper Refrigerant removal and Evacuation.

July 2024
Added UV light text and replacement lamp part number. Added text to the RDS section about the "COMP" relay if paired to a condensing unit.

AAON
203 Gum Springs Rd.
Longview, TX 75602-1721
www.AAON.com

V3 Series UL60335 Installation, Operation & Maintenance

G120680 · Rev. B · 240729
(ACP J000096)

Factory Technical Support: 918-382-6450

Note: Before calling Technical Support, please have the model and serial number of the unit available.

Parts: For replacement parts, please contact your local AAON Representative.

It is the intent of AAON to provide accurate and current product information. However, in the interest of product improvement, AAON reserves the right to change pricing, specifications, and/or design of its product without notice, obligation, or liability.

Copyright © AAON, all rights reserved throughout the world.
AAON® and AAONAIRE® are registered trademarks of AAON, Inc., Tulsa, OK.